THIS DRAWING IS UNPUBLISHED.
VERTRAULICHE UNVEROEFFENTLICHTE ZEICHNUNG
© COPYRIGHT 2014 Tyco Electronics AMP GmbH
RELEASED FOR PUBLICATION 2014
FREI FUER VEROEFFENTLICHUNG
ALL RIGHTS RESERVED.
ALLE RECHTE VORBEHALTEN.

MATED WITH:
PASSEND ZU:

PROJEKT NR.: PRJ-11-0000004377

REVISIONS
AENDERUNGEN

P	LTR	DESCRIPTION BESCHREIBUNG	DATE	DWN	APVD
	A	NEW RELEASE	28NOV2014	CR	JK

1 MATERIAL: ITEM NO. 1: HOUSING - CuZn (BRASS, NICKEL PLATED)
ITEM NO. 2: CONTACT BODY - PA
ITEM NO. 3: CONTACT - CuSn (BRONZE)
CONTACT FINISH - Au (GOLD)

2 ALL DIMENSIONS ARE FOR NOMINAL REFERENCE ONLY UNLESS OTHERWISE STATED

TECHNICAL DATA	3-2172078-2	4-2172078-2	5-2172078-2
RATED VOLTAGE	250V	125V	60V
RATED IMPULSE VOLTAGE	2500V	1500V	800V
POLLUTION DEGREE	3	3	3
OVERVOLTAGE CATEGORY	II	II	II
MATERIAL GROUP	III	III	III
RATED CURRENT	4A	4A	2A
VOLUME RESISTIVITY	≤ 3mΩ	≤ 3mΩ	≤ 3mΩ
DEGREE OF PROTECTION	IP68	IP68	IP68
UPPER TEMPERATURE	+85 °C	+85 °C	+85 °C
LOWER TEMPERATURE	-40 °C	+40 °C	+40 °C

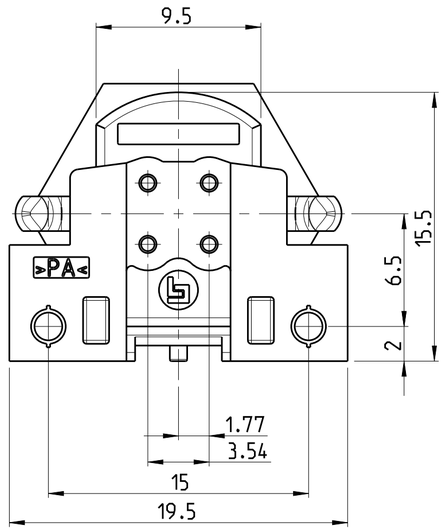

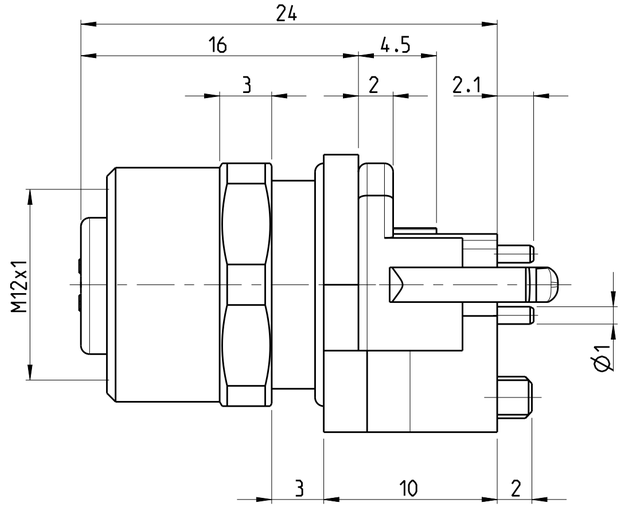

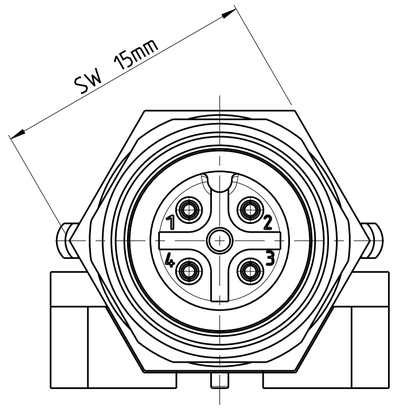

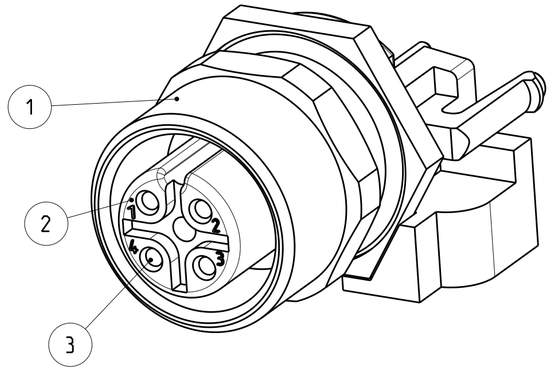

PIN ARRANGEMENT
A-CODING (SCALE 2:1)

3-2172078-2	4-2172078-2	5-2172078-2
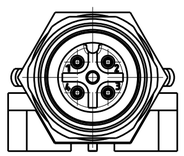	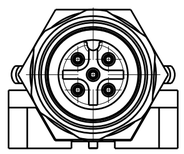	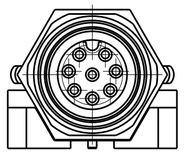

CONDUCTOR LAYOUT

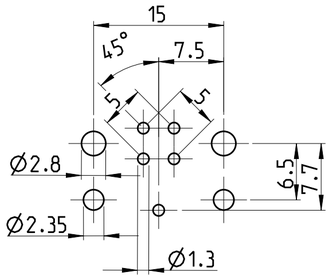

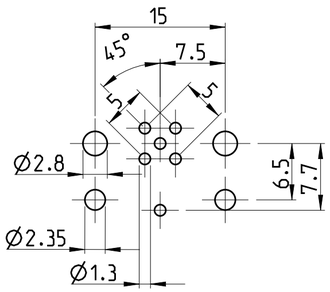

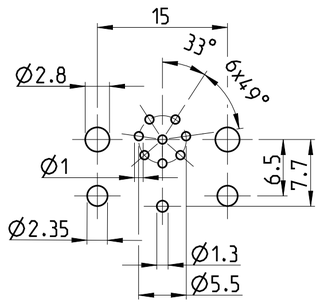

SIZE ISO 14405 (E)

1	8	5-2172078-2
1	5	4-2172078-2
1	4	3-2172078-2
MATERIAL	NUMBER OF POLES	TE-PART-NO.

DIESE ZEICHNUNG IST EIN KONTROLLIERTES DOKUMENT.
BEMASSUNGEN UND TOLERANZEN GEMAESS GPS (ISO STANDARDS).
THIS DRAWING IS A CONTROLLED DOCUMENT.
DIMENSIONING AND TOLERANCING PER GPS (ISO STANDARDS).

DIMENSIONS: MASSEINHEITEN: mm

TOLERANCES UNLESS OTHERWISE SPECIFIED: ALLGEMEINTOLERANZEN
0 PLC ±
1 PLC ±
2 PLC ±
3 PLC ±
4 PLC ±
ANGLES/WINKEL ±

MATERIAL - -
FINISH/OBERFLAECHE/FARBE - -

DWN YASHKUMAR 09AUG2014
CHK M. BRUBAKER 09AUG2014
APVD M. BRUBAKER 09AUG2014
PRODUCT SPEC PRODUKTSPEZ. 108-19483
APPLICATION SPEC VERARBEITUNGSSPEZ. 114-32127
WEIGHT GEWICHT -

TE Connectivity

NAME M12 RECEPTACLE, PCB ASSEMBLY, STRAIGHT, SHIELDED CONNECTOR, A-CODED

SIZE A2 | CAGE CODE 00779 | DRAWING NO ZEICHNUNGS-NR. C-2172078 | RESTRICTED TO NUR FUER -

Customer Drawing /KUNDENZEICHNUNG | SCALE MASSSTAB 2:1 | SHEET BLATT 1 OF VON 1 | REV A

1471-9 (3/13)