THIS DRAWING IS UNPUBLISHED. RELEASED FOR PUBLICATION –,– .
© COPYRIGHT – By – ALL RIGHTS RESERVED.

LOC	DIST
G	14

REVISIONS

P	LTR	DESCRIPTION	DATE	DWN	APVD
	S3	REVISED PER ECO–12–007718	08MAY12	KH	DR

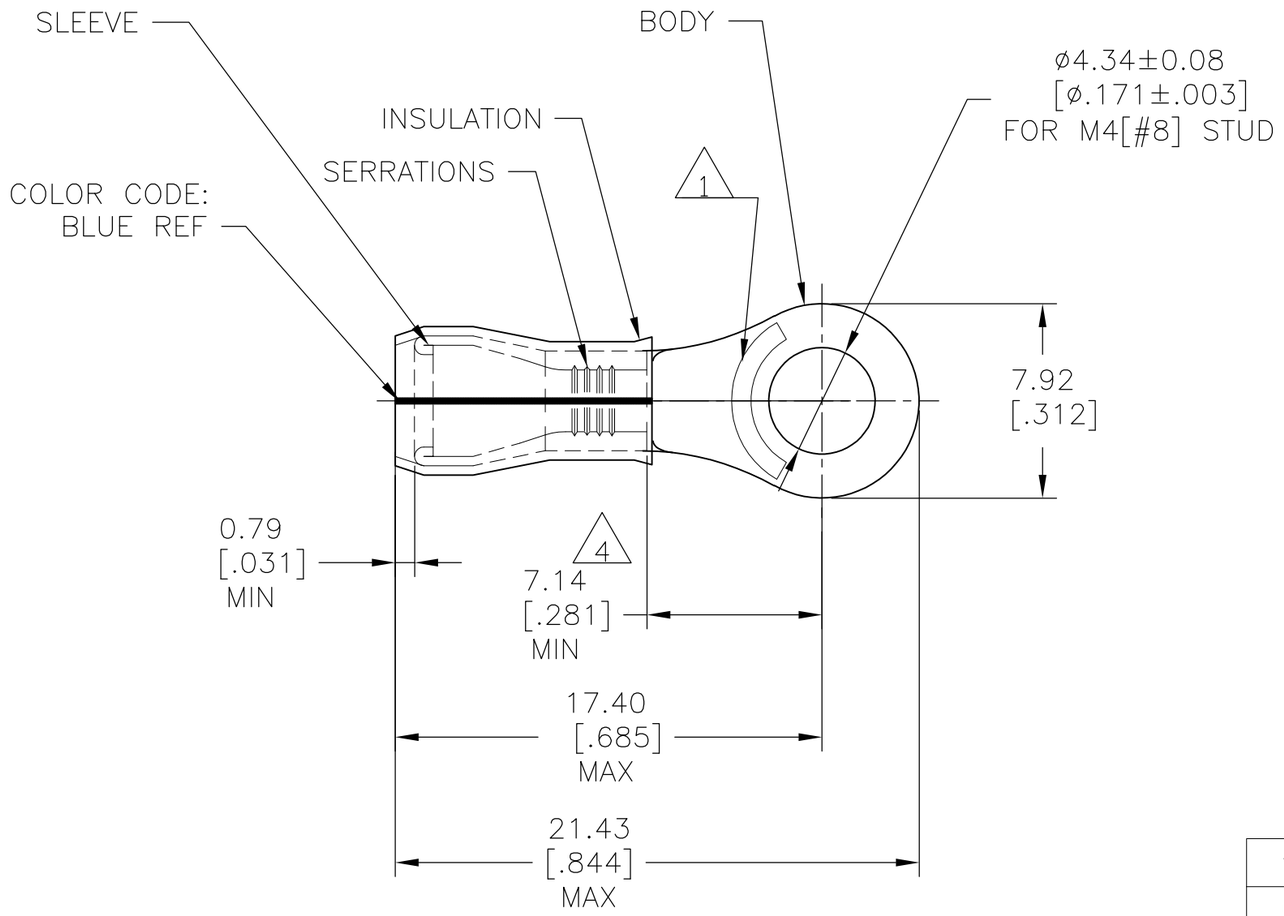

1. STAMP AMP 16–14* APPROX AS SHOWN
2. WIRE INSULATION DIA: 2.67–3.81[.105–.150]
3. TONGUE MATERIAL THK: 0.79±0.05[.031±.002]
4. APPLIES FROM EDGE OF METAL WIRE BARREL TO CENTER OF STUD HOLE.
5. MEETS M7928/4–153, CLASS 1 & 2
   MEETS M7928/13–153, CLASS 1 & 2
6. MEETS M7928/4–153, CLASS 2

QTY	PACKAGE TYPE	MATERIAL & FINISH	PART NO
100	LOOSE PIECE, BOX	SAME AS 53417–1	8–53417–1
5000	ON TAPE, REEL	SAME AS 53417–1	6 53417–2
1000	LOOSE PIECE	BODY: COPPER PER ASTM B152 TIN/LEAD (93–7) PLATE PER ASTM B545 (3% MIN LEAD CONTENT) SLEEVE: COPPER PER ASTM B152 TIN/LEAD (93–7) PLATE PER ASTM B545 (3% MIN LEAD CONTENT) INSULATION: PVF2, COLOR–NATURAL	5 53417–1

AMP INCORPORATED
CUSTOMER SERVICE SYSTEMS

FOR ADDITIONAL PRODUCT INFORMATION OR COPIES OF DRAWINGS AND TECHNICAL DOCUMENTS	PRODUCT INFORMATION CENTER 1–800–522–6752
FOR APPLICATION TOOLING INFORMATION	TOOLING ASSISTANCE CENTER 1–800–722–1111
FOR ORDER ENTRY	1–800–526–5142

THIS DRAWING IS A CONTROLLED DOCUMENT FOR AMP INCORPORATED. IT IS SUBJECT TO CHANGE AND THE CONTROLLING ENGINEERING ORGANIZATION SHOULD BE CONTACTED FOR THE LATEST REVISION.

MAX RECOMMENDED OPERATING TEMPERATURE: 150°C [302°F] MAX

VOLTAGE RATING: N/A

CIRCULAR MIL AREA: 1.04–2.62mm² [2,050–5,180] STRANDED

THIS DRAWING IS A CONTROLLED DOCUMENT.

DIMENSIONS: mm [INCHES]

TOLERANCES UNLESS OTHERWISE SPECIFIED:
0 PLC ± –
1 PLC ± –
2 PLC ± –
3 PLC ± 0.20[.008]
4 PLC ± –
ANGLES ± –

MATERIAL: SEE TABLE

FINISH: SEE TABLE

DWN JR RUTH	25OCT07	
CHK T MICHIELUTTI	25OCT07	
APVD T MICHIELUTTI	25OCT07	
PRODUCT SPEC —		
APPLICATION SPEC —		
WEIGHT —		

TE Connectivity

NAME: TERMINAL, RING TONGUE, PVF2 , P.I.D.G. WIRE SIZE: 16–14 AWG

SIZE	CAGE CODE	DRAWING NO	RESTRICTED TO
A3	00779	C–53417	—

CUSTOMER DRAWING | SCALE 4:1 | SHEET 1 OF 1 | REV S3

1470–19 (3/11)