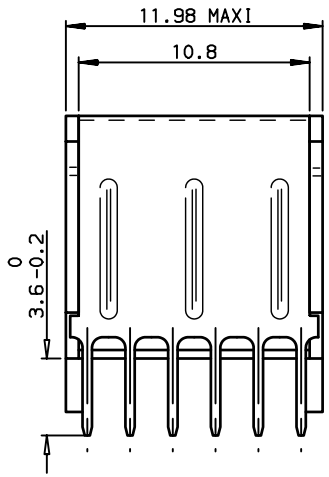

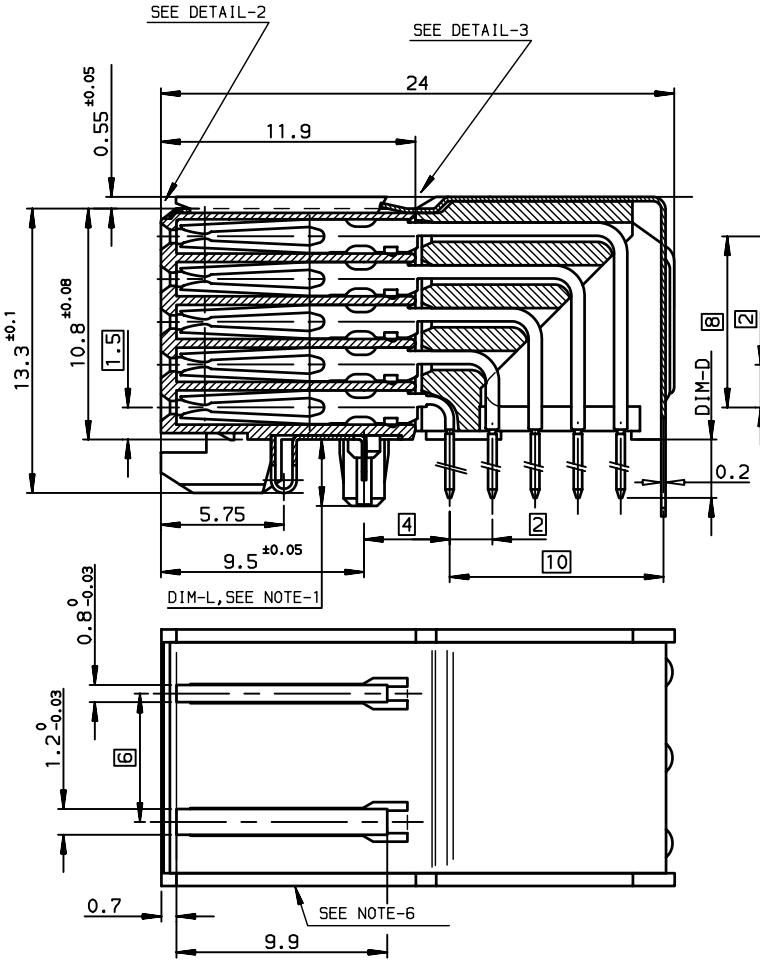

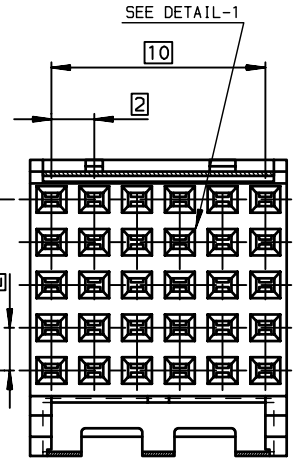

GENERAL CHARACTERISTICS AND ROHS INFORMATIONS:

SEE DRAWING C-8626-0005

PERFORMANCE LEVEL = CLASS-1 OF IEC-61076-4-104 SPEC

NOTE-1: FORCE FIT RETENTION PEG IN THE MIDDLE

NOTE-2: HAND ASSEMBLY IN PCB , POSSIBLE

NOTE-4: DETAIL OF HOLE DIMENSION, SEE DRW C-8626-0000

NOTE-5: FIRST MAKE/LAST BRAKE WITH THIS SHIELDING

NOTE-6: MARKING ON THIS SIDE

DETAIL-3

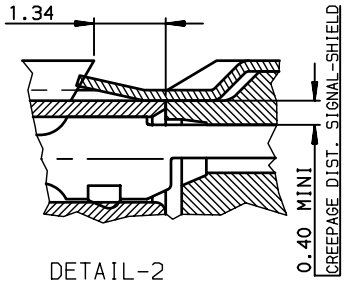

DETAIL-2

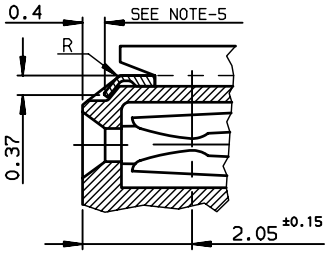

DETAIL-1

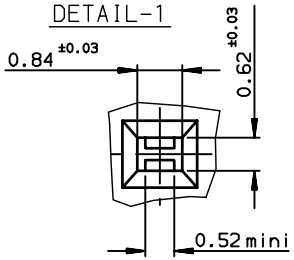

LAYOUT FOR PCB

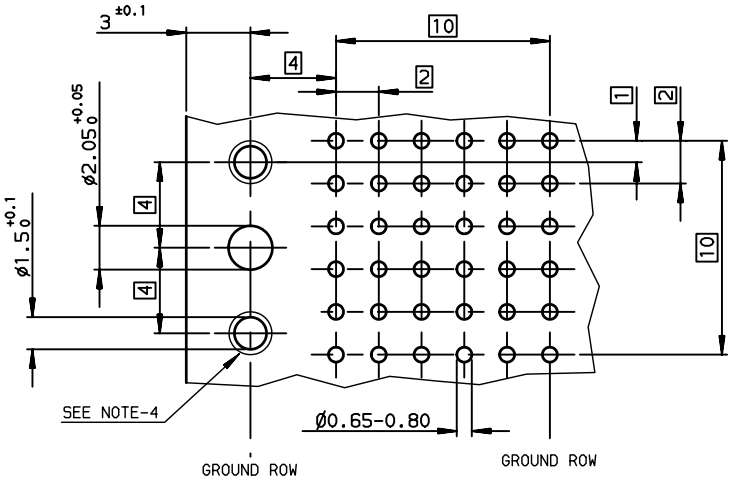

TIN LEAD PART NUMBER

Part Number:	HM1F71FxP000H6	
PCB THICKNESS	D = 2.90 ±0.3	L = 3 ±0.05
e = 1.6 mm	- REPLACE x BY A	
PCB THICKNESS	D = 3.60 ±0.3	L = 3 ±0.05
e = 2.4 mm	- REPLACE x BY B	

LEAD FREE PART NUMBER

Part Number:	HM1F71FxP000H6LF	
PCB THICKNESS	D = 2.90 ±0.3	L = 3 ±0.05
e = 1.6 mm	- REPLACE x BY A	
PCB THICKNESS	D = 3.60 ±0.3	L = 3 ±0.05
e = 2.4 mm	- REPLACE x BY B	

OTHER FEATURES AND DIMENSIONS, SEE DRW C-8626-0099

European Views

rev	ecn no	dr	date
D	-	CHA	1999/03/18
E	LS05-001	MLE	2005/03/15
F	LS06-0095	LGO	2006/07/10
-	-	-	-
-	-	-	-
-	-	-	-
-	-	-	-

www.fciconnect.com

surface ISO 1302 | tolerance std ISO 406 ISO 1101 | projection | mm

TOLERANCES UNLESS OTHERWISE SPECIFIED

Dr	CHAMPION	1993/08/11	ANGULAR	LINEAR	0.X	±0.1
Eng	LENOIR	1993/08/11			0.XX	±0.1
Chr	LEGARE	1993/08/11	0.XX° ±2°		0.XXX	±0.1
Appr	LEGARE	1993/08/11	Product family		METRAL	

size A3 | Scale 4 | ECN LS06-0095 | Spec ref -

title: MILLIPACS-1 FEMALE (5+2)-30 WAYS + 2 SHIELDING-RIGHT ANGLE SOLDER

dwg no C-8626-0097 | Rev. F

catalog no - | CUSTOMER | sheet 1 of 1

Copyright FCI.

REV F - 2006-04-17

PDM: Rev:F STATUS: Released Printed: Sep 29, 2009