THIS DRAWING IS UNPUBLISHED. RELEASED FOR PUBLICATION -,- .
© COPYRIGHT - By - ALL RIGHTS RESERVED.

LOC	DIST
GP	00

REVISIONS

P	LTR	DESCRIPTION	DATE	DWN	APVD
	Z1	REVISED PER ECO-11-004835	11MAR11	RK	HMR

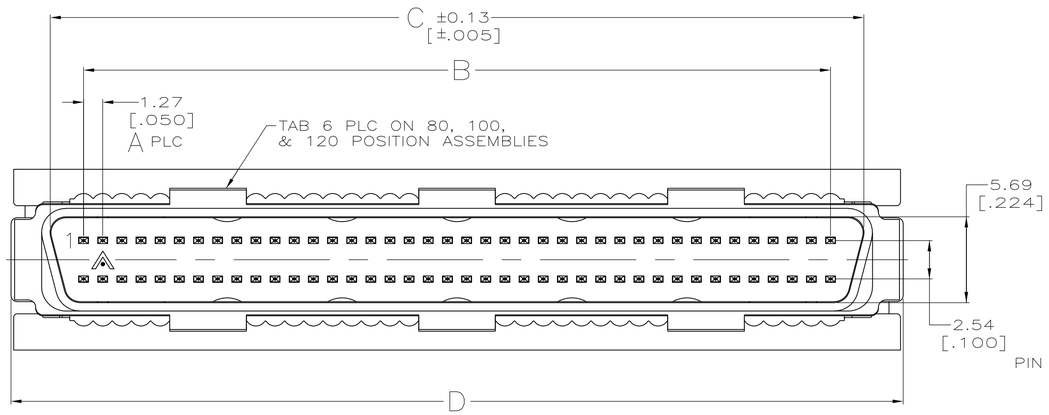

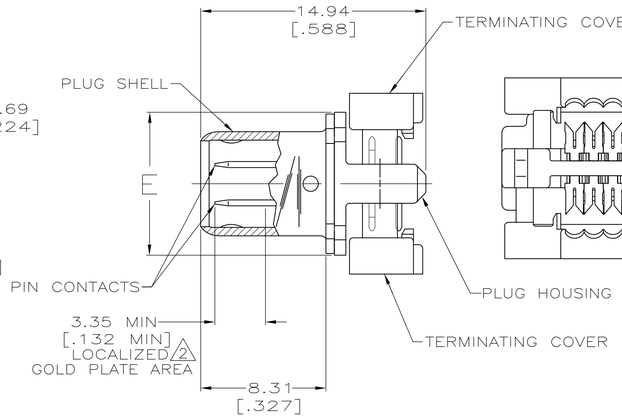

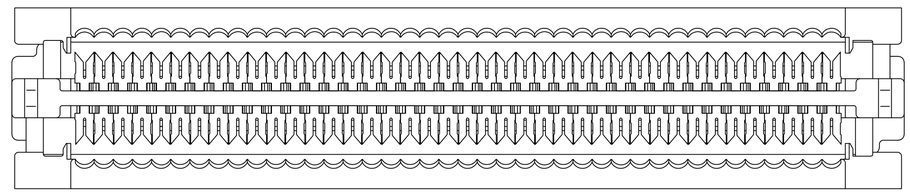

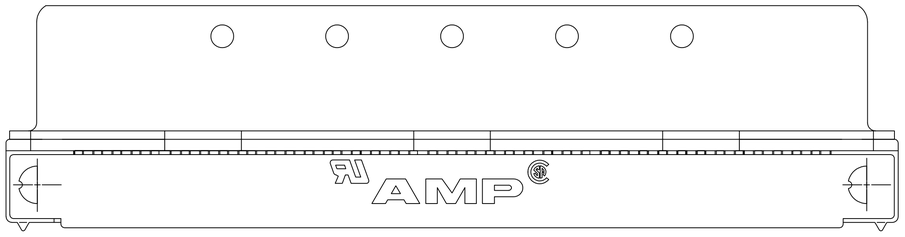

SUPERSEDED BY 5749111-8	4	9.47 [.373]	71.86 [2.829]	66.60 [2.622]	62.23 [2.450]	49	100	1-749111-4
SUPERSEDED BY 5749111-4	4	7.44 [.293]	40.11 [1.579]	34.85 [1.372]	30.48 [1.200]	24	50	1-749111-3
SUPERSEDED BY 5749111-3	4	7.44 [.293]	33.76 [1.329]	28.50 [1.122]	24.13 [.950]	19	40	1-749111-2
OBSOLETE	2	7.44 [.293]	31.22 [1.229]	25.96 [1.022]	21.59 [.850]	17	36	1-749111-1
SUPERSEDED BY 1-5749111-0	2	7.44 [.293]	24.87 [.979]	19.61 [.772]	15.24 [.600]	12	26	1-749111-0
SUPERSEDED BY 5749111-9	2	9.47 [.373]	84.56 [3.329]	79.30 [3.122]	74.93 [2.950]	59	120	749111-9
	2	9.47 [.373]	71.86 [2.829]	66.60 [2.622]	62.23 [2.450]	49	100	749111-8
SUPERSEDED BY 5749111-7	2	9.47 [.373]	59.16 [2.329]	53.90 [2.122]	49.53 [1.950]	39	80	749111-7
	2	7.44 [.293]	51.54 [2.029]	46.28 [1.822]	41.91 [1.650]	33	68	749111-6
OBSOLETE	2	7.44 [.293]	46.46 [1.829]	41.20 [1.622]	36.83 [1.450]	29	60	749111-5
SUPERSEDED BY 5749111-4	2	7.44 [.293]	40.11 [1.579]	34.85 [1.372]	30.48 [1.200]	24	50	749111-4
OBSOLETE	2	7.44 [.293]	33.76 [1.329]	28.50 [1.122]	24.13 [.950]	19	40	749111-3
OBSOLETE	2	7.44 [.293]	26.14 [1.029]	20.88 [.822]	16.51 [.650]	13	28	749111-2
	2	7.44 [.293]	21.06 [.829]	15.80 [.622]	11.43 [.450]	9	20	749111-1
	FINISH	E	D	C	B	A	NO OF POSN	PART NO

1. MATERIAL:
PIN CONTACTS - PHOSPHOR BRONZE.
PLUG SHELL - STEEL.
PLUG HOUSING & TERMINATING COVERS - UL V-O RATED THERMOPLASTIC, COLOR: BLACK.

2. FINISH:
PIN CONTACTS - EITHER 0.76μm [.000030] MIN GOLD PLATE OR GOLD FLASH OVER PALLADIUM NICKEL PLATE, 0.76μm [.000030] MIN TOTAL IN LOCALIZED PLATE AREA, 1.52μm [.000060] MIN TIN-LEAD IN TERMINATION AREA, ALL OVER 1.27μm [.000050] MIN NICKEL.
PLUG SHELL - 0.25μm [.000010] MIN TIN-NICKEL OVER 3.81μm [.000150] MIN NICKEL OVER 2.54μm [.000100] MIN COPPER.

3. RECOMMENDED WIRE: 28 AWG OR 30 AWG, SOLID OR 7 STRAND, PVC INSULATION WITH A 0.74-0.91 [.029-.036] INSULATION DIAMETER.

4. FINISH:
PIN CONTACTS - PLATED WITH EITHER 0.76μm [.000030] MIN GOLD PLATE OR GOLD FLASH OVER PALLADIUM NICKEL PLATE, 0.76μm [.000030] MIN TOTAL IN LOCALIZED PLATE AREA, 3.00μm [.000118] MIN TIN IN TERMINATION AREA, ALL OVER 1.27μm [.000050] MIN NICKEL.
PLUG SHELL - 0.25μm [.000010] MIN TIN-NICKEL OVER 3.81μm [.000150] MIN NICKEL OVER 2.54μm [.000100] MIN COPPER.

THIS DRAWING IS A CONTROLLED DOCUMENT.

DIMENSIONS: mm[INCHES]

TOLERANCES UNLESS OTHERWISE SPECIFIED:
0 PLC ± -
1 PLC ± -
2 PLC ± 0.38 [.015]
3 PLC ± -
4 PLC ± -
ANGLES ± -

MATERIAL 1
FINISH SEE TABLE

DWN M.A.McCAFFREY 11-17-88
CHK M.E.SHIRK 11-17-88
APVD -
PRODUCT SPEC 108-1228
APPLICATION SPEC 114-40029
WEIGHT -

TE Connectivity

NAME PLUG ASSEMBLY, AMPLIMITE .050 Series

SIZE	CAGE CODE	DRAWING NO	RESTRICTED TO
A1	00779	C-749111	-

CUSTOMER DRAWING | SCALE 5:1 | SHEET 1 OF 1 | REV Z1

4805 (3/11)