THIS DRAWING IS UNPUBLISHED. RELEASED FOR PUBLICATION -,- .
© COPYRIGHT - By - ALL RIGHTS RESERVED.

LOC	DIST
GP	00

REVISIONS

P	LTR	DESCRIPTION	DATE	DWN	APVD
	C	REVISED PER ECO-15-007873	18JUN2015	AP	SB

Standardausführung: V23529-Bx121-Bxxx-+
Standardversion

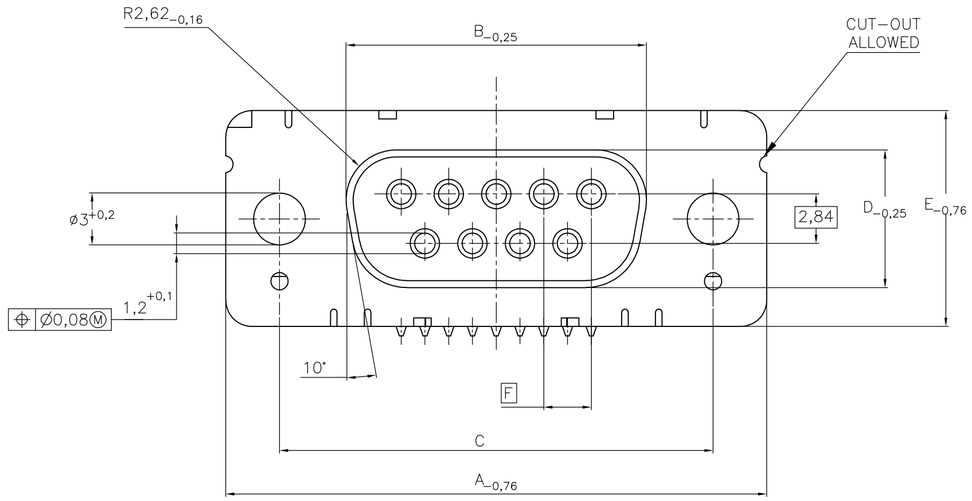

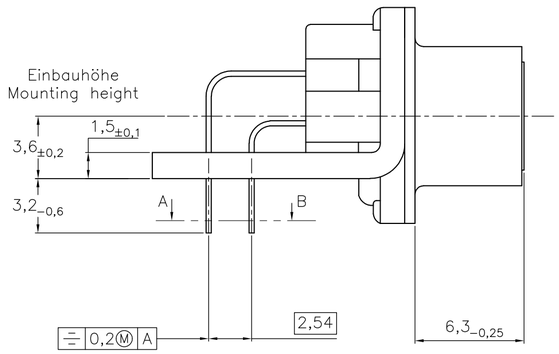

Schnitt AB des Lötanschlusses
Cross-section AB of solderpin
(20:1)

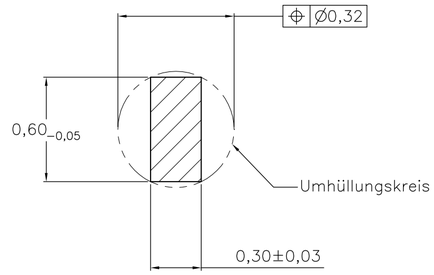

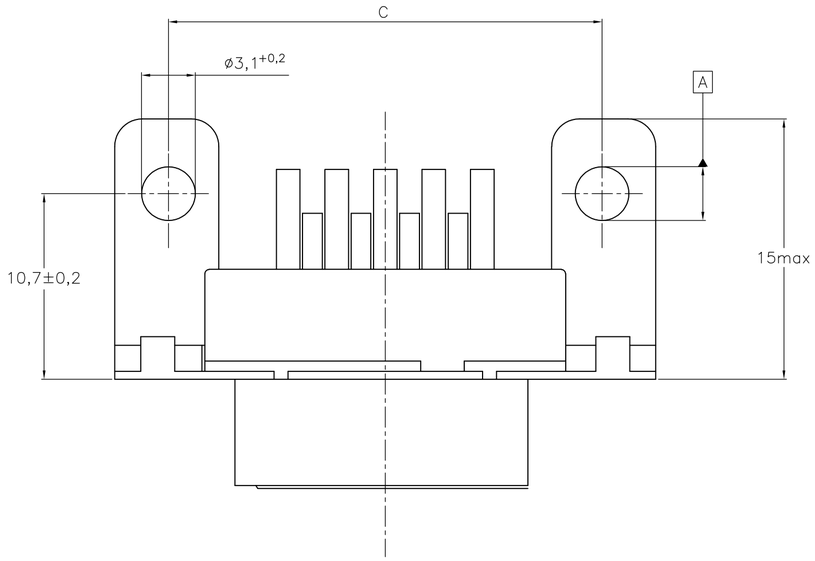

Ordercode Sachnr	Contacts Polzahl	Mass/Dimension A	B	C	D	E	F
..-Bx09-+	09	31,19	16,46	25,0 $^{+0,12}_{-0,13}$	8,02	12,93	2,74
..-Bx15-+	15	39,52	24,79	33,3 $^{+0,15}_{-0,1}$			2,74
..-Bx25-+	25	53,42	38,5	47,04 $^{+0,13}_{-0,13}$			2,76
..-Bx37-+	37	69,7	54,96	63,5 $^{+0,13}_{-0,13}$			2,76

Anforderungsstufe/Performance level 1)

1) nach DIN 41652T.2 und T.4
according to DIN 41652 T.2 AND T.4

OLD PN: V23529-B****-B***-*-7427

THIS DRAWING IS A CONTROLLED DOCUMENT.

DIMENSIONS: mm

TOLERANCES UNLESS OTHERWISE SPECIFIED:
0 PLC ± -
1 PLC ± -
2 PLC ± -
3 PLC ± -
4 PLC ± -
ANGLES ± -

MATERIAL -
FINISH -

DWN GNANI JADAV A E 07JAN10
CHK K. MALCZYK -
APVD K. MALCZYK -
PRODUCT SPEC —
APPLICATION SPEC —
WEIGHT —

TE Connectivity

NAME
Buchsenleiste
Einbauhöhe 3,6 mm (Variante 1) 1)
Socketconnector-90° solderversion (Type1) 1)

SIZE	CAGE CODE	DRAWING NO	RESTRICTED TO
A2	00779	C-1-1393480-7	—

CUSTOMER DRAWING | SCALE 2:1 | SHEET 1 OF 6 | REV C

1-1393480-7

1471-9 (3/11)

THIS DRAWING IS UNPUBLISHED. RELEASED FOR PUBLICATION - , - .
© COPYRIGHT - By - ALL RIGHTS RESERVED.

LOC	DIST
GP	00

REVISIONS

P	LTR	DESCRIPTION	DATE	DWN	APVD
	-	SEE SHEET 1	-	-	-

mit Gewindebolzen: M3 V23529-Bxx24-Bxxx-+
with threadlock 4-40 UNC V23529-Bxx25-Bxxx-+

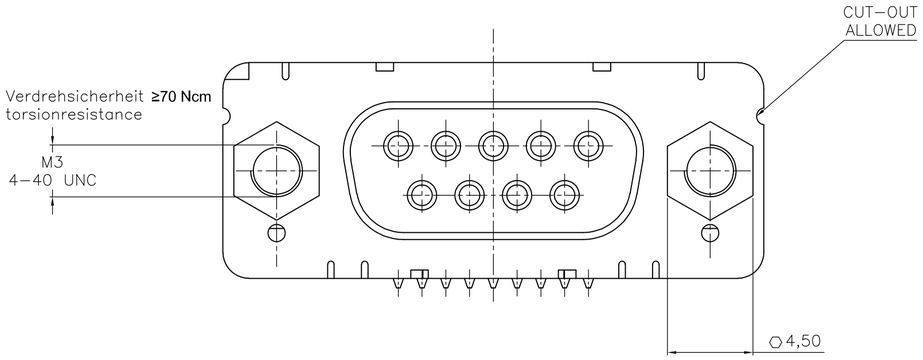

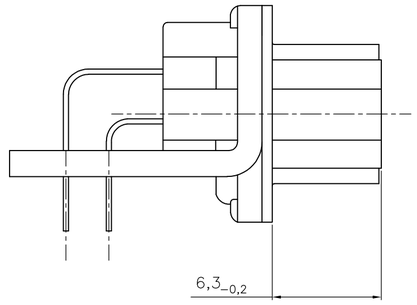

mit Gewinde : M3 V23529-Bxx22-Bxxx-+
with thread 4-40 UNC V23529-Bxx23-Bxxx-+

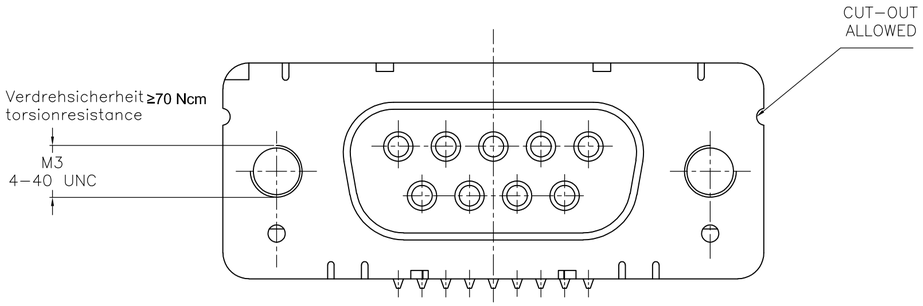

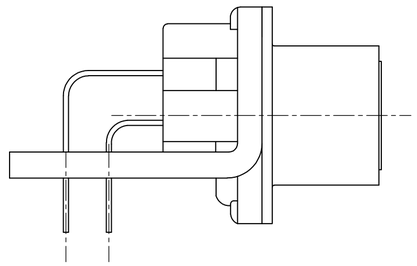

mit clipbefestigung V23529-Bx22x-Bxxx-+
with snap-in

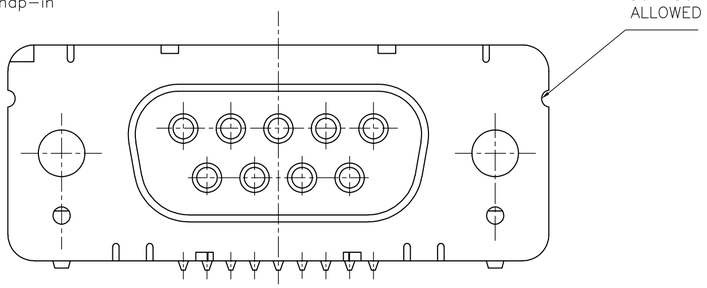

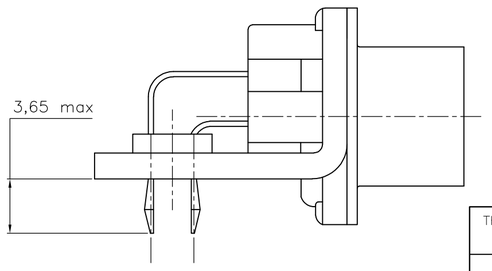

LP-Dicke 1,6±0,13mm, Loch ø3,1+0,2
PC-board-thickness 1,6±0,13mm, Hole ø3,1+0,2

Leiterplattenbohrung
PCB hole pattern

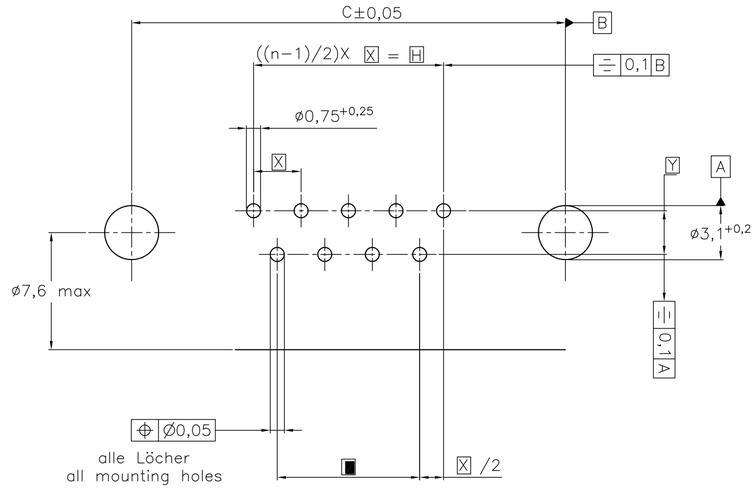

Mass Dimension	Polzahl n Number of contacts n			
	9	15	25	37
C	25	33,3	47,04	63,5
H	10,96	19,18	33,12	49,68
K	8,22	16,44	30,36	46,92
X	2,74	2,74	2,76	2,76
Y	2,54			

1) nach DIN 41652T.2 und T.4
according to DIN 41652 T.2 AND T.4

OLD PN: V23529-B****-B***-*-7427

THIS DRAWING IS A CONTROLLED DOCUMENT.

DIMENSIONS: mm

TOLERANCES UNLESS OTHERWISE SPECIFIED:
0 PLC ± -
1 PLC ± -
2 PLC ± -
3 PLC ± -
4 PLC ± -
ANGLES ± -

MATERIAL -
FINISH -

DWN GNANI JADAV A E 07JAN10
CHK K. MALCZYK -
APVD K. MALCZYK
PRODUCT SPEC —
APPLICATION SPEC —
WEIGHT —

TE Connectivity

NAME
Buchsenleiste
Einbauhöhe 3,6 mm (Variante 1) 1)
Socketconnector-90° solderversion (Type1) 1)

SIZE	CAGE CODE	DRAWING NO	RESTRICTED TO
A2	00779	C-1-1393480-7	—

CUSTOMER DRAWING | SCALE 2:1 | SHEET 2 OF 6 | REV C

1-1393480-7

THIS DRAWING IS UNPUBLISHED. RELEASED FOR PUBLICATION -,- .
© COPYRIGHT - By - ALL RIGHTS RESERVED.

LOC	DIST
GP	00

REVISIONS

P	LTR	DESCRIPTION	DATE	DWN	APVD
	–	SEE SHEET 1	–	–	–

Standardausführung ohne Winkel: V23529–B50x1–Bxxx–+
Standardversion without bracket

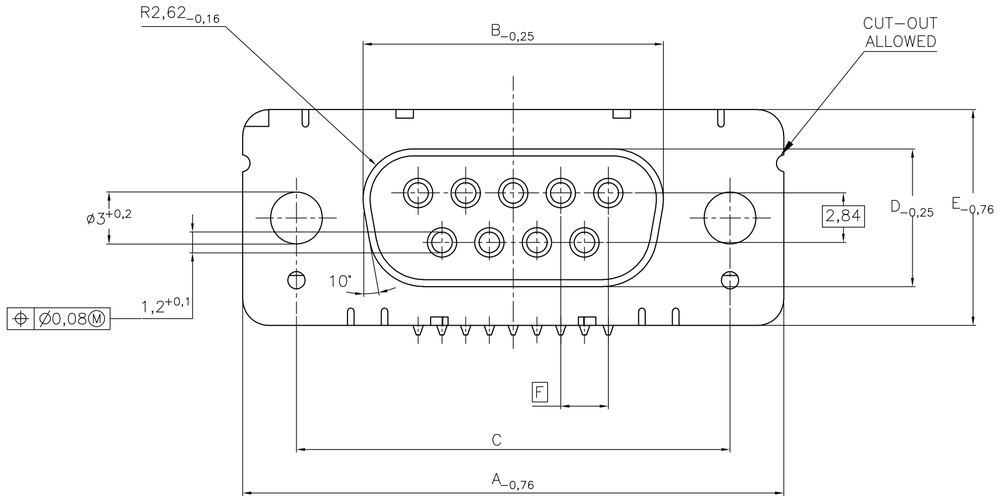

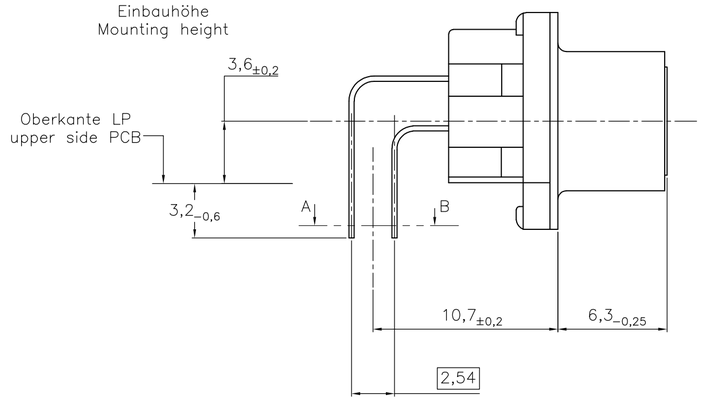

Schnitt AB des Lötanschlusses
Cross–section AB of solderpin
(20:1)

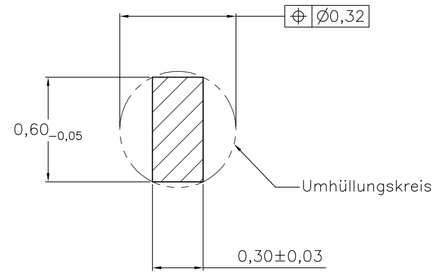

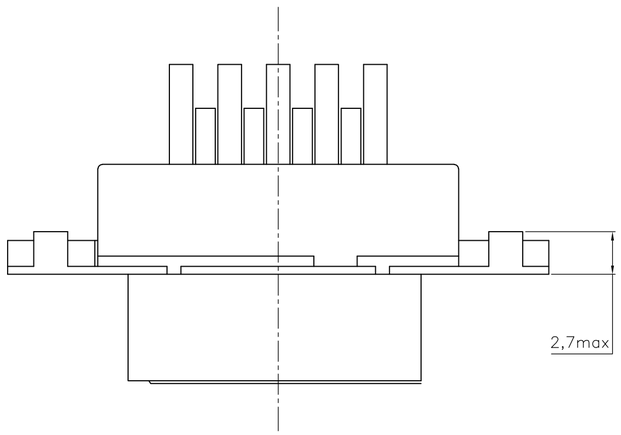

Ordercode Sachnr	Contacts Polzahl	Mass/Dimension					
		A	B	C	D	E	F
..–Bx09–+	09	31,19	16,46	25,0 +0,12 –0,13	8,02	12,93	2,74
..–Bx15–+	15	39,52	24,79	33,3 +0,15 –0,1			2,74
..–Bx25–+	25	53,42	38,5	47,04 +0,13 –0,13			2,76
..–Bx37–+	37	69,7	54,96	63,5 +0,13 –0,13			2,76

Anforderungsstufe/Performance level 1)

OLD PN: V23529–B****-B***–*–7427

1) nach DIN 41652 T.2 und T.4
according to DIN 41652 T.2 AND T.4

THIS DRAWING IS A CONTROLLED DOCUMENT.

DIMENSIONS: mm

TOLERANCES UNLESS OTHERWISE SPECIFIED:
0 PLC ± –
1 PLC ± –
2 PLC ± –
3 PLC ± –
4 PLC ± –
ANGLES ± –

MATERIAL –
FINISH –

DWN 07JAN10 GNANI JADAV A E
CHK – K. MALCZYK
APVD K. MALCZYK
PRODUCT SPEC —
APPLICATION SPEC —
WEIGHT —

TE Connectivity

NAME
Buchsenleiste
Einbauhöhe 3,6 mm (Variante 1) 1)
Socketconnector–90° solderversion (Type1) 1)

SIZE	CAGE CODE	DRAWING NO	RESTRICTED TO
A2	00779	C–1–1393480–7	—

CUSTOMER DRAWING | SCALE 2:1 | SHEET 3 OF 6 | REV C

1–1393480–7

1471–9 (3/11)

THIS DRAWING IS UNPUBLISHED. RELEASED FOR PUBLICATION – , – .
© COPYRIGHT – By – ALL RIGHTS RESERVED.

LOC	DIST
GP	00

REVISIONS

P	LTR	DESCRIPTION	DATE	DWN	APVD
	–	SEE SHEET 1	–	–	–

mit Gewindebolzen: M3 V23529–B50x4–Bxxx–+
with threadlock 4–40 UNC V23529–B50x5–Bxxx–+

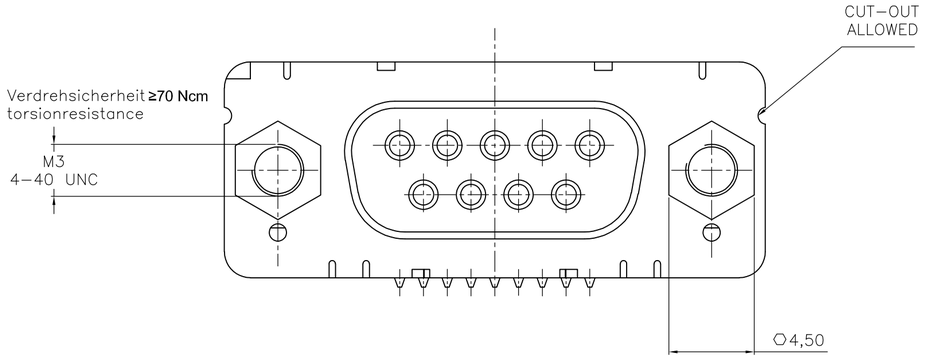

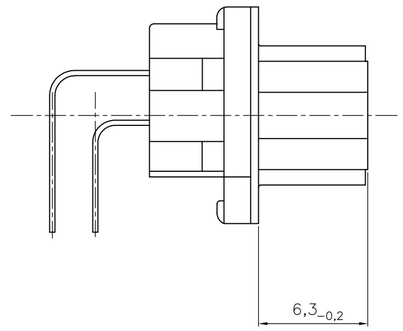

Leiterplattenbohrung
PCB hole pattern

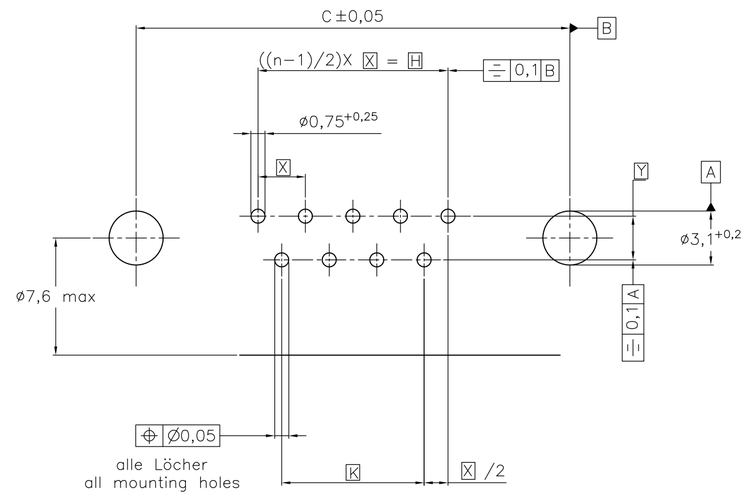

mit Gewinde : M3 V23529–B50x2–Bxxx–+
with thread 4–40 UNC V23529–B50x3–Bxxx–+

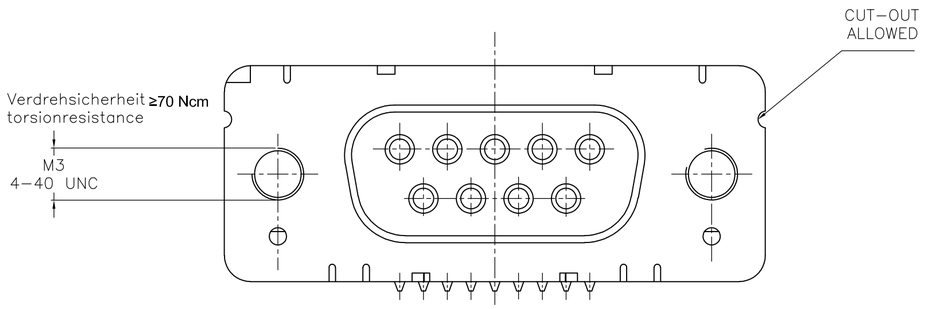

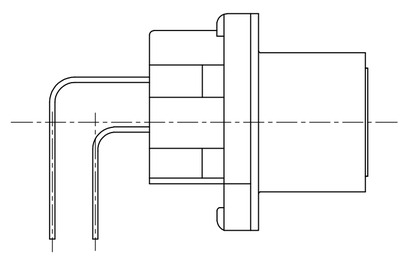

Mass Dimension	Polzahl n Number of contacts n			
	9	15	25	37
C	25	33,3	47,04	63,5
H	10,96	19,18	33,12	49,68
K	8,22	16,44	30,36	46,92
X	2,74	2,74	2,76	2,76
Y	2,54			

1) nach DIN 41652T.2 und T.4
according to DIN 41652 T.2 AND T.4

OLD PN: V23529–B∗∗∗∗–B∗∗∗–∗–7427

THIS DRAWING IS A CONTROLLED DOCUMENT.

DIMENSIONS: mm

TOLERANCES UNLESS OTHERWISE SPECIFIED:
0 PLC ± –
1 PLC ± –
2 PLC ± –
3 PLC ± –
4 PLC ± –
ANGLES ± –

MATERIAL –
FINISH –

DWN GNANI JADAV A E 07JAN10
CHK K. MALCZYK –
APVD K. MALCZYK
PRODUCT SPEC —
APPLICATION SPEC —
WEIGHT —

TE Connectivity

NAME
Buchsenleiste
Einbauhöhe 3,6 mm (Variante 1)[1)]
Socketconnector–90° solderversion (Type1)[1)]

SIZE	CAGE CODE	DRAWING NO	RESTRICTED TO
A2	00779	C–1–1393480–7	—

CUSTOMER DRAWING | SCALE 2:1 | SHEET 4 OF 6 | REV C

1–1393480–7

THIS DRAWING IS UNPUBLISHED. RELEASED FOR PUBLICATION – , – .
© COPYRIGHT – By – ALL RIGHTS RESERVED.

LOC	DIST
GP	00

REVISIONS

P	LTR	DESCRIPTION	DATE	DWN	APVD
	–	SEE SHEET 1	–	—	—

V 2 3 5 2 9 B * * * * – B * * * – +

	Winkelausführung/Beschriftung
1	Metallwinkel/ mit Hersteller–Beschriftung
2	Metallwinkel/ ohne Beschriftung
5	ohne Metallwinkel/ mit Hersteller–Beschriftung

	Leiterplattenbefestigung
0	ohne LP–Befestigung
1	Loch ø3
2	mit Clip
3	mit Gewinde M3

	SUFFIX
–(ohne)	Isolierteil grau RAL 7035
E	Isolierteil grau RAL 7035+ Sonderbeschriftigung E
S	Isolierteil schwarz RAL 9005

	Polzahl
09	9 polig
15	15 polig
25	25 polig
37	37 polig

	Anschlußvarianten
2	Stiellänge 3,2 mm/ Raster 2,54 x 2,76

	Steckerbefestigung
1	Loch ø3
2	Gewinde M3
3	Gewinde 4–40UNC
4	Gewindebolzen M3
5	Gewindebolzen 4–40UNC

	kontaktoberfläche/ Anforderungsstufe
1	Au/Güte I
2	Au OR Au FLASH OVER PdNi/Güte II

	Steckerart
B	Buchsenleiste

OLD PN: V23529–B****–B***–*–7427

1) nach DIN 41652T.2 und T.4
according to DIN 41652 p.2 AND p.4

THIS DRAWING IS A CONTROLLED DOCUMENT.

DIMENSIONS: mm

TOLERANCES UNLESS OTHERWISE SPECIFIED:
0 PLC ± –
1 PLC ± –
2 PLC ± –
3 PLC ± –
4 PLC ± –
ANGLES ± –

MATERIAL –
FINISH –

DWN 07JAN10 GNANI JADAV A E
CHK – K. MALCZYK
APVD K. MALCZYK
PRODUCT SPEC —
APPLICATION SPEC —
WEIGHT —

TE Connectivity

NAME
Buchsenleiste
Einbauhöhe 3,6 mm (Variante 1)[1)]
Socketconnector–90° solderversion (Type1)[1)]

SIZE	CAGE CODE	DRAWING NO	RESTRICTED TO
A2	00779	C–1–1393480–7	—

CUSTOMER DRAWING | SCALE 2:1 | SHEET 5 OF 6 | REV C

1–1393480–7

THIS DRAWING IS UNPUBLISHED. RELEASED FOR PUBLICATION -,- .
© COPYRIGHT - By - ALL RIGHTS RESERVED.

LOC	DIST
GP	00

REVISIONS

P	LTR	DESCRIPTION	DATE	DWN	APVD
	-	SEE SHEET 1	-	-	-

Active part numbers. Contact TE CONNECTIVITY for other configuration availability

Old Part Number	TE CONNECTIVITY Part Number	
V23529-B1121-B209	1-1393480-7	
V23529-B1121-B215	1-1393480-8	OBSOLETE
V23529-B1121-B225	1-1393480-9	
V23529-B1121-B237	2-1393480-0	OBSOLETE
V23529-B1122-B209	2-1393480-8	
V23529-B1122-B215	2-1393480-9	
V23529-B1122-B225	3-1393480-0	OBSOLETE
V23529-B1122-B237	3-1392010-8	
V23529-B1123-B109	3-1393480-4	
V23529-B1123-B209	3-1393480-6	
V23529-B1123-B215	3-1393480-7	
V23529-B1123-B225	3-1393480-8	OBSOLETE
V23529-B1123-B237	3-1393480-9	
V23529-B1125-B209	4-1393480-7	OBSOLETE
V23529-B1125-B215	4-1393480-8	OBSOLETE
V23529-B1125-B225	4-1393480-9	
V23529-B1125-B237	5-1393480-0	OBSOLETE
V23529-B1221-B209	5-1393480-5	
V23529-B1221-B215	5-1393480-6	
V23529-B1221-B225	5-1393480-7	OBSOLETE
V23529-B1222-B109	6-1393480-4	

Old Part Number	TE CONNECTIVITY Part Number	
V23529-B1222-B115	6-1393480-5	
V23529-B1222-B125	6-1393480-6	
V23529-B1222-B209	6-1393480-7	
V23529-B1222-B215	6-1393480-8	OBSOLETE
V23529-B1222-B225	6-1393480-9	OBSOLETE
V23529-B1222-B237	7-1393480-0	OBSOLETE
V23529-B1223-B109	7-1393480-8	
V23529-B1223-B115	7-1393480-9	
V23529-B1223-B125	8-1393480-0	
V23529-B1223-B209	8-1393480-1	
V23529-B1223-B215	8-1393480-2	OBSOLETE
V23529-B1223-B225	8-1393480-3	OBSOLETE
V23529-B1223-B237	8-1393480-4	OBSOLETE
V23529-B1224-B209	9-1393480-0	
V23529-B1224-B215	9-1393480-1	
V23529-B1224-B225	9-1393480-2	OBSOLETE
V23529-B1225-B209	9-1393480-9	
V23529-B1225-B215	1393481-1	OBSOLETE
V23529-B1225-B225	1393481-2	OBSOLETE
V23529-B1225-B237	3-1392010-7	OBSOLETE
V23529-B2221-B209	1-1393481-1	

1) nach DIN 41652 T.2 und T.4
according to DIN 41652 p.2 AND p.4

OLD PN: V23529-B****-B***-*-7427

1-1393480-7

THIS DRAWING IS A CONTROLLED DOCUMENT.

DIMENSIONS: mm

TOLERANCES UNLESS OTHERWISE SPECIFIED:
0 PLC ± -
1 PLC ± -
2 PLC ± -
3 PLC ± -
4 PLC ± -
ANGLES ± -

MATERIAL -

FINISH -

DWN GNANI JADAV A E 07JAN10
CHK K. MALCZYK -
APVD K. MALCZYK
PRODUCT SPEC —
APPLICATION SPEC —
WEIGHT —

TE Connectivity

NAME
Buchsenleiste
Einbauhöhe 3,6 mm (Variante 1)[1)]
Socketconnector-90° solderversion (Type1)[1)]

SIZE	CAGE CODE	DRAWING NO	RESTRICTED TO
A2	00779	C-1-1393480-7	—

CUSTOMER DRAWING | SCALE 2:1 | SHEET 6 OF 6 | REV C