THIS DRAWING IS UNPUBLISHED. RELEASED FOR PUBLICATION -,- .
© COPYRIGHT - By - ALL RIGHTS RESERVED.

LOC	DIST
AF	50

REVISIONS

P	LTR	DESCRIPTION	DATE	DWN	APVD
	J	REVISED PER ECR-12-013459	28NOV2012	KH	PD

1 CONTINUOUS STRIP ON REELS.

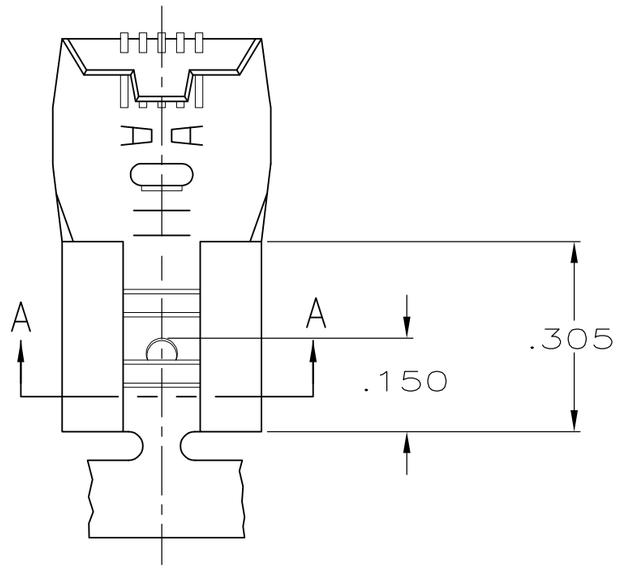

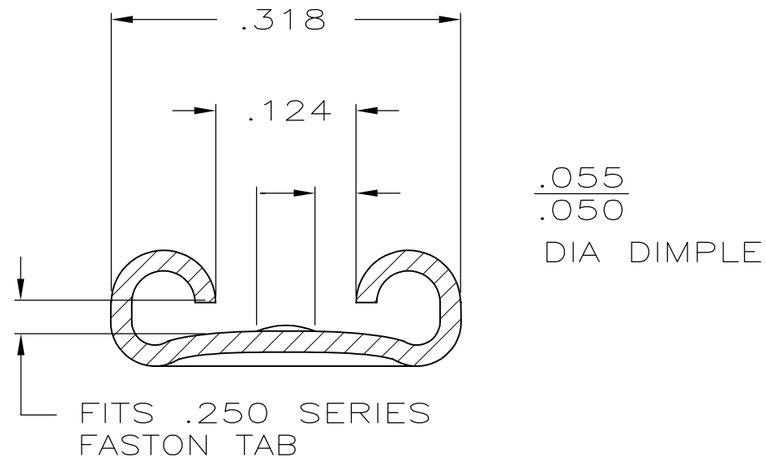

SECTION A–A

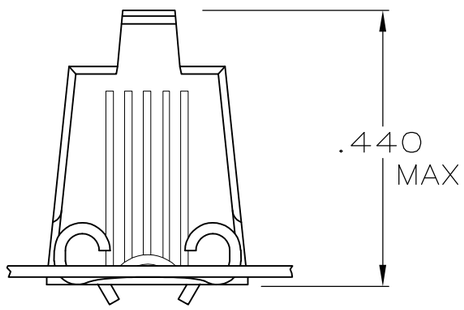

WIRE SIZE	TAB THK	FINISH	MATERIAL	PART NO
12–10	.032 ±.001	TIN	BRASS	62022–2
12–10	.032 ±.001	SILVER	.018 PHOS. BRONZE	62022–1

THIS DRAWING IS A CONTROLLED DOCUMENT.

DIMENSIONS: INCHES

TOLERANCES UNLESS OTHERWISE SPECIFIED:

0 PLC	± –
1 PLC	± –
2 PLC	± –
3 PLC	± .015
4 PLC	± –
ANGLES	± –

MATERIAL: SEE TABLE

FINISH: SEE TABLE

DWN	JR RUTH	2/3/86
CHK	M FEHER	2/6/86
APVD	C MEYERS	2/7/86
PRODUCT SPEC	—	
APPLICATION SPEC	—	
WEIGHT	—	

TE Connectivity

NAME: .250 SERIES FLAG FASTON RECEPTACLE

SIZE	CAGE CODE	DRAWING NO	RESTRICTED TO
A3	00779	C-62022	—

CUSTOMER DRAWING

SCALE	SHEET	REV
NTS	1 OF 1	J