REV.	DESCRIPTION	DATE	BY	APPROVED
1	PRELIMINARY RELEASE	12/20/2007	D.F.	B.M.B.
2	INITIAL RELEASE	5/14/2008	D.M.F.	B.M.B.

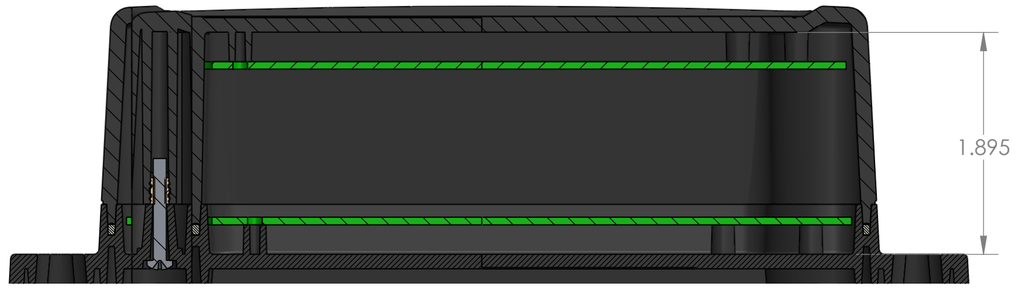

SECTION A-A

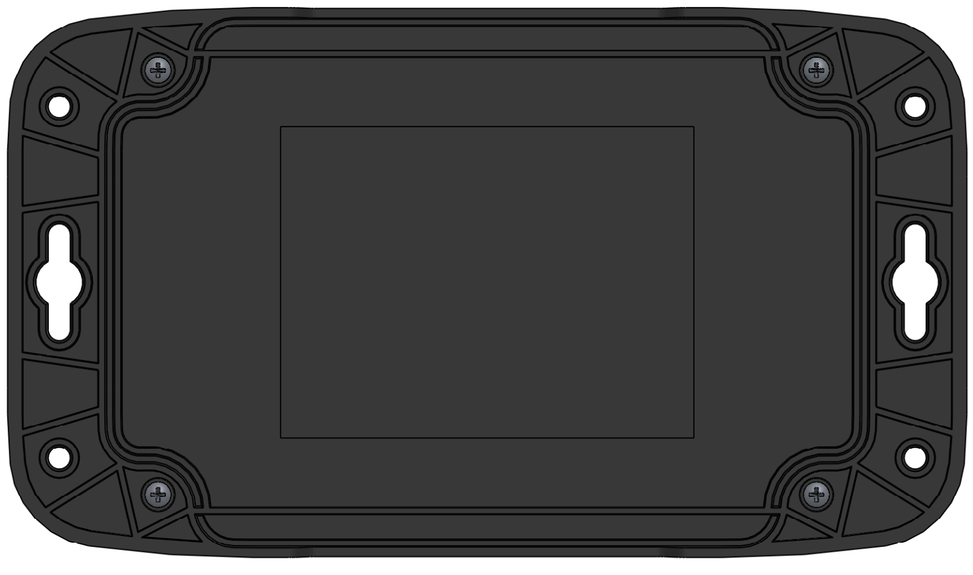

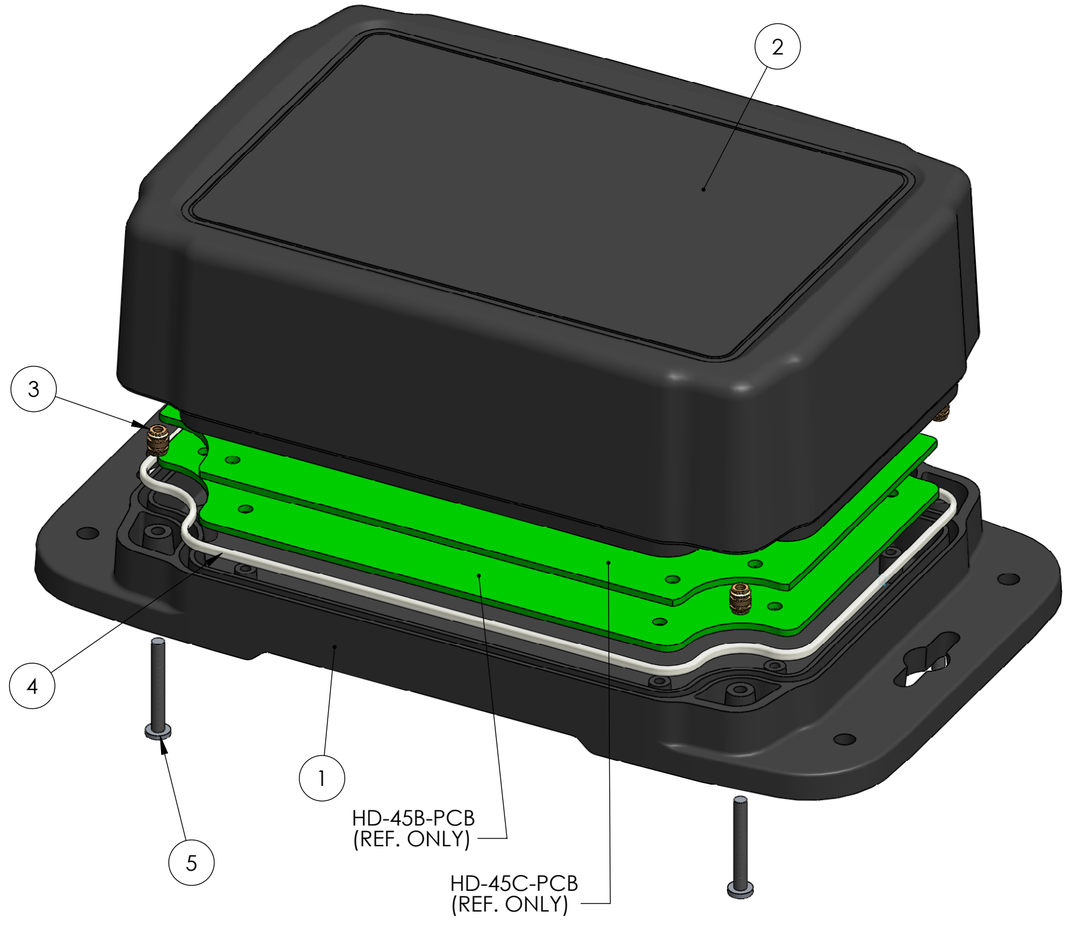

ITEM NO.	PART NUMBER	DESCRIPTION	QTY.
5	SCREWS-SS7/8	PAN HEAD, 4-40 x .875 LG, STAINLESS STEEL	4
4	GASKET-45*08	SILICONE RUBBER GASKET	1
3	INSERTS-2	THREADED BRASS INSERT: 4-40 TH'D	4
2	HD-45CMBT	COVER	1
1	HD-45BFMB	BASE	1

BOM Table

NOTES:
1. PCB BOSSES WILL ACCEPT A #4 X .250 LONG THREAD FORMING SCREW (SCREWS AVAILABLE FROM POLYCASE)
2. ENCLOSURE DESIGNED TO MEET NEMA 4X / IP66
3. MATERIAL: UV STABILIZED & FLAME RETARDANT POLYCARBONATE
4. RECOMMENDED TORQUE SETTING FOR ASSEMBLY SCREWS: 6.25 IN-LBS

UNLESS OTHERWISE SPECIFIED:
DIMENSIONS ARE IN: INCHES[mm]
TOLERANCES: ANGULAR: ±2°
TWO PLACE DECIMAL: ±.03
THREE PLACE DECIMAL: ±.015

PROPRIETARY AND CONFIDENTIAL
THE INFORMATION CONTAINED IN THIS DRAWING IS THE SOLE PROPERTY OF POLYCASE. ANY REPRODUCTION IN PART OR AS A WHOLE WITHOUT THE WRITTEN PERMISSION OF POLYCASE IS PROHIBITED.

CAD FILE: HD-45 Assembly

DWG. NO.
HD-45FMMT

PRODUCT
-

CLIENT
-

	NAME	DATE
DRAWN	D.M.F.	12/20/2007
CHECKED	B.M.B.	12/20/2007

POLYCASE™
YOUR PERFECT FIT
1305 CHESTER IND. PARKWAY AVON, OHIO 44011-1083 U.S.A.
PH#: 1-800-248-1233, 440-934-0444 FAX#: 440-934-0088

SIZE C

TITLE:
PRODUCT DETAIL DRAWING

REV 2

SCALE: 1:1

SHEET 1 OF 1

REV.	DESCRIPTION	DATE	BY	APPROVED
1	PRELIMINARY RELEASE	12/20/2007	D.F.	B.M.B.
2	INITIAL RELEASE	5/14/2008	D.M.F.	B.M.B.

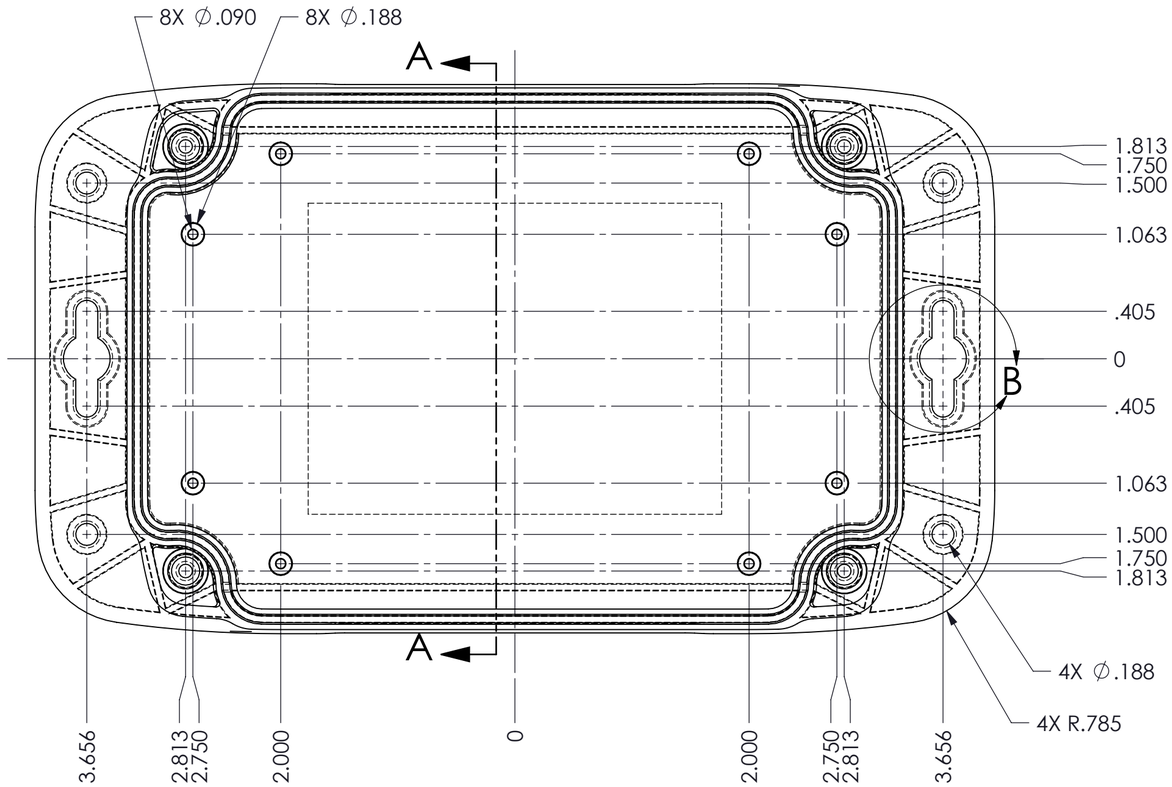

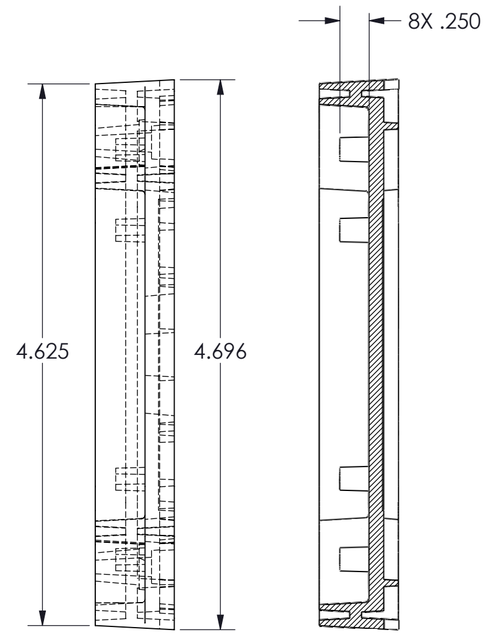

SECTION A-A

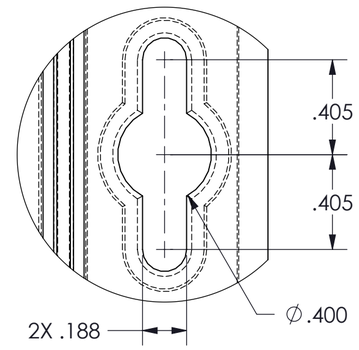

DETAIL B
SCALE 2 : 1
(2 PLCS.)

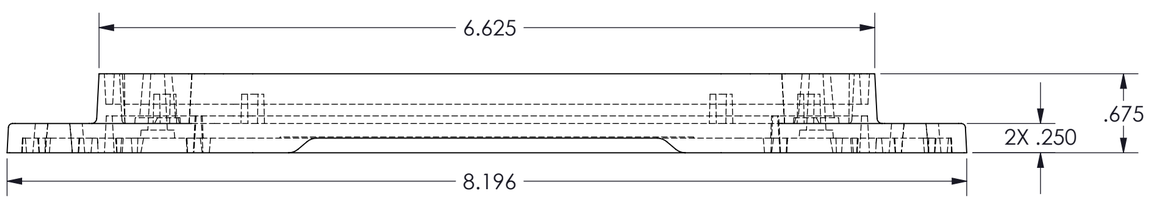

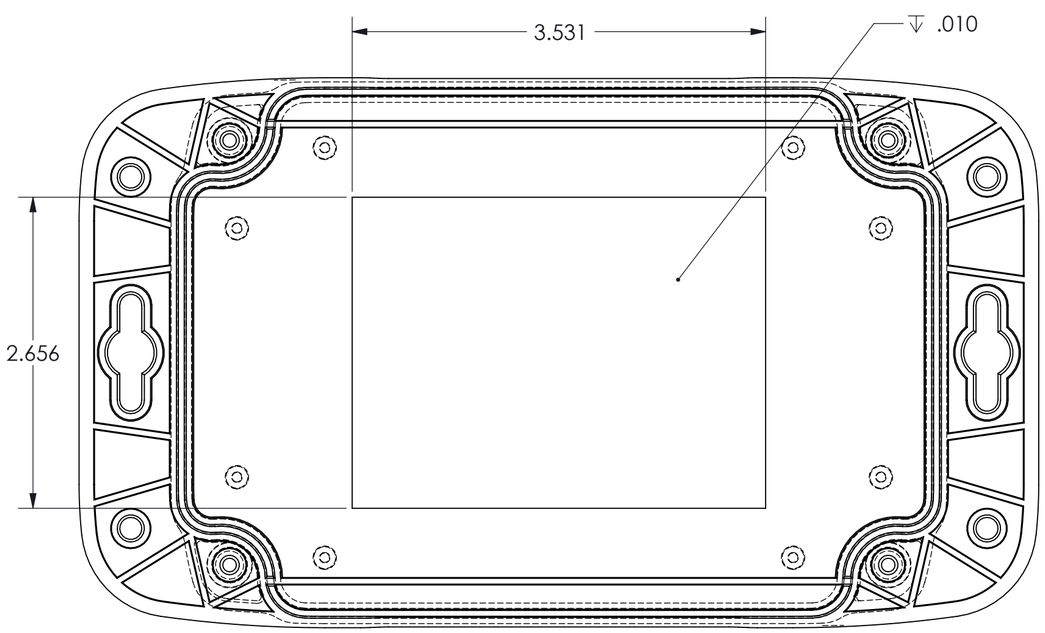

NOTES:
1. PCB BOSSES WILL ACCEPT A #4 X .250 LONG THREAD FORMING SCREW (SCREWS AVAILABLE FROM POLYCASE)

UNLESS OTHERWISE SPECIFIED:
DIMENSIONS ARE IN: INCHES[mm]
TOLERANCES: ANGULAR: ±2°
TWO PLACE DECIMAL: ±.03
THREE PLACE DECIMAL: ±.015

PROPRIETARY AND CONFIDENTIAL
THE INFORMATION CONTAINED IN THIS DRAWING IS THE SOLE PROPERTY OF POLYCASE. ANY REPRODUCTION IN PART OR AS A WHOLE WITHOUT THE WRITTEN PERMISSION OF POLYCASE IS PROHIBITED.

CAD FILE: HD-45B

DWG. NO. HD-45BFMB
PRODUCT -
CLIENT -

	NAME	DATE
DRAWN	D.M.F.	12/20/07
CHECKED	B.M.B.	12/20/07

POLYCASE™
YOUR PERFECT FIT
1305 CHESTER IND. PARKWAY AVON, OHIO 44011-1083 U.S.A.
PH#: 1-800-248-1233, 440-934-0444 FAX#: 440-934-0088

SIZE C
TITLE: PRODUCT DETAIL DRAWING
REV 2
SCALE: 1:1
SHEET 1 OF 1

BOM Table		
ITEM NO.	PART NUMBER	QTY.
1	HD-45CMBT	1
2	INSERTS-2	4

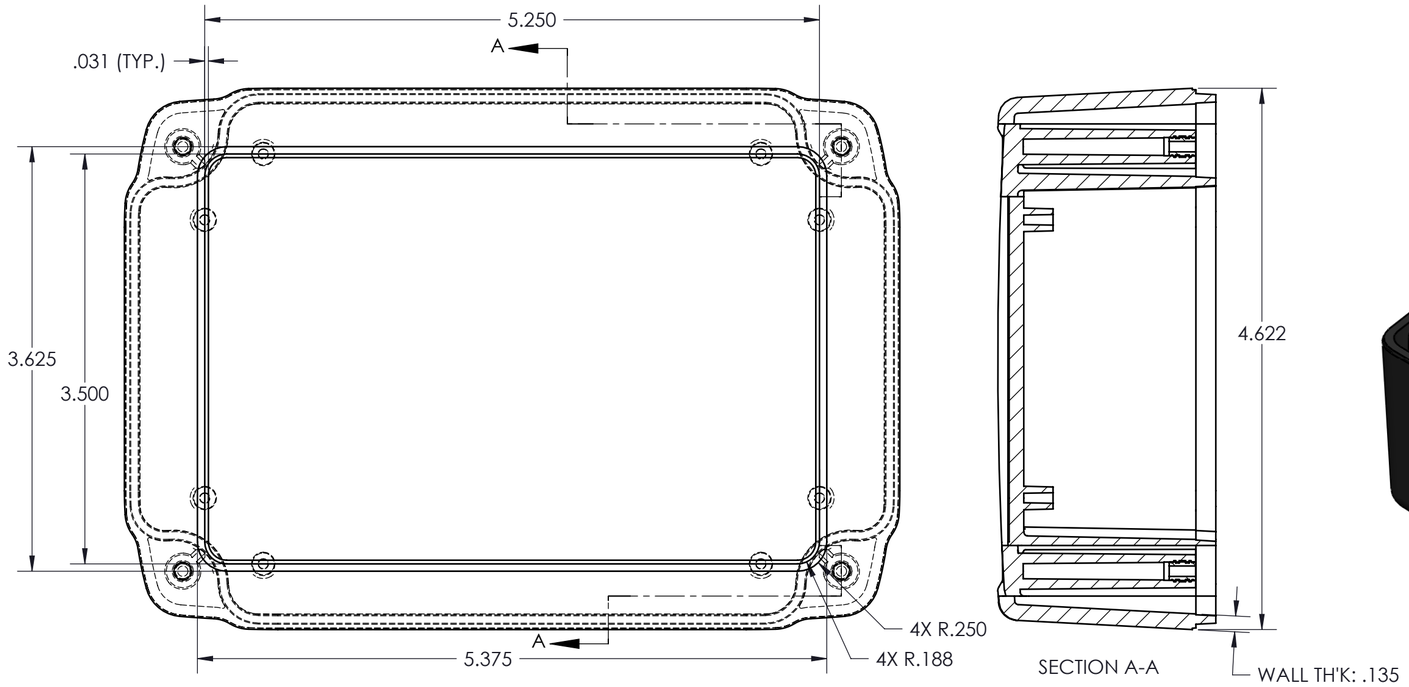

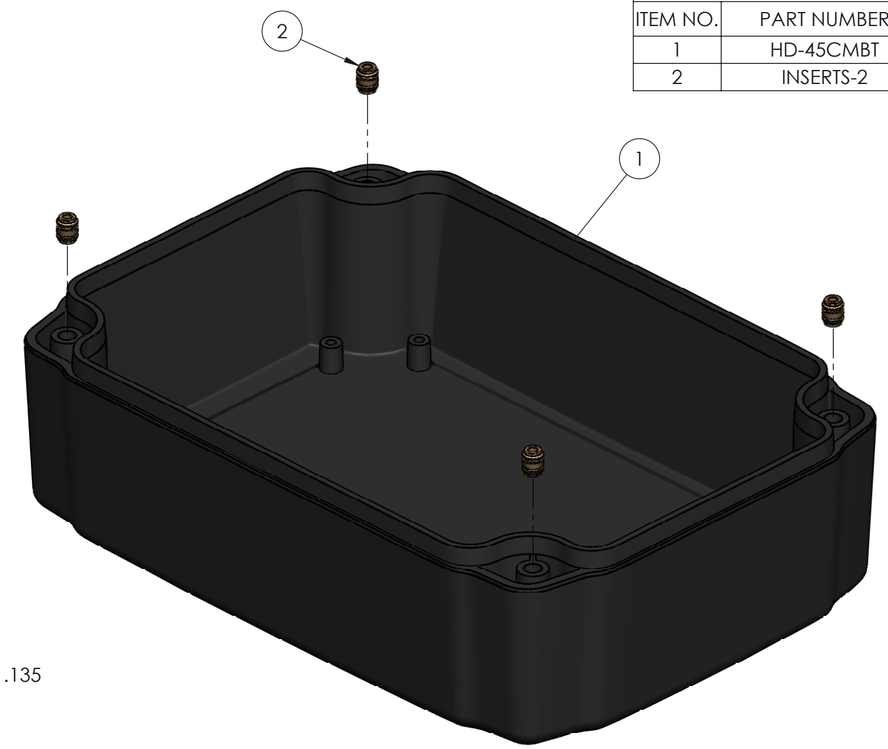

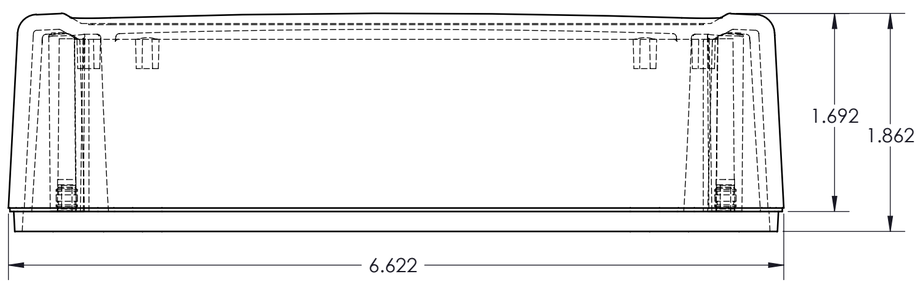

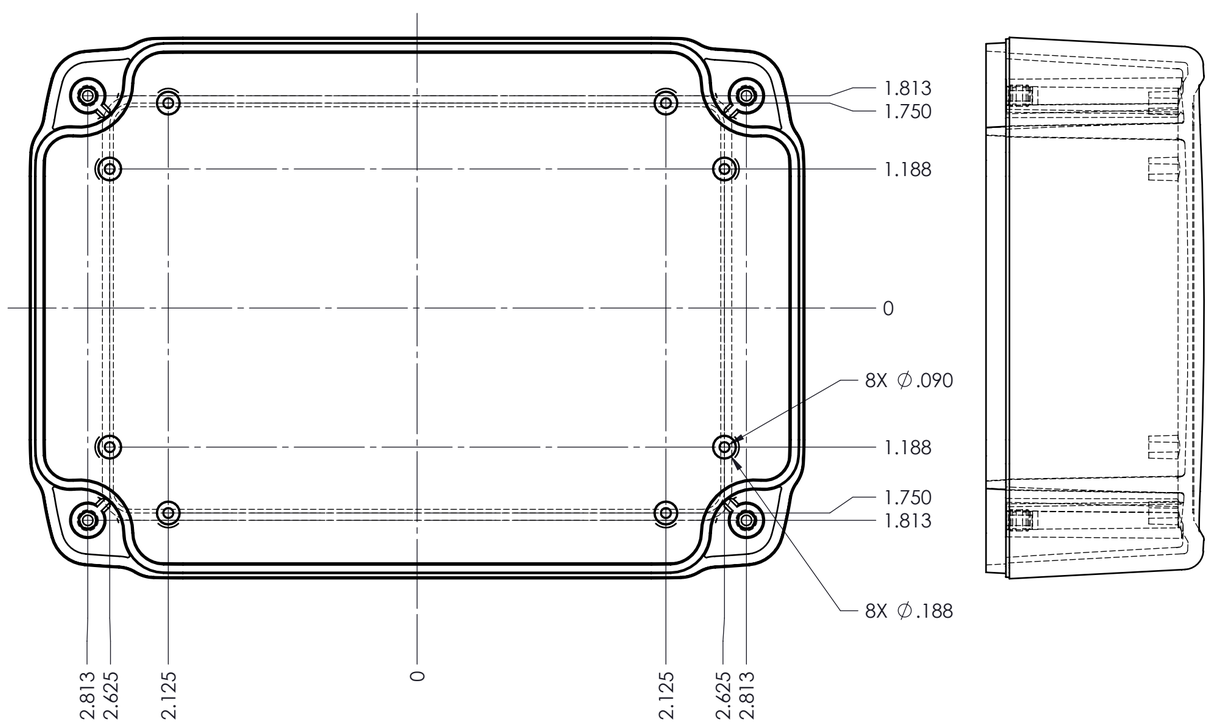

NOTES:
1. PCB BOSSES WILL ACCEPT A #4 X .250 LONG THREAD FORMING SCREW (SCREWS AVAILABLE FROM POLYCASE)

ZONE	REV.	DESCRIPTION	BY	APPR'D	DATE
	1	INITIAL RELEASE	D.M.F.	B.M.B.	5/13/2008

REVISIONS

UNLESS OTHERWISE SPECIFIED:
DIMENSIONS ARE IN: INCHES[mm]
TOLERANCES: ANGULAR: ±2°
TWO PLACE DECIMAL: ±.03
THREE PLACE DECIMAL: ±.015

PROPRIETARY AND CONFIDENTIAL
THE INFORMATION CONTAINED IN THIS DRAWING IS THE SOLE PROPERTY OF POLYCASE. ANY REPRODUCTION IN PART OR AS A WHOLE WITHOUT THE WRITTEN PERMISSION OF POLYCASE IS PROHIBITED.

CAD FILE: HD-45CMBT SUB-ASS'Y

DWG. NO.
HD-45CMBT

PRODUCT
-

CLIENT
-

	NAME	DATE
DRAWN	D.M.F.	12/20/2007
CHECKED	B.A.B.	12/20/2007

POLYCASE™
YOUR PERFECT FIT
1305 CHESTER IND. PARKWAY AVON, OHIO 44011-1083 U.S.A.
PH#: 1-800-248-1233, 440-934-0444 FAX#: 440-934-0088

SIZE C

TITLE:
PRODUCT DETAIL DRAWING

REV 1

SCALE: 1:1

SHEET 1 OF 1

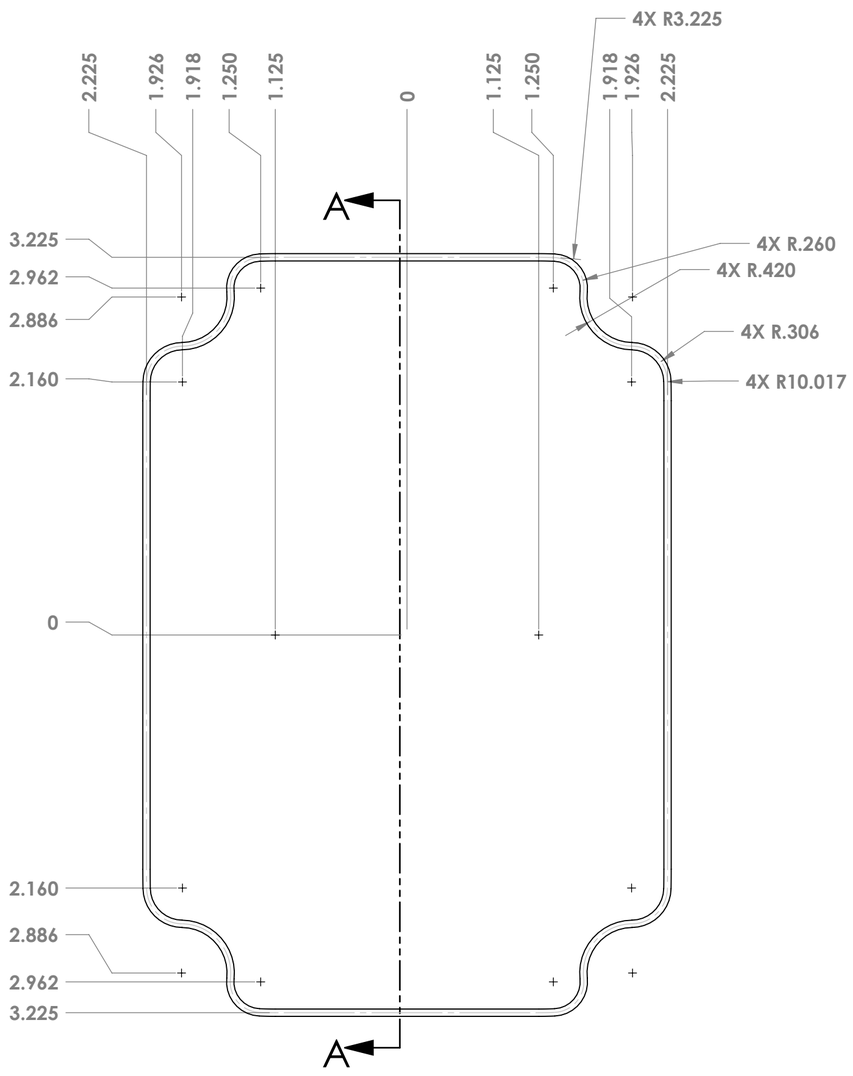

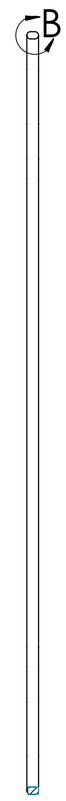

SECTION A-A

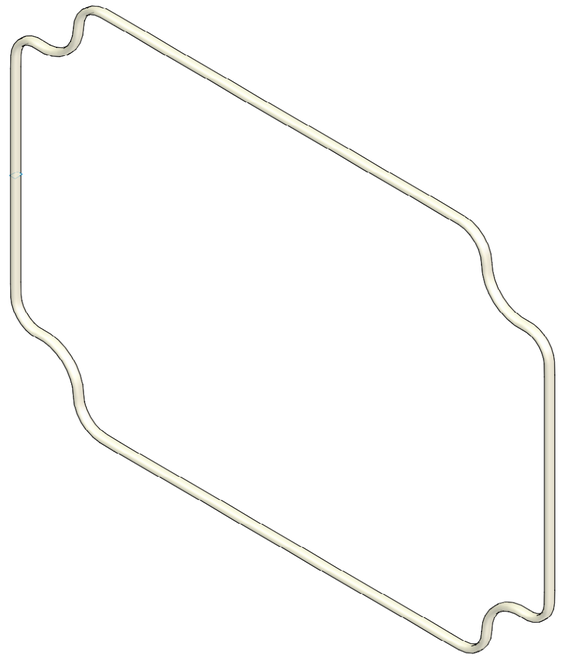

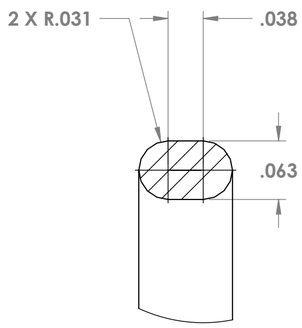

DETAIL B
SCALE 8 : 1

NOTES:
1. MAT'L: SILICONE RUBBER
2. COLOR: TRANSLUCENT

ZONE	REV.	DESCRIPTION	BY	APPR'D	DATE
	1	INITIAL RELEASE	D.M.F.	B.M.B.	5/14/2008

REVISIONS

UNLESS OTHERWISE SPECIFIED:
DIMENSIONS ARE IN: INCHES[mm]
TOLERANCES: ANGULAR: ±2°
TWO PLACE DECIMAL: ±.03
THREE PLACE DECIMAL: ±.015

PROPRIETARY AND CONFIDENTIAL
THE INFORMATION CONTAINED IN THIS DRAWING IS THE SOLE PROPERTY OF POLYCASE. ANY REPRODUCTION IN PART OR AS A WHOLE WITHOUT THE WRITTEN PERMISSION OF POLYCASE IS PROHIBITED.

CAD FILE: Gasket-45

DWG. NO.
GASKET-45*08

PRODUCT
-

CLIENT
-

	NAME	DATE
DRAWN	D.M.F.	12/20/2007
CHECKED	B.M.B.	12/20/2007

POLYCASE™
YOUR PERFECT FIT
1305 CHESTER IND. PARKWAY AVON, OHIO 44011-1083 U.S.A.
PH#: 1-800-248-1233, 440-934-0444 FAX#: 440-934-0088

SIZE C

TITLE:
PRODUCT DETAIL DRAWING

REV 1

SCALE: 1:1

SHEET 1 OF 1

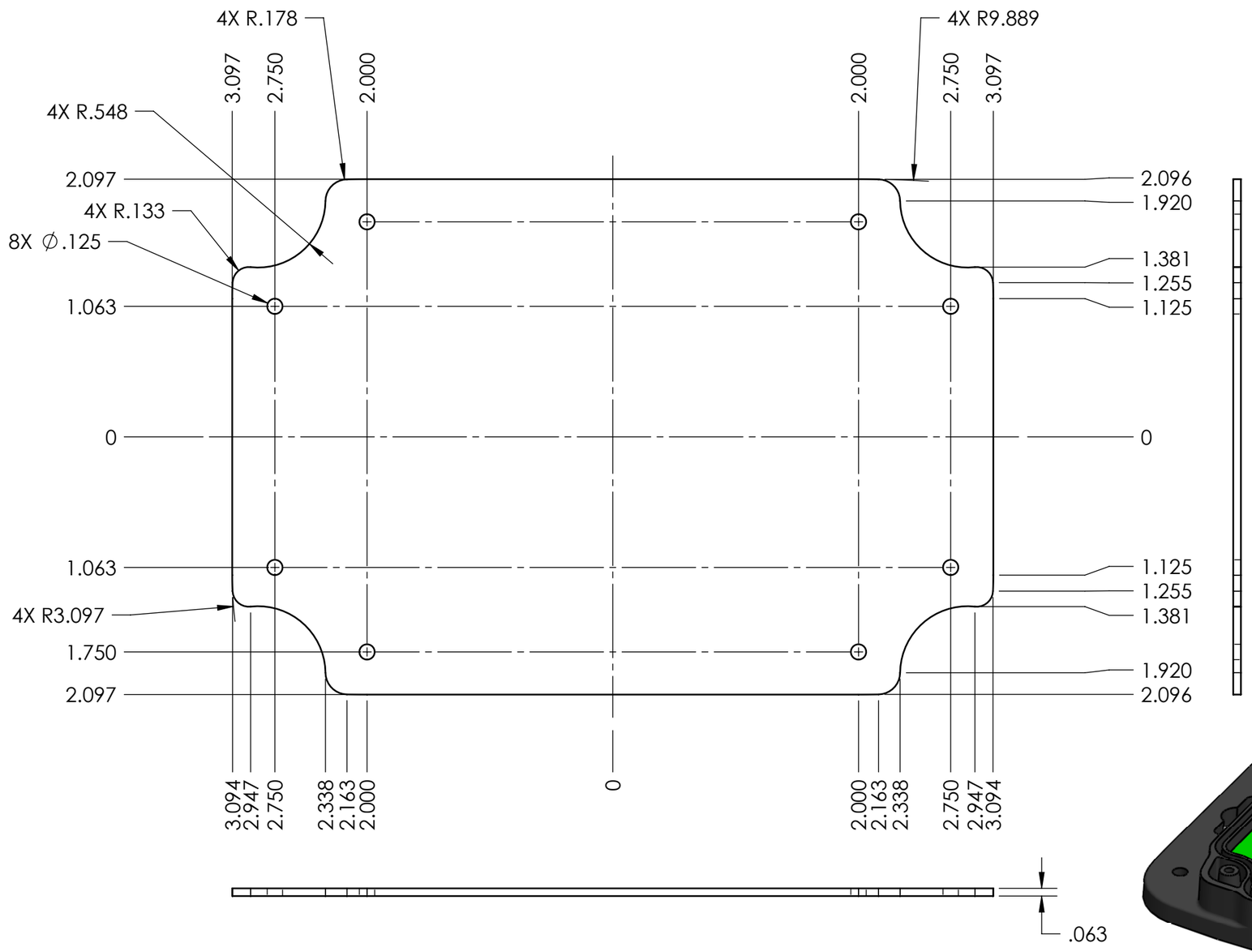

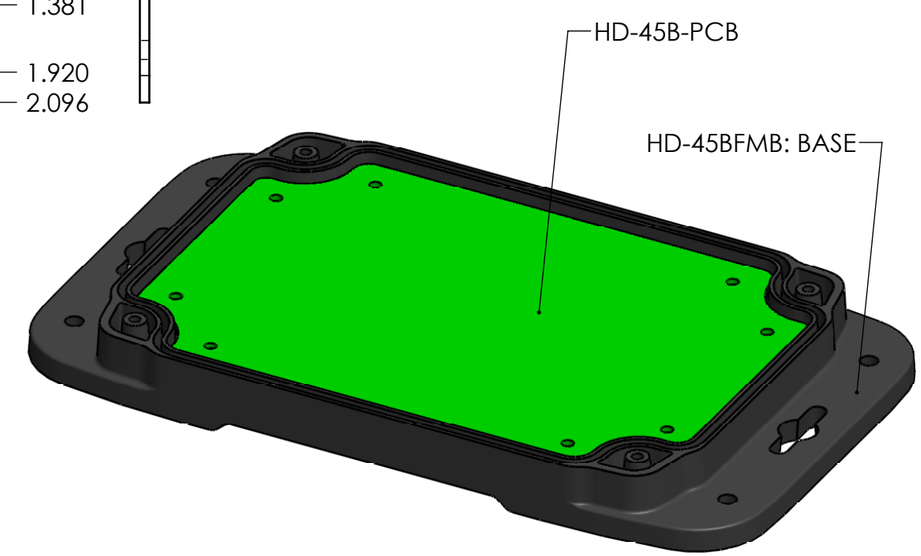

NOTES:
1. PCB SIZES INCLUDE .03 CLEARANCE FROM INNER WALLS AND SCREW TOWERS WHEN UTILIZING THE MOUNTINGBOSSES FOUND ON THE HD-45 BASE.
2. PCB BOSSES WILL ACCEPT A #4 X .250 LONG THREAD FORMING SCREW (SCREWS AVAILABLE FROM POLYCASE)

ZONE	REV.	DESCRIPTION	BY	APPR'D	DATE
	1	INITAIL RELEASE	D.M.F.	B.M.B.	5/14/2008

REVISIONS

UNLESS OTHERWISE SPECIFIED:
DIMENSIONS ARE IN: INCHES[mm]
TOLERANCES: ANGULAR: ±2°
TWO PLACE DECIMAL: ±.010
THREE PLACE DECIMAL: ±.005

PROPRIETARY AND CONFIDENTIAL
THE INFORMATION CONTAINED IN THIS DRAWING IS THE SOLE PROPERTY OF POLYCASE. ANY REPRODUCTION IN PART OR AS A WHOLE WITHOUT THE WRITTEN PERMISSION OF POLYCASE IS PROHIBITED.

CAD FILE: HD-45B-PCB

DWG. NO.
HD-45B-PCB

PRODUCT
-

CLIENT
-

	NAME	DATE
DRAWN	D.M.F.	5/14/2008
CHECKED	B.M.B.	5/14/2008

POLYCASE™
YOUR PERFECT FIT
1305 CHESTER IND. PARKWAY AVON, OHIO 44011-1083 U.S.A.
PH#: 1-800-248-1233, 440-934-0444 FAX#: 440-934-0088

SIZE B

TITLE: PRODUCT DETAIL DRAWING

REV 1

SCALE: 1:1

SHEET 1 OF 1

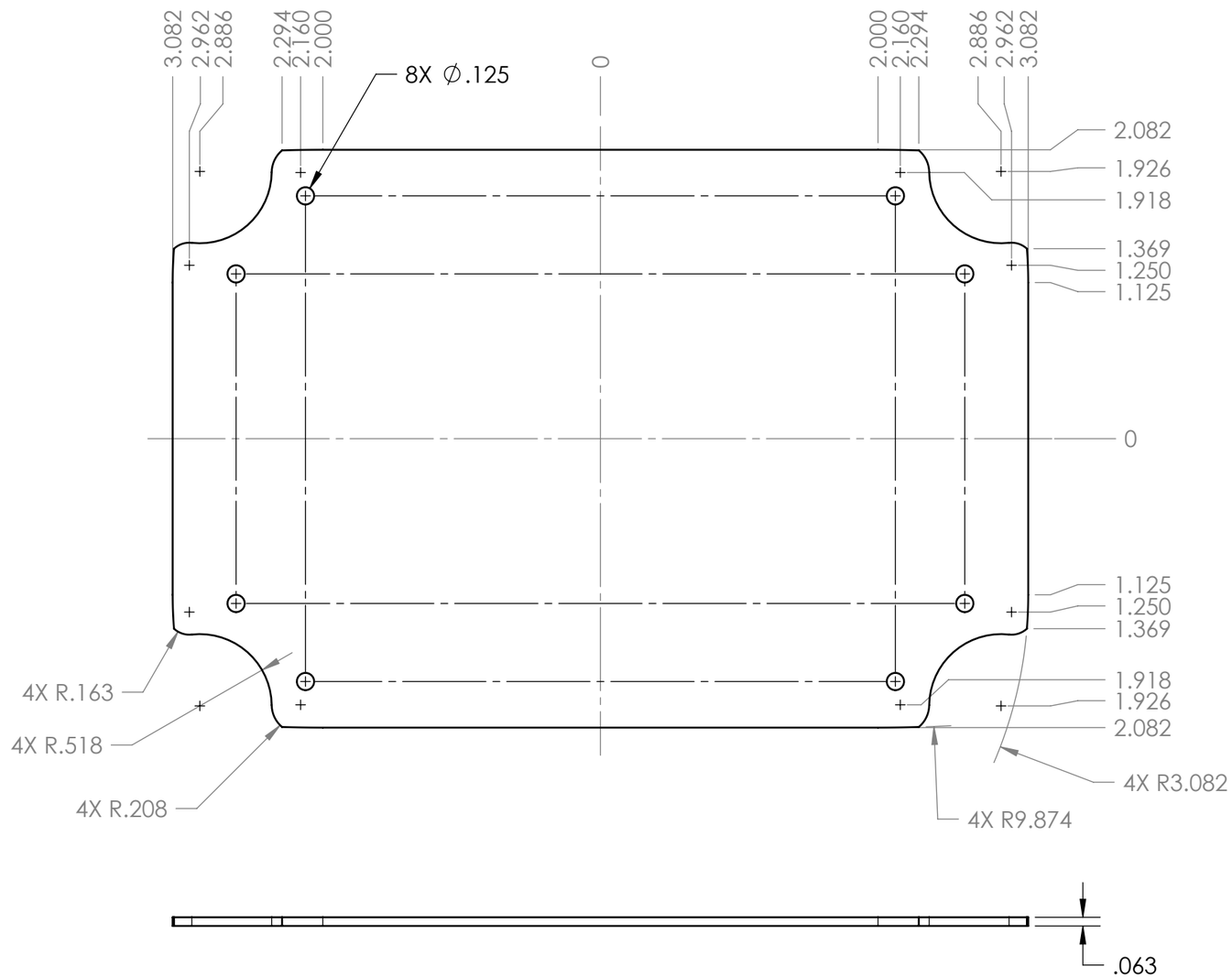

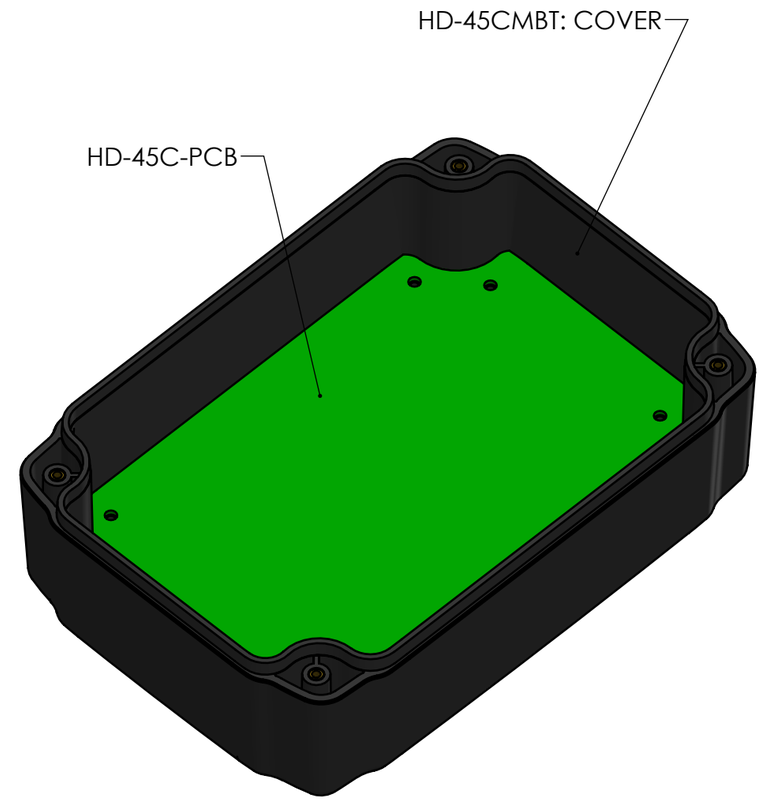

NOTES:
1. PCB SIZES INCLUDE .03 CLEARANCE FROM INNER WALLS AND SCREW TOWERS WHEN UTILIZING THE MOUNTINGBOSSES FOUND ON THE HD-45 COVER
2. PCB BOSSES WILL ACCEPT A #4 X .250 LONG THREAD FORMING SCREW (SCREWS AVAILABLE FROM POLYCASE)

REV.	DESCRIPTION	ZONE	BY	APPR'D	DATE
-	INITIAL RELEASE		D.M.F.	B.M.B.	5/14/2008

REVISIONS

UNLESS OTHERWISE SPECIFIED:
DIMENSIONS ARE IN: INCHES[mm]
TOLERANCES: ANGULAR: ±2°
TWO PLACE DECIMAL: ±.010
THREE PLACE DECIMAL: ±.005

PROPRIETARY AND CONFIDENTIAL
THE INFORMATION CONTAINED IN THIS DRAWING IS THE SOLE PROPERTY OF POLYCASE. ANY REPRODUCTION IN PART OR AS A WHOLE WITHOUT THE WRITTEN PERMISSION OF POLYCASE IS PROHIBITED.

CAD FILE: HD-45C-PCB

DWG. NO.
HD-45C-PCB

PRODUCT
-

CLIENT
-

	NAME	DATE
DRAWN	D.M.F.	5/14/2008
CHECKED	B.M.B.	5/14/2008

POLYCASE™
YOUR PERFECT FIT
1305 CHESTER IND. PARKWAY AVON, OHIO 44011-1083 U.S.A.
PH#: 1-800-248-1233, 440-934-0444 FAX#: 440-934-0088

SIZE B

TITLE:
PRODUCT DETAIL DRAWING

REV -

SCALE: 1:1

SHEET 1 OF 1