MICRO SWITCH
A DIVISION OF MINNEAPOLIS-HONEYWELL REGULATOR COMPANY
FREEPORT, ILLINOIS
FED. MFR. CODE 91929

SWITCH - ENCLOSED

CATALOG LISTING
2LN1-3-RH

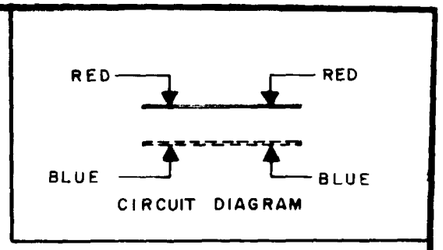

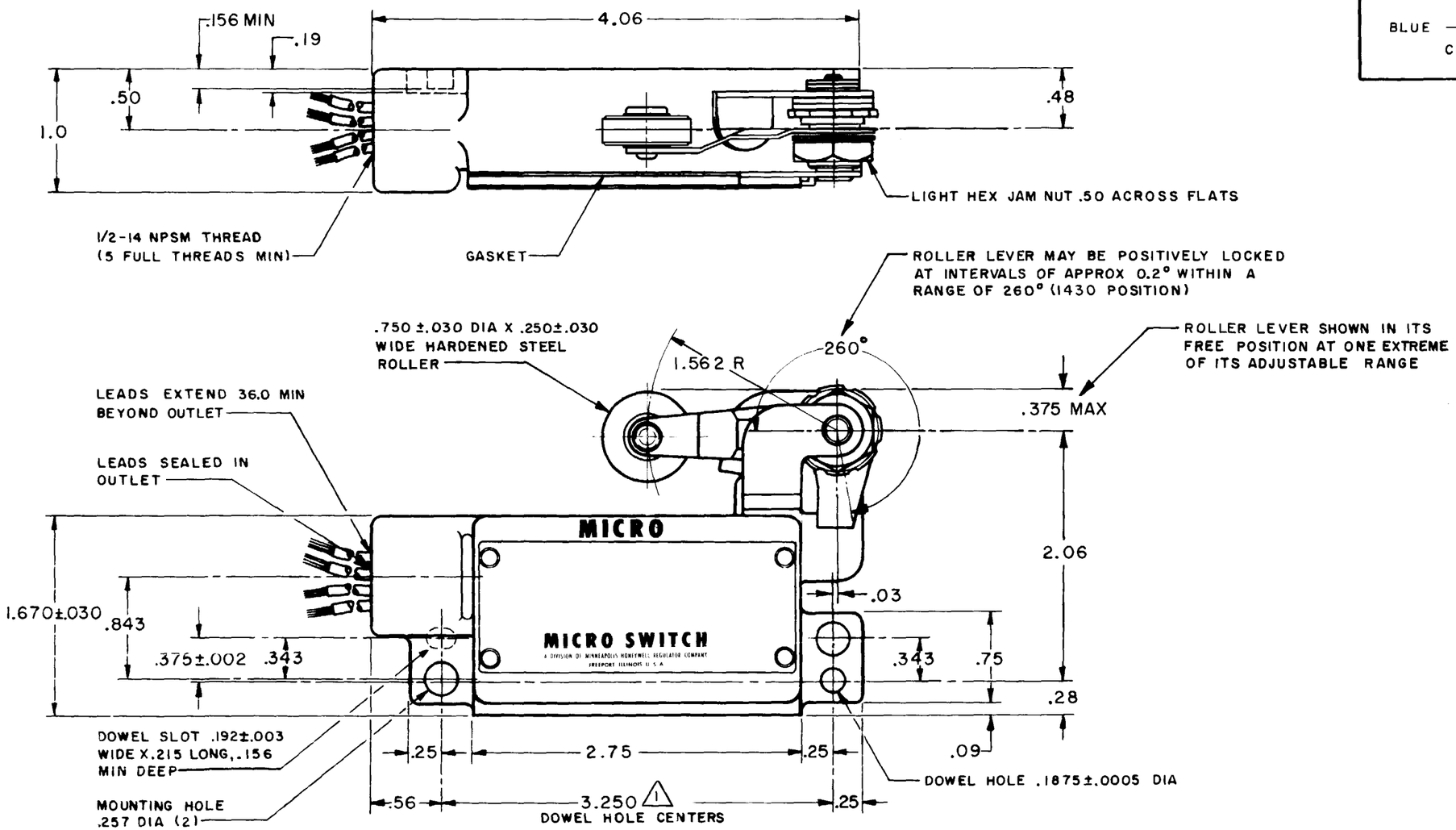

NOTE
1 - DOWEL HOLES WILL ACCEPT .187 MAX DIA DOWEL PINS ON 3.250 X .375±.002 CENTERS

THIS DRAWING COVERS A PROPRIETARY ITEM AND IS THE PROPERTY OF MICRO SWITCH, A DIVISION OF MINNEAPOLIS-HONEYWELL REGULATOR CO. THIS DRAWING IS NOT TO BE COPIED OR USED WITHOUT THE APPROVAL OF MICRO SWITCH.

CHARACTERISTICS	
OPERATING FORCE	3 LB MAX
DIFFERENTIAL FORCE	1/4 LB MIN
RELEASE FORCE	1/2 LB MIN
PRETRAVEL	.125 MAX
DIFFERENTIAL TRAVEL	.078 MAX
OVERTRAVEL	.344 MIN

ELECTRICAL DATA	
CONTACT ARRANGEMENT (SEE CIRCUIT DIAGRAM)	
-L25-	10 A-125 OR 250 VAC 1/2 HP-125 VAC

SCALE FULL
DO NOT SCALE PRINT

UNLESS OTHERWISE SPECIFIED
DIMENSIONS ARE IN INCHES
TOLERANCES ARE:

ONE PLACE	(.0)	±.030
TWO PLACE	(.00)	±.015
THREE PLACE	(.000)	±.005
ANGLES		±

WEIGHT

(M)2LN1-3RH
ISSUE 2
REPLACES
2LN1-3-RH
RELEASE NO.
M
DRAWING NUMBER
ISSUE
CHECK

REVISIONS

A	C016227	LMH 5 SEP 61
B	C018546	MBF 14 NOV 63
C	C021551	WEG 10 JUNE 66
D	C055988	MAM 31 OCT 84
E	C081513B	JAK 13 MAR 97

FORMTEK
DRAWN LMH 5 SEP 61