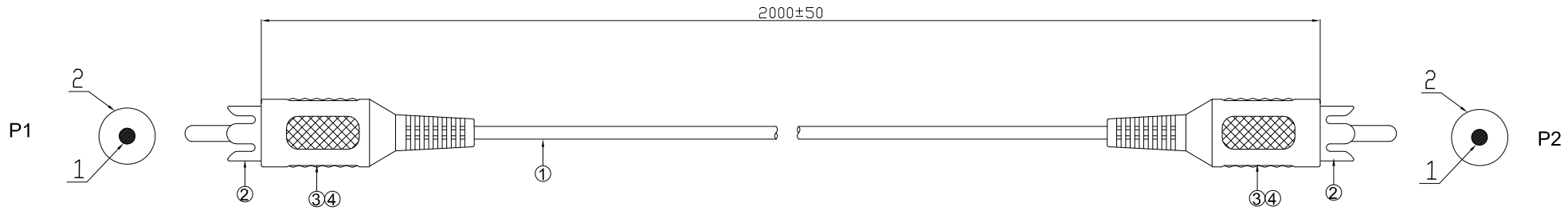

PIN ASSIGNMENT

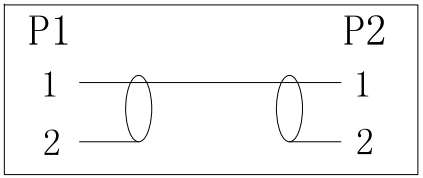

TEST CONDITION:
1.1OO% OPEN & SHORT TESTING
2.VOLTAGE:300V DC
3.INSULATION RESISTANCE :5M ohm Min.
4.CONDUCT RESISTANCE:2 ohm Max.

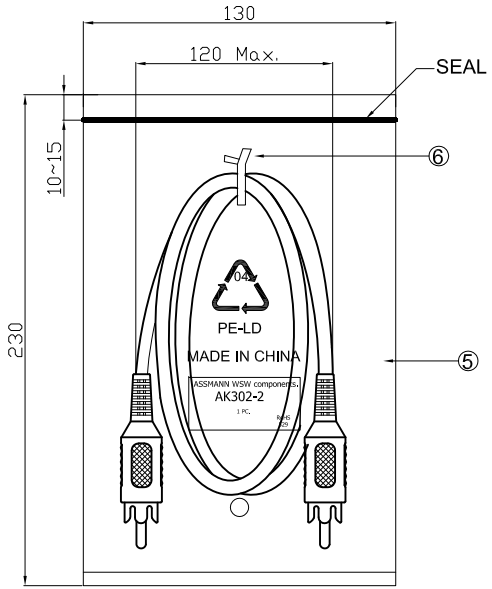

1PC/PE BAG

No.	NAME	DESCRIPTION	Q'TY	UNIT
⑥	TIE	Black L=80mm	1	PCS
⑤	PE BAG	Size: 130*230*0.05mm print black"MADE IN CHINA""+"1PC"	1	PCS
④	TUBE	Heat shrink tube black, OD1.5*10mm	2	PCS
③	IN JACKET	Clear LD-PE	1.6	g
	OUT JACKET	PVC-40P color:black	6.6	g
②	CONNECT	RCA plug male,Ni-plated, insulator color:brown	2	PCS
①	CABLE	T.C (10/0.12+28/0.12)*1C+Sprial OD3.0mm Jacket PVC color black	2000	mm

RoHS compliant
Unit: mm

Scale	Free
TOLERANCE	
DIM	TOL
Angle	TOL

Id.	Modification	Date	Name
⓪	Drawn	17.07.2017	Fred

	Date	Name
Drawn	17.07.2017	Fred
Approved	17.07.2017	Fred

ASSMANN WSW components

Customer-No.

ASSMANN WSW-No. AK302-2

Drawing-No. ASS 8026 CA

rev00

Replace

Sheet