Cinch

Catalog No. C-865

CIN::APSE®

High Speed Interconnect Technology

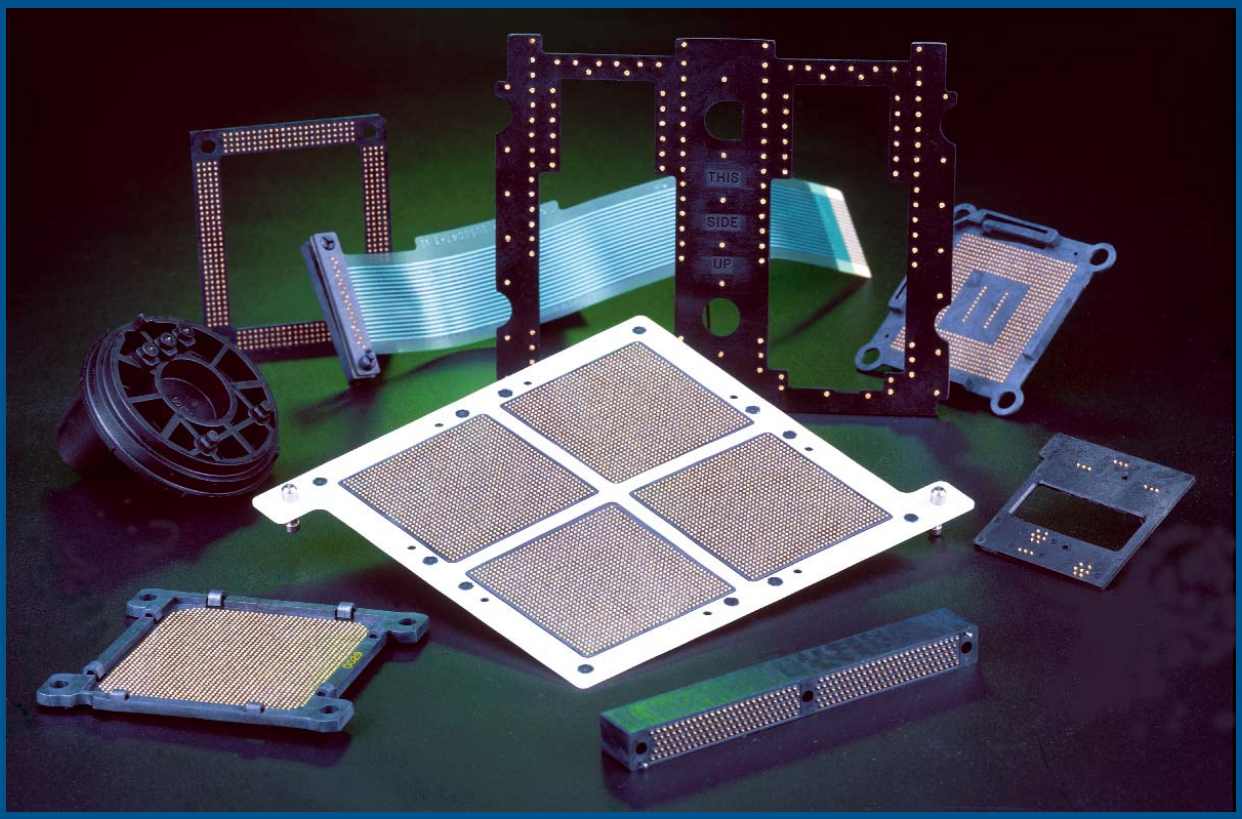

Cinch

CIN::APSE®

High-Speed Interconnect Technology

Cinch

Features

- *High signal speed capability enabling frequencies greater than 20 GHz.*
- *Z-Axis, solderless, compression mount interconnect system.*
- *Applications include production Land Grid Array (LGA) integrated circuit sockets, flex circuit to PCB, and parallel PCB to PCB interconnections.*
- *Provides solutions to many of the problems associated with through hole and surface mount soldered technology.*
- *Enables upgrade and system maintenance strategies.*
- *Available in custom I/O configurations and I/O counts from 1 to over 5,000.*
- *Offers low profile capabilities with compressed signal path length as short as 0.8 mm.*
- *Contact centerline spacing of 1mm or greater.*
- *Excellent reliability in commercial, military, and aerospace applications.*
- *Application can result in lower installed and system maintenance costs.*

Materials

Contact Material: Molybdenum

CIN::APSE Contact Plating: Gold

Plunger Material: Copper alloy

Plunger Plating: Gold

Insulator Material: Liquid crystal polymer

Packaging Tray Material: Anti-static ABS

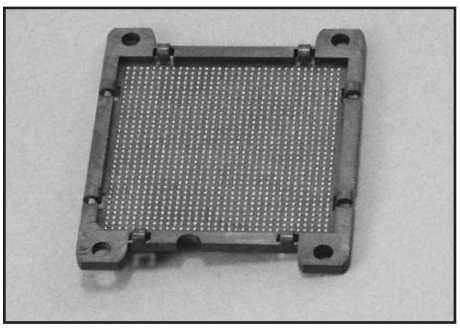

IC Component to Board Socket (LGA)

Environmental

Button-Only Configuration with 0.020" (0.5 mm) Diameter

Temperature Life Testing: 1000 Hours @ 200°C

Thermal Shock: 2,000 Cycles @ 20°C to 110°C

Humidity: 5,000 Hours @ 30°C to 80°C, 80% RH

Salt Spray: 96 Hours

Low Temperature: Operates in liquid nitrogen (77°K)

Bellcore TR-NWT-001217: Passed with plungers

Electrical

Button-Only Configuration with 0.020" (0.5 mm) Diameter

DC Resistance:	15mΩ average
Inductance:	Less than 1 nH
Current-Carrying Capability:	Up to 3 Amps.
Insulation Resistance:	25,000 MegΩ @ 500 VDC
Dielectric Withstanding Voltage:	900 VAC at sea level

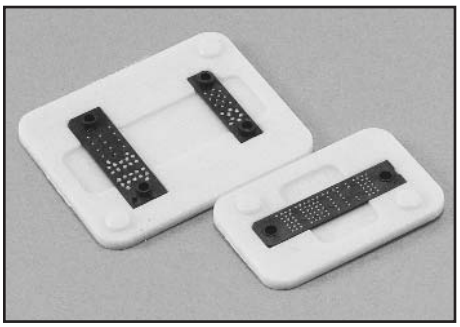

Flex Circuit to PCB

Mechanical

Button-Only Configuration with 0.020" (0.5 mm) diameter

Durability: 25,000 Z-axis actuations (CIN::APSE contact only)

Shock: 100 Gs; 6 milliseconds, no discontinuity greater than 2 nanoseconds

Vibration: 20 Gs; 10-20,000 Hz; no discontinuity greater than 2 nanoseconds

CIN::APSE®

High-Speed Interconnect Technology

Cinch

THE BUTTON CONTACT

The unique construction of the CIN::APSE contact provides superior mechanical and electrical performance. It is constructed of randomly wound molybdenum wire that is formed into a cyclindrical shape. Standard CIN::APSE contact diameters are 0.020" and 0.040".

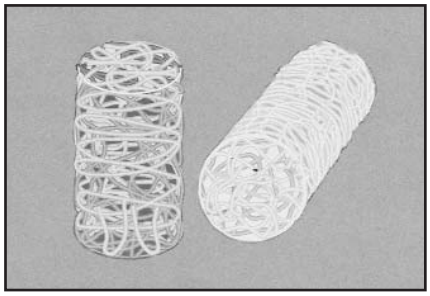

Mechanical

- Small form factor (0.020" diameter by 0.32" min. high)
- Low compression force (approx. 2.5 oz. min. per contact)
- Multiple beam structures
- Several points of contact per button
- Extremely lightweight
- Natural wiping action

Electrical

- Short signal path
- Very low inductance and resistance
- Signal integrity tested in the GHz range

Typical CIN::APSE Applications

- LGA package I/O to PC board (IC packages, multi-chip modules)
- PC board to PC board (parallel processors, enhancement/mezzanine cards)
- Flex circuit to PC board (rigid flex, harnessing)
- Flex circuit to ceramic (chip to harness)

CIN::APSE APPLIED

The basic button contact configuration consists of a single button installed in our patented “hourglass” design.

The hourglass cavity retains the CIN::APSE contact securely. Typically 0.003" protrudes from the top and the bottom of the insulator.

Step 1:
Using alignment features, position the CIN::APSE connector between a LGA chip package and PCB or two PCBs that have matching footprints.

Step 2:
Add Z-Axis compression and secure.

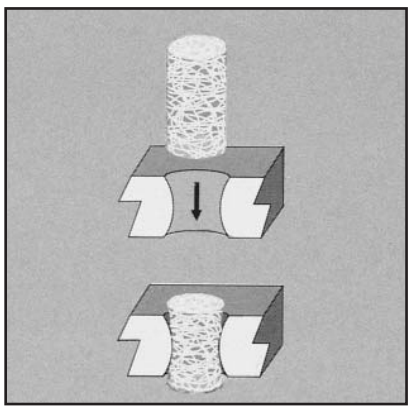

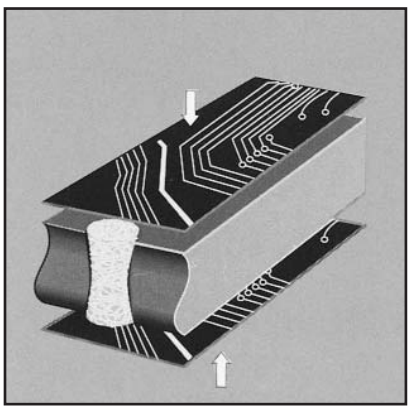

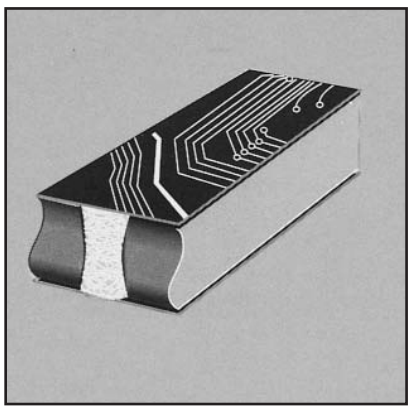

Call Toll Free: 1 (800) 323-9612

1

TYPICAL CONFIGURATION

1. Button-Only

This is the basic CIN::APSE contact configuration. It is ideally suited for z-axis applications requiring minimum height, high density, and signal integrity. This configuration is used in LGA and IC sockets, PCB to PCB, and flex print circuit to PCB applications.

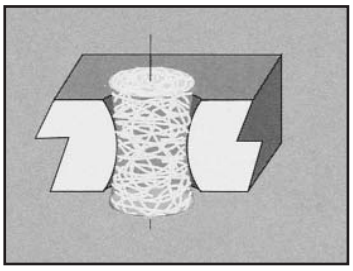

2. Plunger-Button

The addition of a gold-plated brass plunger increases the durability of the CIN::APSE contact system while also achieving additional height. This configuration suits itself especially well for PCB to PCB interconnect and those that require excessive handling.

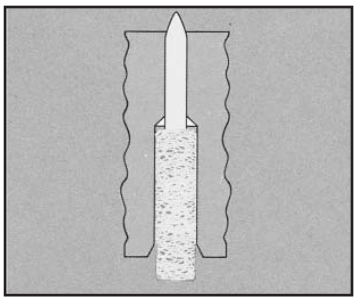

Other custom configurations are available. Contact Cinch for details.

CIN::APSE Applications

Due to its breakthrough nature, it is impossible to illustrate all of the applications CIN::APSE technology can address. The following applications illustrate only a portion of the types of interconnect problems that CIN::APSE can solve.

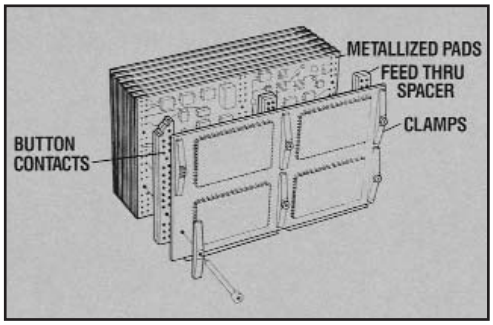

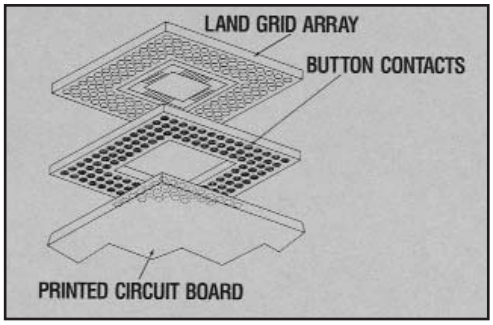

VARIOUS CIN::APSE APPLICATIONS

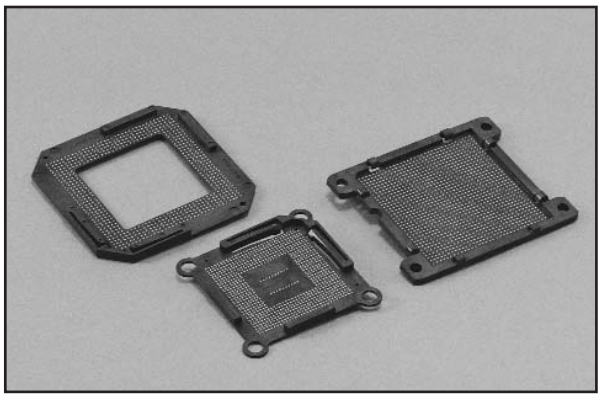

IC Component to Board Socket (LGA)

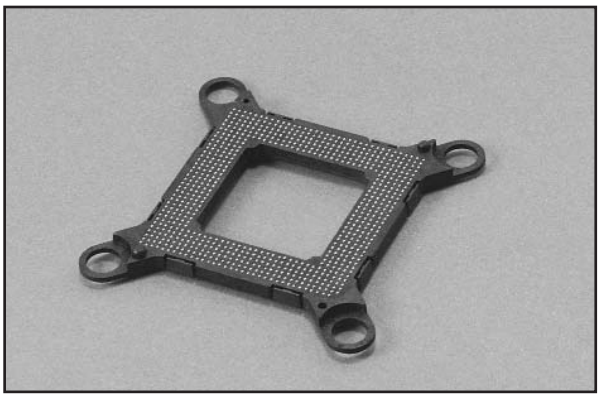

PCB to PCB

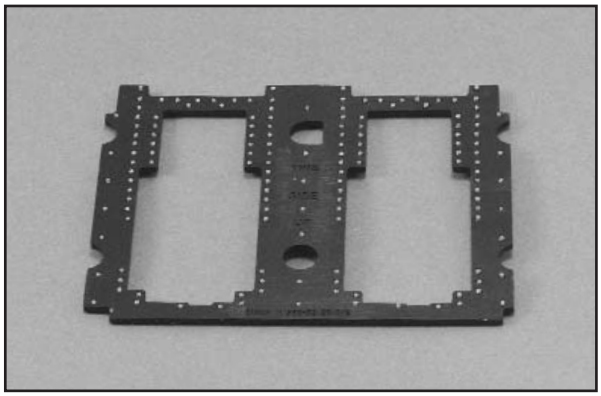

Hybrid Circuit to Flex to PCB

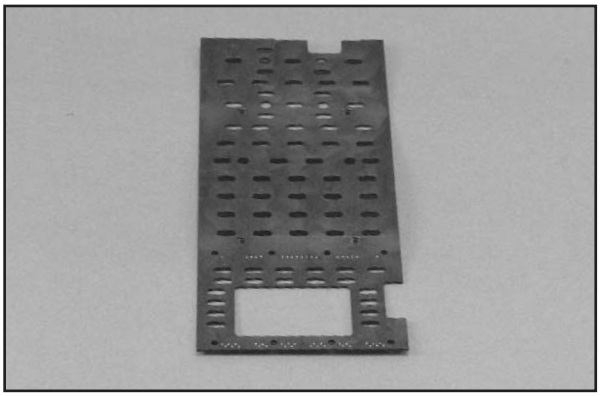

LCD to Flex to PCB

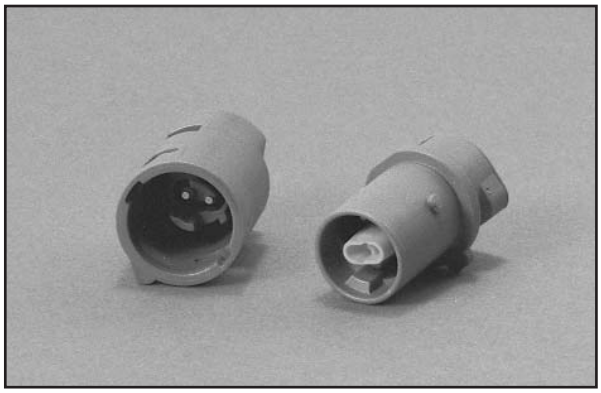

Cable to PCB/Flex

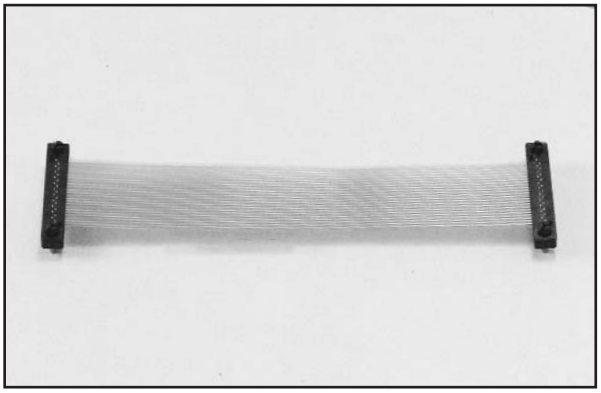

Flex Circuit to PCB

COMMERCIAL

Barrier Blocks
Circular Mini DIN
BNC
Jones Plugs
Edge Connectors

Cinch

Cinch Commercial Products, consisting of Jones Plugs and Sockets, Barrier Blocks, Edge Cards, Two-Piece Commercial Dins, Mini Din Plugs, and their newest addition the 75Ω Press-Fit BNC Receptacle, provide a wide variety of connectors for the purchaser and designer to chose from.

The Jones Plugs and Sockets have been utilized for decades and provide a quick, reliable, and economical means of solving your higher current-carrying capacity needs. Available in two series (300 and 2,400), these connectors can be found in data processing controls; amusement and vending machines; medical, communication, and test equipment; as well as industrial controls and heavy-duty, battery-powered equipment. Both series are available in a variety of cable and panel mounting options.

Cinch Barrier Blocks are designed to simplify wiring work by reducing splicing, preventing current leaks and short circuits, and increasing insulation. Available in a variety of densities, these barrier blocks can be found in applications ranging from industrial controls to switching systems.

Designed specially for applications where space is at a premium, the Cinch Mini Din family is ideal for personal computers, keyboard-mouse interface, hand-held electronic equipment, office-automation equipment, and audio and video equipment. Available in sizes 3 through 8 contact, the Cinch Mini Din family includes a fully shielded cable mounted plug in various cable lengths or cable mounted plug components for customers with high-volume assembly and overmold capabilities.

Cinch Edge Card Connectors are available in a variety of styles on both .100 or .156 center spacing.

The newest addition to the commercial family, the 75Ω Press-Fit BNC Receptacle is designed around a unique patented press-fit design that allows for multiple insertion into a backplane without loss of mechanical retention or electrical performance.

When looking for time reliability to solve your commercial interconnect needs, look no further than Cinch Connectors. Whether it's a Jones Plug and Socket, Barrier Block, Edge Card, Mini Din plug, or our newest addition, the 75Ω BNC Press-Fit connector, you will always know years of customer satisfaction stand behind the product you chose.

Cinch

Features

- ***Interposing barriers between terminals yield higher electrical ratings and provide additional protection against frayed wire shorting.***
- ***A wide variety of barrier blocks makes it possible to select the combination of mechanical and electrical characteristics that best meet the exact requirements of your application.***
- ***A wide selection of optional terminals and fanning strips permits the equipment designer to choose the method of termination most suitable for his environmental specifications and manufacturing requirements.***

Materials

Insulation Material: Molded monoblock, general purpose phenolic, black, UL Rated 94V-1

Eyelets: Material - Brass
Plating - Nickel

Screws: Material - Steel
Plating - Nickel over copper flash

Solder Terminals: Material - Brass
Plating - Electro-Tin

Marker Strip Material: Nema Grade XPC, UL Rated 94V-O

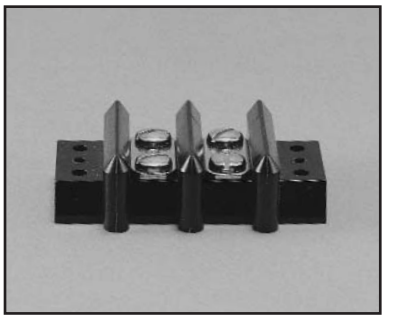

Environmental

Operating Temperature: -55° to +300°F

Certifications: UL Recognized - File E61245
CSA - LR 31996

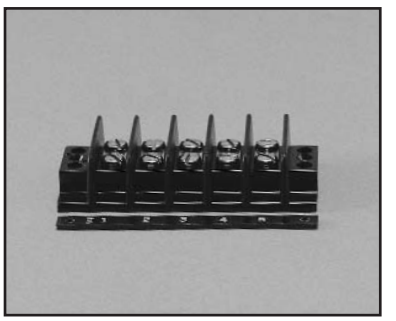

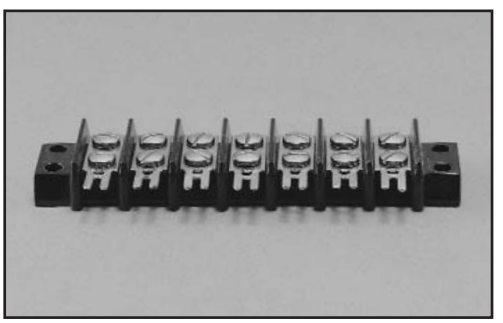

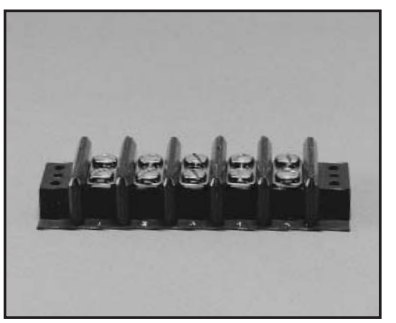

Marketed exclusively through distribution.

TERMINAL BLOCK QUICK REFERENCE

Series	Center-to-Center Spacing	Number of Terminals	Single or Double Row	Screw Size	Operating Voltage	Current Rating	Max. Wire Size	Max. Watts/ Terminal	Voltage Rating w/Marker	Voltage Rating w/o Marker	Marker Strip Mounting
140	.375	1-25	Double	5-40	250 Volts	15 Amps	#16	3750	2000	1100	Bottom
141	.438	1-20	Double	6-32	250 Volts	20 Amps	#14	5000	2400	1100	Bottom
142	.563	1-17	Double	8-32	250 Volts	30 Amps	#10	7500	2600	1600	Bottom
150	.688	1-10	Double	10-32	250 Volts	40 Amps	#10	10,000	2400	1500	Bottom
151	.875	1-8	Double	12-32	250 Volts	50 Amps	#8	12,500	3400	1800	Bottom
152	1.125	1-6	Double	1/4-28	250 Volts	70 Amps	#6	54,000	3800	2100	Bottom
164	.375	1-21	Double	6-32	250 Volts	15 Amps	#14	3750	2000	1100	Bottom
540	.375	2-31	Double	5-40	600 Volts	15 Amps	#16	3750	2300	2300	Top
541	.438	2-30	Double	6-32	600 Volts	20 Amps	#14	5000	2800	2800	Top
542	.563	2-26	Double	8-32	600 Volts	30 Amps	#10	7500	4000	4000	Top
176	.375	2-10	Single	5-40	250 Volts	15 Amps	#16	3750	N/A	1100	N/A

Marketed exclusively through distribution.

.375 Density, 5-40 x 3/16" BH Screw, Open Bottom, Double Row

Cinch

Electrical Characteristics

Voltage Rating: 250 VAC RMS maximum
Current Rating: 15 Amps maximum
Maximum Watts Per Terminal: 3750

Mechanical Characteristics

Maximum Wire Size: #16 AWG
Recommended Tightening Torque: 9 lb.-in.

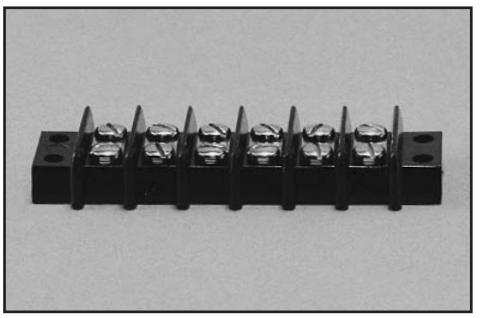

Dimensions

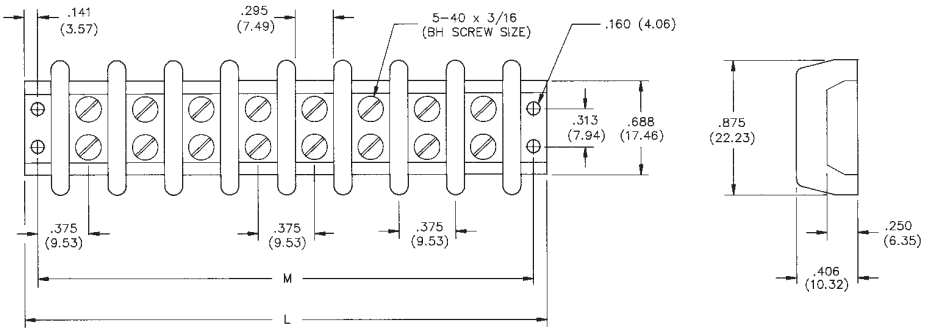

Ordering Information

No. of Terminals	Standard Screw Catalog No.	"M" Dim.	"L" Dim.
1	1-140	.750	1.032
2	2-140	1.125	1.407
3	3-140	1.500	1.782
4	4-140	1.875	2.157
5	5-140	2.250	2.532
6	6-140	2.625	2.907
7	7-140	3.000	3.282
8	8-140	3.375	3.657
9	9-140	3.750	4.032
10	10-140	4.125	4.407
11	11-140	4.500	4.782
12	12-140	4.875	5.157
13	13-140	5.250	5.532
14	14-140	5.625	5.907
15	15-140	6.000	6.282
16	16-140	6.375	6.657
17	17-140	6.750	7.032
18	18-140	7.125	7.407
19	19-140	7.500	7.782
20	20-140	7.875	8.157
21	21-140	8.250	8.532
22	22-140	8.625	8.907
23	23-140	9.000	9.282
24	24-140	9.375	9.657
25	25-140	9.750	10.032

Solder Terminal Options

Dimensions

"Y" Terminals

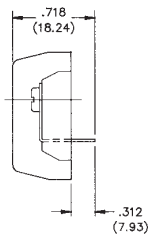

"3/4W" Terminals

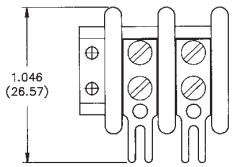

"W" Terminals

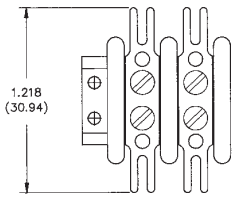

Ordering Information

No. of Terminals	Catalog No.	Catalog No.	Catalog No.
1	1-140-Y	1-140-3/4W	1-140-W
2	2-140-Y	2-140-3/4W	2-140-W
3	3-140-Y	3-140-3/4W	3-140-W
4	4-140-Y	4-140-3/4W	4-140-W
5	5-140-Y	5-140-3/4W	5-140-W
6	6-140-Y	6-140-3/4W	6-140-W
7	7-140-Y	7-140-3/4W	7-140-W
8	8-140-Y	8-140-3/4W	8-140-W
9	9-140-Y	9-140-3/4W	9-140-W
10	10-140-Y	10-140-3/4W	10-140-W
11	11-140-Y	11-140-3/4W	11-140-W
12	12-140-Y	12-140-3/4W	12-140-W
13	13-140-Y	13-140-3/4W	13-140-W
14	14-140-Y	14-140-3/4W	14-140-W
15	15-140-Y	15-140-3/4W	15-140-W
16	16-140-Y	16-140-3/4W	16-140-W
17	17-140-Y	17-140-3/4W	17-140-W
18	18-140-Y	18-140-3/4W	18-140-W
19	19-140-Y	19-140-3/4W	19-140-W
20	20-140-Y	20-140-3/4W	20-140-W
21	21-140-Y	21-140-3/4W	21-140-W
22	22-140-Y	22-140-3/4W	22-140-W
23	23-140-Y	23-140-3/4W	23-140-W
24	24-140-Y	24-140-3/4W	24-140-W
25	25-140-Y	25-140-3/4W	25-140-W

Solder Terminals can be ordered separately.

Terminal Type	Catalog No.
"Y"	Y-140
"3/4W"	3/4W-140
"W"	W-140

Marketed exclusively through distribution.

2

Marker Strips

Dimensions

Standard

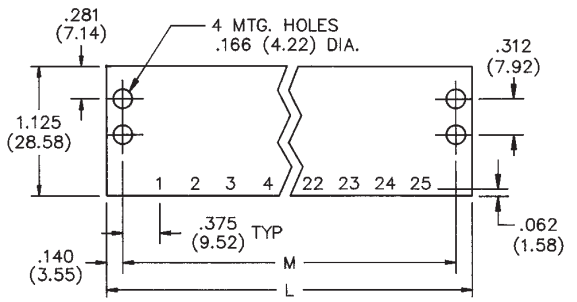

"Y" Terminal

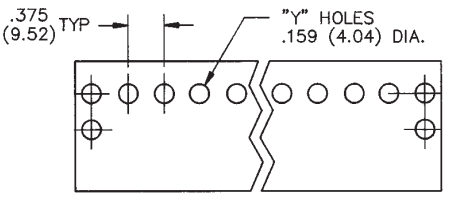

Ordering Information

No. of Terminals	Catalog No.	Catalog No.
1	MS-1-140	MS-1-140-Y
2	MS-2-140	MS-2-140-Y
3	MS-3-140	MS-3-140-Y
4	MS-4-140	MS-4-140-Y
5	MS-5-140	MS-5-140-Y
6	MS-6-140	MS-6-140-Y
7	MS-7-140	MS-7-140-Y
8	MS-8-140	MS-8-140-Y
9	MS-9-140	MS-9-140-Y
10	MS-10-140	MS-10-140-Y
11	MS-11-140	MS-11-140-Y
12	MS-12-140	MS-12-140-Y
13	MS-13-140	MS-13-140-Y
14	MS-14-140	MS-14-140-Y
15	MS-15-140	MS-15-140-Y
16	MS-16-140	MS-16-140-Y
17	MS-17-140	MS-17-140-Y
18	MS-18-140	MS-18-140-Y
19	MS-19-140	MS-19-140-Y
20	MS-20-140	MS-20-140-Y
21	MS-21-140	MS-21-140-Y
22	MS-22-140	MS-22-140-Y
23	MS-23-140	MS-23-140-Y
24	MS-24-140	MS-24-140-Y
25	MS-25-140	MS-25-140-Y

Use Standard Marker Strips for "3/4W" and "W" Solder Terminals.

Accessories

- Jumpers
- Fanning Strips

Marketed exclusively through distribution.

.438 Density, 6-32 x 1/4" BH Screw, Open Bottom, Double Row

Cinch

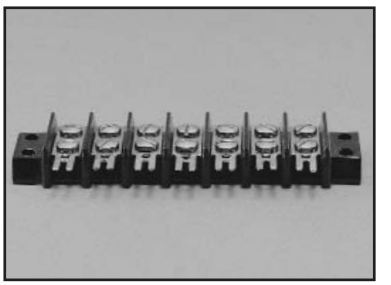

Electrical Characteristics

Voltage Rating: 250 VAC RMS maximum
Current Rating: 20 Amps maximum
Maximum Watts Per Terminal: 5000

Mechanical Characteristics

Maximum Wire Size: #14 AWG
Recommended Tightening Torque: 12 lb.-in.

Dimensions

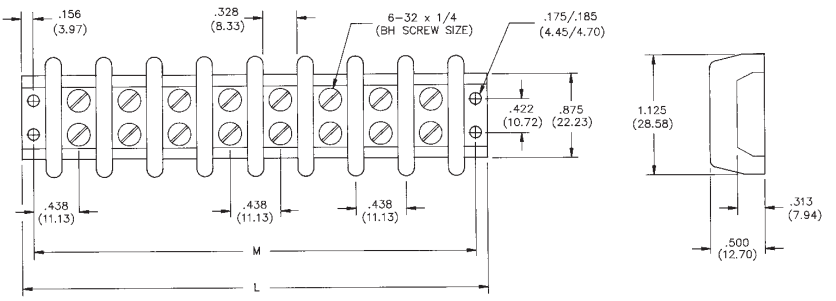

Ordering Information

No. of Terminals	Standard Screw Catalog No.	"M" Dim.	"L" Dim.
1	1-141	.875	1.187
2	2-141	1.312	1.625
3	3-141	1.750	2.062
4	4-141	2.187	2.500
5	5-141	2.625	2.938
6	6-141	3.062	3.375
7	7-141	3.500	3.812
8	8-141	3.938	4.250
9	9-141	4.375	4.687
10	10-141	4.813	5.125
11	11-141	5.250	5.562
12	12-141	5.687	6.000
13	13-141	6.125	6.437
14	14-141	6.562	6.875
15	15-141	7.000	7.312
16	16-141	7.437	7.750
17	17-141	7.875	8.187
18	18-141	8.312	8.625
19	19-141	8.750	9.062
20	20-141	9.187	9.500

Marketed exclusively through distribution.

Solder Terminal Options

Dimensions

"Y" Terminals

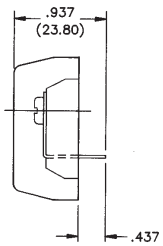

"3/4W" Terminals

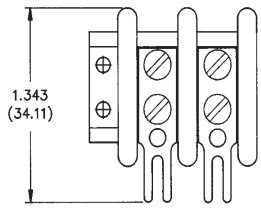

"W" Terminals

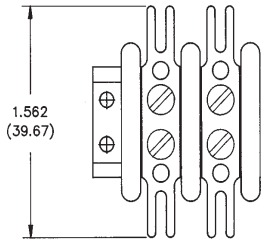

Ordering Information

No. of Terminals	Catalog No.	Catalog No.	Catalog No.
1	1-141-Y	1-141-3/4W	1-141-W
2	2-141-Y	2-141-3/4W	2-141-W
3	3-141-Y	3-141-3/4W	3-141-W
4	4-141-Y	4-141-3/4W	4-141-W
5	5-141-Y	5-141-3/4W	5-141-W
6	6-141-Y	6-141-3/4W	6-141-W
7	7-141-Y	7-141-3/4W	7-141-W
8	8-141-Y	8-141-3/4W	8-141-W
9	9-141-Y	9-141-3/4W	9-141-W
10	10-141-Y	10-141-3/4W	10-141-W
11	11-141-Y	11-141-3/4W	11-141-W
12	12-141-Y	12-141-3/4W	12-141-W
13	13-141-Y	13-141-3/4W	13-141-W
14	14-141-Y	14-141-3/4W	14-141-W
15	15-141-Y	15-141-3/4W	15-141-W
16	16-141-Y	16-141-3/4W	16-141-W
17	17-141-Y	17-141-3/4W	17-141-W
18	18-141-Y	18-141-3/4W	18-141-W
19	19-141-Y	19-141-3/4W	19-141-W
20	20-141-Y	20-141-3/4W	20-141-W

Solder Terminals can be ordered separately.

Terminal Type	Catalog No.
"Y"	Y-141
"3/4W"	3/4W-141
"W"	W-141

Marketed exclusively through distribution.

2

Marker Strips

Dimensions

Standard

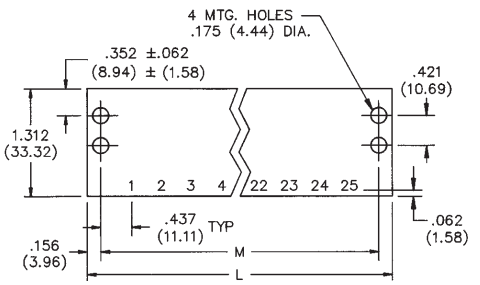

"Y" Terminal

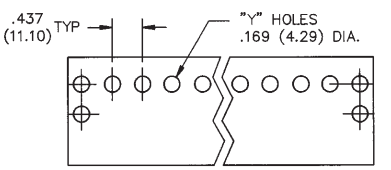

Ordering Information

No. of Terminals	Catalog No.	Catalog No.
1	MS-1-141	MS-1-141-Y
2	MS-2-141	MS-2-141-Y
3	MS-3-141	MS-3-141-Y
4	MS-4-141	MS-4-141-Y
5	MS-5-141	MS-5-141-Y
6	MS-6-141	MS-6-141-Y
7	MS-7-141	MS-7-141-Y
8	MS-8-141	MS-8-141-Y
9	MS-9-141	MS-9-141-Y
10	MS-10-141	MS-10-141-Y
11	MS-11-141	MS-11-141-Y
12	MS-12-141	MS-12-141-Y
13	MS-13-141	MS-13-141-Y
14	MS-14-141	MS-14-141-Y
15	MS-15-141	MS-15-141-Y
16	MS-16-141	MS-16-141-Y
17	MS-17-141	MS-17-141-Y
18	MS-18-141	MS-18-141-Y
19	MS-19-141	MS-19-141-Y
20	MS-20-141	MS-20-141-Y

Use Standard Marker Strip for "3/4W" and "W" Solder Terminals.

Accessories

- Jumpers
- Fanning Strips

Marketed exclusively through distribution.

.563 Density, 8-32 x 5/16" BH Screw, Open Bottom, Double Row

Cinch

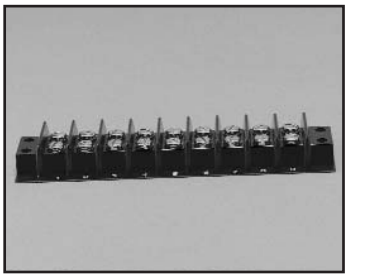

Electrical Characteristics

Voltage Rating: 250 VAC RMS maximum
Current Rating: 30 Amps maximum
Maximum Watts Per Terminal: 7500

Mechanical Characteristics

Maximum Wire Size: #10 AWG
Recommended Tightening Torque: 16 lb.-in.

Dimensions

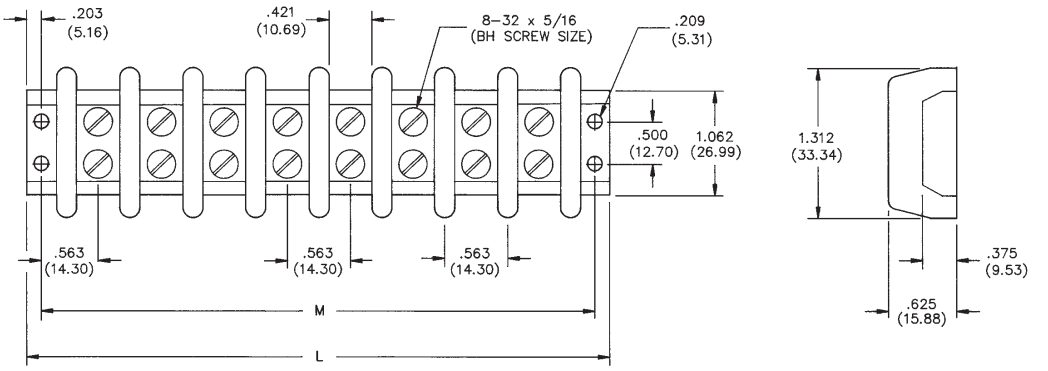

Ordering Information

No. of Terminals	Standard Screw Catalog No.	"M" Dim.	"L" Dim.
1	1-142	1.125	1.531
2	2-142	1.687	2.094
3	3-142	2.250	2.656
4	4-142	2.812	3.219
5	5-142	3.375	3.781
6	6-142	3.937	4.344
7	7-142	4.500	4.906
8	8-142	5.062	5.468
9	9-142	5.625	6.031
10	10-142	6.187	6.594
11	11-142	6.750	7.156
12	12-142	7.312	7.719
13	13-142	7.875	8.281
14	14-142	8.437	8.844
15	15-142	9.000	9.406
16	16-142	9.562	9.969
17	17-142	10.125	10.531

Marketed exclusively through distribution.

Solder Terminal Options

Dimensions

"Y" Terminals

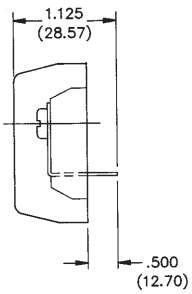

"3/4W" Terminals

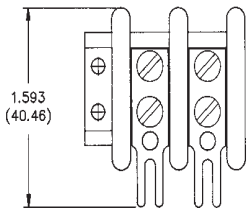

"W" Terminals

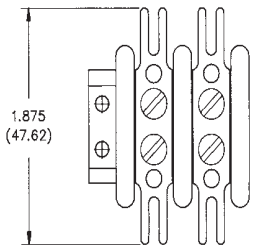

Ordering Information

No. of Terminals	Catalog No.	Catalog No.	Catalog No.
1	1-142-Y	1-142-3/4W	1-142-W
2	2-142-Y	2-142-3/4W	2-142-W
3	3-142-Y	3-142-3/4W	3-142-W
4	4-142-Y	4-142-3/4W	4-142-W
5	5-142-Y	5-142-3/4W	5-142-W
6	6-142-Y	6-142-3/4W	6-142-W
7	7-142-Y	7-142-3/4W	7-142-W
8	8-142-Y	8-142-3/4W	8-142-W
9	9-142-Y	9-142-3/4W	9-142-W
10	10-142-Y	10-142-3/4W	10-142-W
11	11-142-Y	11-142-3/4W	11-142-W
12	12-142-Y	12-142-3/4W	12-142-W
13	13-142-Y	13-142-3/4W	13-142-W
14	14-142-Y	14-142-3/4W	14-142-W
15	15-142-Y	15-142-3/4W	15-142-W
16	16-142-Y	16-142-3/4W	16-142-W
17	17-142-Y	17-142-3/4W	17-142-W

Solder Terminals can be ordered separately.

Terminal Type	Catalog No.
"Y"	Y-142
"3/4W"	3/4W-142
"W"	W-142

Marketed exclusively through distribution.

2

Marker Strips

Dimensions

Standard

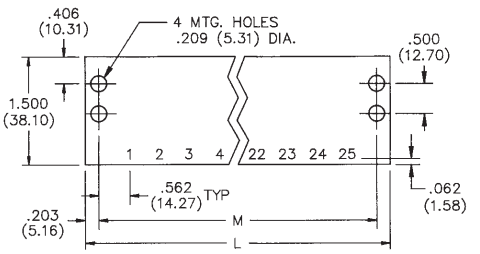

"Y" Terminal

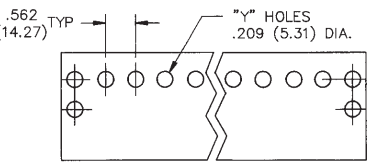

Ordering Information

No. of Terminals	Catalog No.	Catalog No.
1	MS-1-142	MS-1-142-Y
2	MS-2-142	MS-2-142-Y
3	MS-3-142	MS-3-142-Y
4	MS-4-142	MS-4-142-Y
5	MS-5-142	MS-5-142-Y
6	MS-6-142	MS-6-142-Y
7	MS-7-142	MS-7-142-Y
8	MS-8-142	MS-8-142-Y
9	MS-9-142	MS-9-142-Y
10	MS-10-142	MS-10-142-Y
11	MS-11-142	MS-11-142-Y
12	MS-12-142	MS-12-142-Y
13	MS-13-142	MS-13-142-Y
14	MS-14-142	MS-14-142-Y
15	MS-15-142	MS-15-142-Y
16	MS-16-142	MS-16-142-Y
17	MS-17-142	MS-17-142-Y

Use Standard Marker Strips for “3/4W” and “W” Solder Terminals.

Accessories

- Jumpers
- Fanning Strips

Marketed exclusively through distribution.

.688 Density, 10-32 x 5/16" BH Screw, Open Bottom, Double Row

Cinch

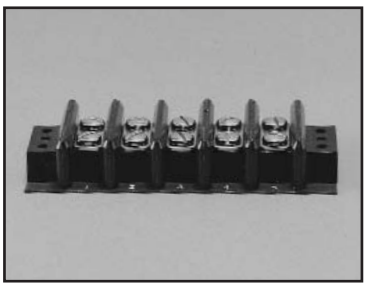

Electrical Characteristics

Voltage Rating: 250 VAC RMS maximum
Current Rating: 40 Amps maximum
Maximum Watts Per Terminal: 10,000

Mechanical Characteristics

Maximum Wire Size: #10 AWG
Recommended Tightening Torque: 20 lb.-in.

Dimensions

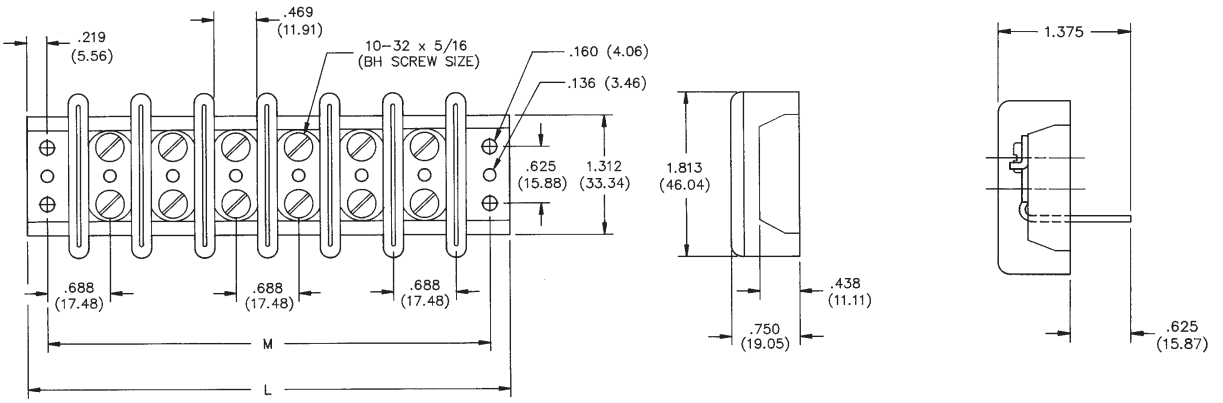

Ordering Information

No. of Terminals	Standard Screw Catalog No.	Y-Terminals Catalog No.	"M" Dim.	"L" Dim.
1	1-150	1-150-Y	1.375	1.812
2	2-150	2-150-Y	2.062	2.500
3	3-150	3-150-Y	2.750	3.187
4	4-150	4-150-Y	3.437	3.875
5	5-150	5-150-Y	4.125	4.562
6	6-150	6-150-Y	4.812	5.250
7	7-150	7-150-Y	5.500	5.938
8	8-150	8-150-Y	6.187	6.625
9	9-150	9-150-Y	6.875	7.312
10	10-150	10-150-Y	7.562	8.000

Marketed exclusively through distribution.

Marker Strips

Dimensions

Standard

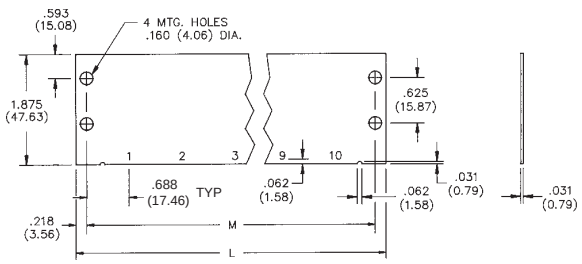

"Y" Terminal

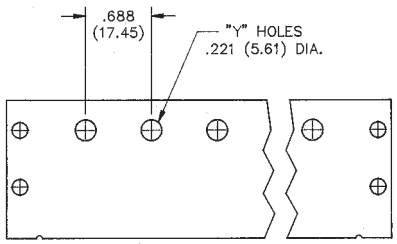

Ordering Information

No. of Terminals	Catalog No.	Catalog No.
1	MS-1-150	MS-1-150-Y
2	MS-2-150	MS-2-150-Y
3	MS-3-150	MS-3-150-Y
4	MS-4-150	MS-4-150-Y
5	MS-5-150	MS-5-150-Y
6	MS-6-150	MS-6-150-Y
7	MS-7-150	MS-7-150-Y
8	MS-8-150	MS-8-150-Y
9	MS-9-150	MS-9-150-Y
10	MS-10-150	MS-10-150-Y

Accessories

None Available for 150 Series.

Marketed exclusively through distribution.

.875 Density, 12-32 x 3/8" BH Screw, Open Bottom, Double Row

Cinch

Electrical Characteristics

Voltage Rating: 250 Volts maximum
Current Rating: 50 Amps maximum
Maximum Watts Per Terminal: 12,500

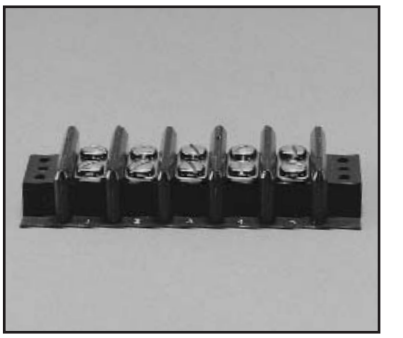

Mechanical Characteristics

Maximum Wire Size: #8
Recommended Tightening Torque: 40 lb.-in.

Dimensions

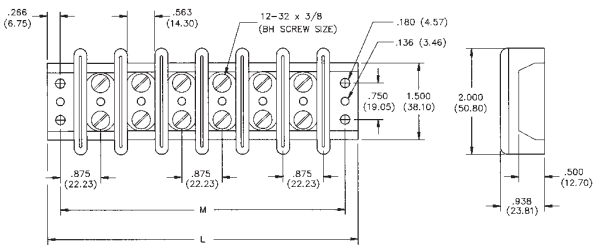

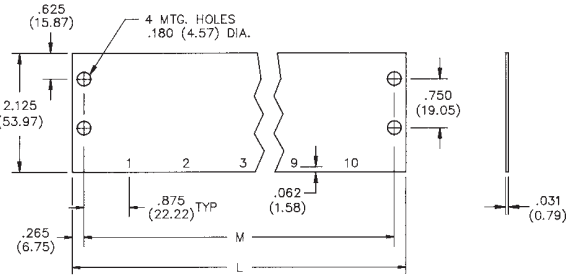

Ordering Information

No. of Terminals	Catalog No.	"M" Dim. (in)	"L" Dim. (in)	Marker Strip Catalog No.
1	1-151	1.750	2.282	N/A
2	2-151	2.625	3.157	MS-2-151
3	3-151	3.500	4.032	MS-3-151
4	4-151	4.375	4.907	MS-4-151
5	5-151	5.250	5.782	MS-5-151
6	6-151	6.125	6.657	MS-6-151
7	7-151	7.000	7.532	MS-7-151
8	8-151	7.875	8.407	MS-8-151

Solder Terminals can be ordered separately.

Terminal Type	Catalog No.
"W"	W-151

Marketed exclusively through distribution.

Barrier Blocks Series 152

1.25 Density, 1/4-28 x 1/2" BH Screw, Open Bottom, Double Row

Cinch

Electrical Characteristics

Voltage Rating: 250 Volts maximum
Current Rating: 70 Amps maximum
Maximum Watts Per Terminal: 54,000

Mechanical Characteristics

Maximum Wire Size: #6
Recommended Tightening Torque: 75 lb.-in.

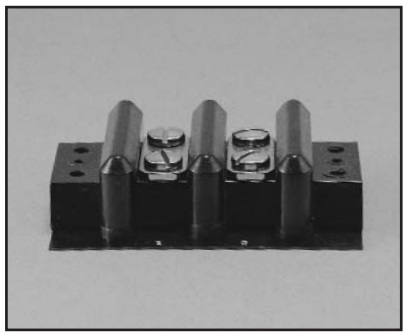

Dimensions

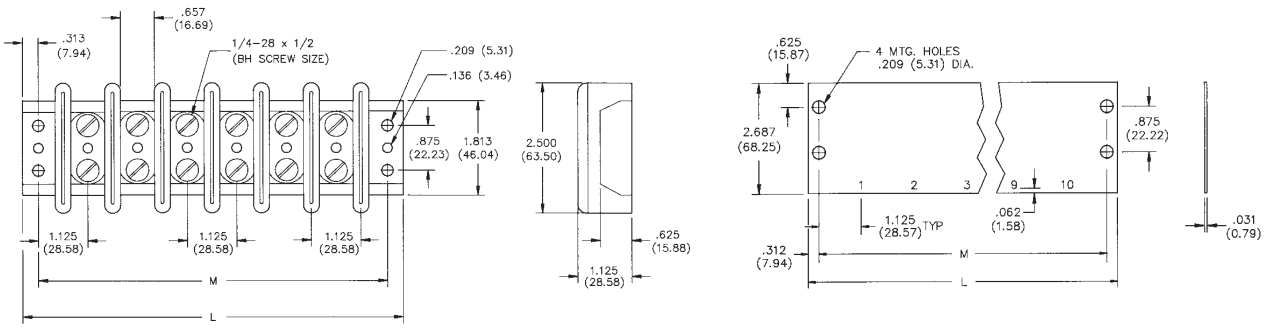

Ordering Information

No. of Terminals	Catalog No.	"M" Dim. (in)	"L" Dim. (in)	Marker Strip Catalog No.
1	1-152	2.250	2.876	N/A
2	2-152	3.375	4.001	MS-2-152
3	3-152	4.500	5.126	MS-3-152
4	4-152	5.625	6.251	MS-4-152
5	5-152	6.750	7.376	MS-5-152
6	6-152	7.875	8.501	MS-6-152

Accessories

None Available for 152 Series.

Marketed exclusively through distribution.

Call Toll Free: 1 (800) 323-9612

.375 Density, 6-32 x 5/16" BH Screw, Open Bottom, Double Row

Cinch

Electrical Characteristics

Voltage Rating: 250 Volts maximum
Current Rating: 15 Amps maximum
Maximum Watts Per Terminal: 3750

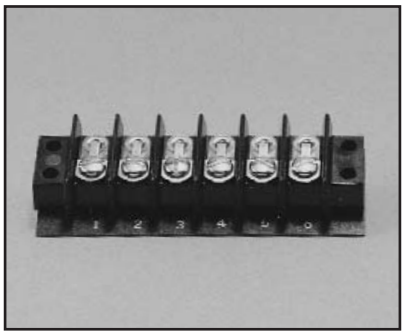

Mechanical Characteristics

Maximum Wire Size: #14
Recommended Tightening Torque: 12 lb.-in.

Dimensions

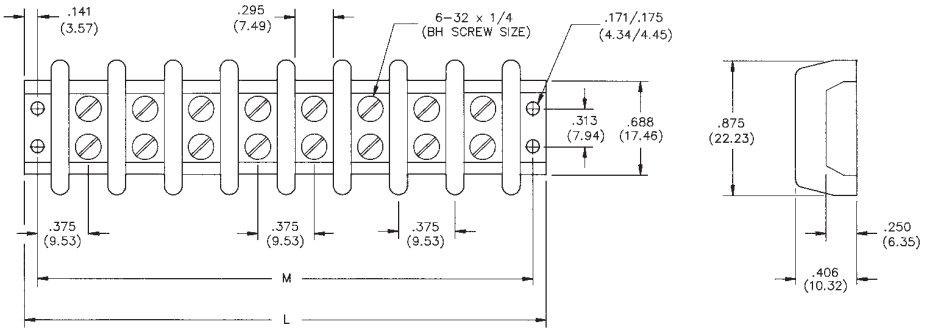

Ordering Information

No. of Terminals	Catalog No.	"M" Dim. (in)	"L" Dim. (in)
1	1-164	0.750	1.032
2	2-164	1.125	1.407
3	3-164	1.500	1.782
4	4-164	1.875	2.157
5	5-164	2.250	2.532
6	6-164	2.625	2.907
7	7-164	3.000	3.282
8	8-164	3.375	3.657
9	9-164	3.750	4.032
10	10-164	4.125	4.407
11	11-164	4.500	4.782
12	12-164	4.875	5.157
13	13-164	5.250	5.532
14	14-164	5.625	5.907
15	15-164	6.000	6.282
16	16-164	6.375	6.657
17	17-164	6.750	7.032
18	18-164	7.125	7.407
19	19-164	7.500	7.782
20	20-164	7.875	8.157
21	21-164	8.250	8.532

Marketed exclusively through distribution.

Solder Terminal Options

Dimensions

"Y" Terminals

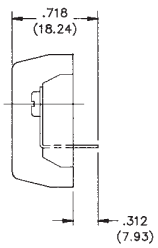

"3/4W" Terminals

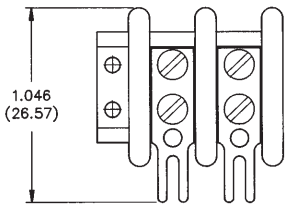

"W" Terminals

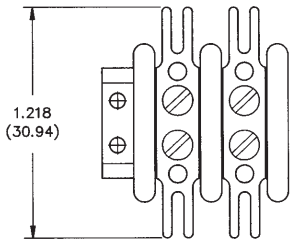

Ordering Information

No. of Terminals	Catalog No.	Catalog No.	Catalog No.
1	1-164-Y	1-164-3/4W	1-164-W
2	2-164-Y	2-164-3/4W	2-164-W
3	3-164-Y	3-164-3/4W	3-164-W
4	4-164-Y	4-164-3/4W	4-164-W
5	5-164-Y	5-164-3/4W	5-164-W
6	6-164-Y	6-164-3/4W	6-164-W
7	7-164-Y	7-164-3/4W	7-164-W
8	8-164-Y	8-164-3/4W	8-164-W
9	9-164-Y	9-164-3/4W	9-164-W
10	10-164-Y	10-164-3/4W	10-164-W
11	11-164-Y	11-164-3/4W	11-164-W
12	12-164-Y	12-164-3/4W	12-164-W
13	13-164-Y	13-164-3/4W	13-164-W
14	14-164-Y	14-164-3/4W	14-164-W
15	15-164-Y	15-164-3/4W	15-164-W
16	16-164-Y	16-164-3/4W	16-164-W
17	17-164-Y	17-164-3/4W	17-164-W
18	18-164-Y	18-164-3/4W	18-164-W
19	19-164-Y	19-164-3/4W	19-164-W
20	20-164-Y	20-164-3/4W	20-164-W
21	21-164-Y	21-164-3/4W	21-164-W

Marketed exclusively through distribution.

2

Marker Strips

Dimensions

Standard

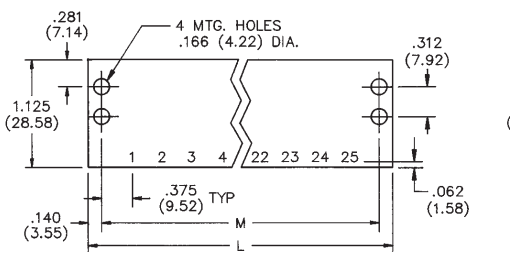

"Y" Terminal

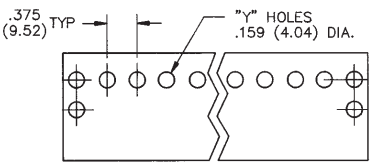

Ordering Information

No. of Terminals	Catalog No.	Catalog No.
1	N/A	N/A
2	MS-2-140	MS-2-140-Y
3	MS-3-140	MS-3-140-Y
4	MS-4-140	MS-4-140-Y
5	MS-5-140	MS-5-140-Y
6	MS-6-140	MS-6-140-Y
7	MS-7-140	MS-7-140-Y
8	MS-8-140	MS-8-140-Y
9	MS-9-140	MS-9-140-Y
10	MS-10-140	MS-10-140-Y
11	MS-11-140	MS-11-140-Y
12	MS-12-140	MS-12-140-Y
13	MS-13-140	MS-13-140-Y
14	MS-14-140	MS-14-140-Y
15	MS-15-140	MS-15-140-Y
16	MS-16-140	MS-16-140-Y
17	MS-17-140	MS-17-140-Y
18	MS-18-140	MS-18-140-Y
19	MS-19-140	MS-19-140-Y
20	MS-20-140	MS-20-140-Y
21	MS-21-140	MS-21-140-Y

Use Standard Marker Strips for "3/4W" and "W" Solder Terminals.

Marketed exclusively through distribution.

.375 Density, 5-40 x 1/4" BH Screw, Closed Bottom, Double Row

Cinch

Electrical Characteristics

Voltage Rating: 600 Volts maximum
Current Rating: 15 Amps
Maximum Watts Per Terminal: 3750

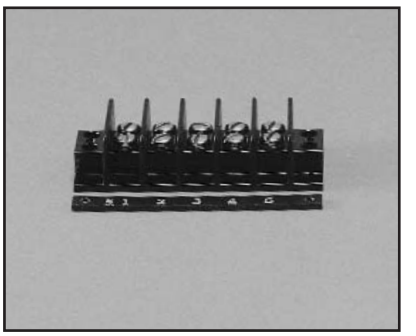

Mechanical Characteristics

Maximum Wire Size: #16
Recommended Tightening Torque: 9 lb.-in.

Dimensions

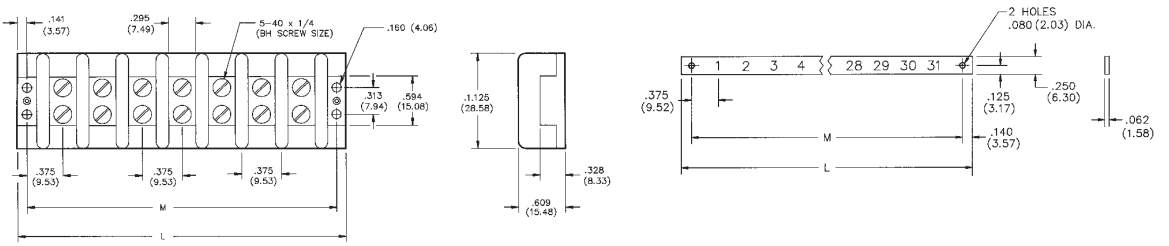

Ordering Information

No. of Terminals	Catalog No.	"M" Dim. (in)	"L" Dim. (in)	Marker Strip Catalog No.
2	2-540	1.125	1.407	MSX-2-540
3	3-540	1.500	1.782	MSX-3-540
4	4-540	1.875	2.157	MSX-4-540
5	5-540	2.250	2.532	MSX-5-540
6	6-540	2.625	2.907	MSX-6-540
7	7-540	3.000	3.282	MSX-7-540
8	8-540	3.375	3.657	MSX-8-540
9	9-540	3.750	4.032	MSX-9-540
10	10-540	4.125	4.407	MSX-10-540
11	11-540	4.500	4.782	MSX-11-540
12	12-540	4.875	5.157	MSX-12-540
13	13-540	5.250	5.532	MSX-13-540
14	14-540	5.625	5.907	MSX-14-540
15	15-540	6.000	6.282	MSX-15-540
16	16-540	6.375	6.657	MSX-16-540
17	17-540	6.750	7.032	MSX-17-540
18	18-540	7.125	7.407	MSX-18-540
19	19-540	7.500	7.782	MSX-19-540
20	20-540	7.875	8.157	MSX-20-540
21	21-540	8.250	8.532	MSX-21-540
22	22-540	8.625	8.907	MSX-22-540
23	23-540	9.000	9.282	MSX-23-540
24	24-540	9.375	9.657	MSX-24-540
25	25-540	9.750	10.032	MSX-25-540
26	26-540	10.125	10.407	MSX-26-540
27	27-540	10.500	10.782	MSX-27-540
28	28-540	10.875	11.157	MSX-28-540
29	29-540	11.250	11.532	MSX-29-540
30	30-540	11.625	11.907	MSX-30-540
31	31-540	12.000	12.282	MSX-31-540

Marketed exclusively through distribution.

.438 Density, 6-32 x 1/4" BH Screw, Closed Bottom, Double Row

Electrical Characteristics

Voltage Rating: 600 Volts maximum
Current Rating: 20 Amps
Maximum Watts Per Terminal: 5000

Mechanical Characteristics

Maximum Wire Size: #14
Recommended Tightening Torque: 12 lb.-in.

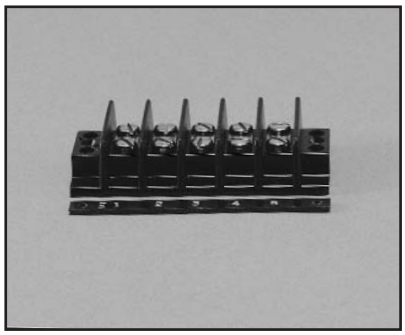

Dimensions

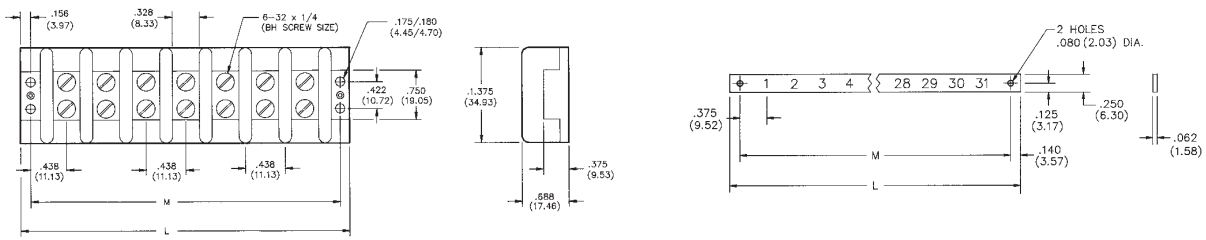

Ordering Information

No. of Terminals	Catalog No.	"M" Dim. (in)	"L" Dim. (in)	Marker Strip Catalog No.
2	2-541	1.314	1.626	MSX-2-541
3	3-541	1.752	2.064	MSX-3-541
4	4-541	2.190	2.502	MSX-4-541
5	5-541	2.628	2.940	MSX-5-541
6	6-541	3.066	3.378	MSX-6-541
7	7-541	3.504	3.816	MSX-7-541
8	8-541	3.942	4.254	MSX-8-541
9	9-541	4.380	4.692	MSX-9-541
10	10-541	4.818	5.130	MSX-10-541
11	11-541	5.256	5.568	MSX-11-541
12	12-541	5.694	6.006	MSX-12-541
13	13-541	6.132	6.444	MSX-13-541
14	14-541	6.570	6.882	MSX-14-541
15	15-541	7.008	7.320	MSX-15-541
16	16-541	7.446	7.758	MSX-16-541
17	17-541	7.884	8.196	MSX-17-541
18	18-541	8.322	8.634	MSX-18-541
19	19-541	8.760	9.072	MSX-19-541
20	20-541	9.198	9.510	MSX-20-541
21	21-541	9.636	9.948	MSX-21-541
22	22-541	10.074	10.386	MSX-22-541
23	23-541	10.512	10.824	MSX-23-541
24	24-541	10.950	11.262	MSX-24-541
25	25-541	11.388	11.700	MSX-25-541
26	26-541	11.826	12.138	MSX-26-541
27	27-541	12.264	12.576	MSX-27-541
28	28-541	12.702	13.014	MSX-28-541
29	29-541	13.140	13.452	MSX-29-541
30	30-541	13.578	13.890	MSX-30-541

Marketed exclusively through distribution.

.563 Density, 8-32 x 5/16" BH Screw, Closed Bottom, Double Row

Cinch

Electrical Characteristics

Voltage Rating: 600 Volts maximum
Current Rating: 30 Amps
Maximum Watts Per Terminal: 7500

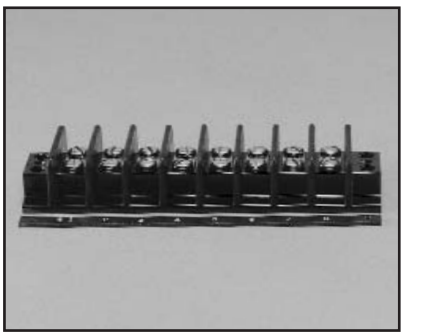

Mechanical Characteristics

Maximum Wire Size: #10
Recommended Tightening Torque: 16 lb.-in.

Dimensions

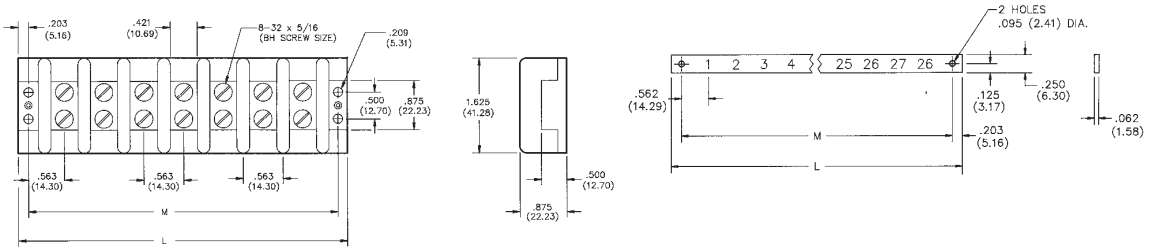

Ordering Information

No. of Terminals	Catalog No.	"M" Dim. (in)	"L" Dim. (in)	Marker Strip Catalog No.
2	2-542	1.689	2.095	MSX-2-542
3	3-542	2.252	2.658	MSX-3-542
4	4-542	2.815	3.221	MSX-4-542
5	5-542	3.378	3.784	MSX-5-542
6	6-542	3.941	4.347	MSX-6-542
7	7-542	4.504	4.910	MSX-7-542
8	8-542	5.067	5.473	MSX-8-542
9	9-542	5.630	6.036	MSX-9-542
10	10-542	6.193	6.599	MSX-10-542
11	11-542	6.756	7.162	MSX-11-542
12	12-542	7.319	7.725	MSX-12-542
13	13-542	7.882	8.288	MSX-13-542
14	14-542	8.445	8.851	MSX-14-542
15	15-542	9.008	9.414	MSX-15-542
16	16-542	9.571	9.977	MSX-16-542
17	17-542	10.134	10.540	MSX-17-542
18	18-542	10.697	11.103	MSX-18-542
19	19-542	11.260	11.666	MSX-19-542
20	20-542	11.823	12.229	MSX-20-542
21	21-542	12.386	12.792	MSX-21-542
22	22-542	12.949	13.355	MSX-22-542
23	23-542	13.512	13.918	MSX-23-542
24	24-542	14.075	14.481	MSX-24-542
25	25-542	14.638	15.044	MSX-25-542
26	26-542	15.201	15.607	MSX-26-542

Marketed exclusively through distribution.

Barrier Blocks
Series 176

.375 Density, 5-40 x 3/16" BH Screw, Dip Solder, Single Row

Cinch

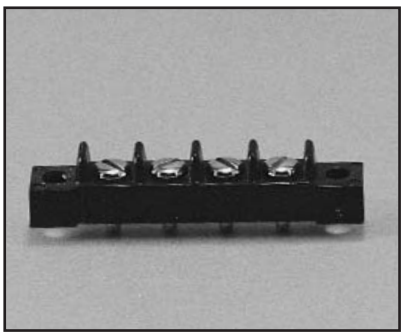

Electrical Characteristics

Voltage Rating: 250 Volts maximum
Current Rating: 15 Amps maximum
Maximum Watts Per Terminal: 3750

Mechanical Characteristics

Maximum Wire Size: 16 AWG
Recommended Tightening Torque: 16 lb.-in.

Dimensions

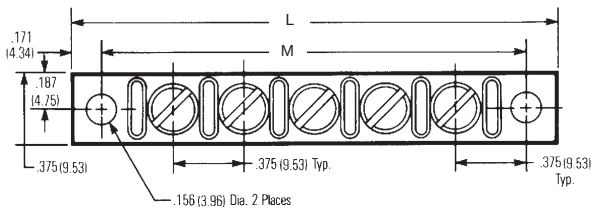

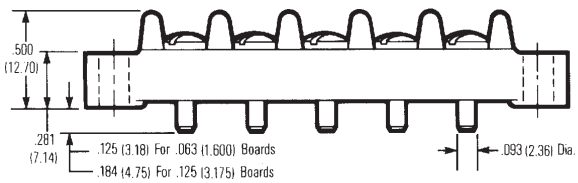

Ordering Information

No. of Terminals	With Mounting Ears Catalog No. .125 Tail Lgth	Catalog No. .184 Tail Lgth	"M" Dimension	"L" Dimension
2	2-176-2	2-176-3	1.125	1.469
3	3-176-2	3-176-3	1.500	1.844
4	4-176-2	4-176-3	1.875	2.219
5	5-176-2	5-176-3	2.250	2.594
6	6-176-2	6-176-3	2.625	2.969
7	7-176-2	7-176-3	3.000	3.344
8	8-176-2	8-176-3	3.375	3.719
9	9-176-2	9-176-3	3.375	4.094
10	10-176-2	10-176-3	4.125	4.469

No. of Terminals	Without Mounting Ears Catalog No. .125 Tail Lgth	Catalog No. .184 Tail Lgth	"L" Dimension
2	2-176-2A	2-176-3A	.719
3	3-176-2A	3-176-3A	1.094
4	4-176-2A	4-176-3A	1.469
5	5-176-2A	5-176-3A	1.844
6	6-176-2A	6-176-3A	2.219
7	7-176-2A	7-176-3A	2.594
8	8-176-2A	8-176-3A	2.969
9	9-176-2A	9-176-3A	3.344
10	10-176-2A	10-176-3A	3.719
11	11-176-2A	11-176-3A	4.094
12	12-176-2A	12-176-3A	4.469

Marketed exclusively through distribution.

Call Toll Free: 1 (800) 323-9612

Solder Terminals
3/4W, Y, and W

Optional Terminals for use with Cinch terminal blocks.
See chart for type and dimensions. (Below)

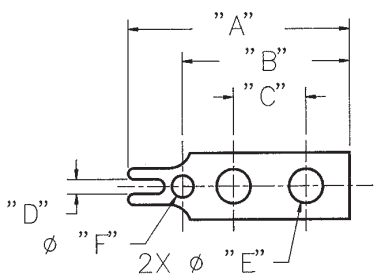

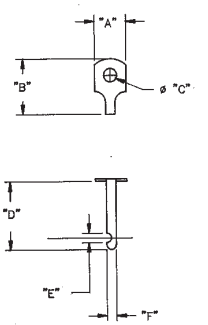

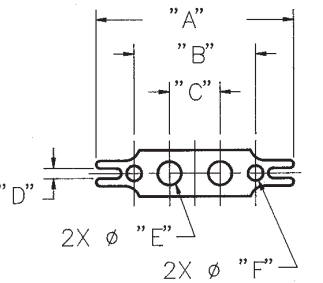

Ordering Information

"3/4 W" Terminals - Dimensions

Catalog	A		B		C		D		E		F	
Number	in	mm	in	mm	in	mm	in	mm	in	mm	in	mm
3/4W-140	.953	24.21	.719	18.20	.312	7.92	.062	1.57	.146	3.71	.094	2.39
3/4W-141	1.156	29.36	.680	17.27	.422	10.72	.078	1.98	.152	3.86	.125	3.18
3/4W-142	1.422	36.11	.797	20.24	.500	12.70	.094	2.39	.177	4.50	.125	3.18

"Y" Terminals - Dimensions

Catalog	A		B		C		D		E		F	
Number	in	mm	in	mm	in	mm	in	mm	in	mm	in	mm
Y-140	.281	7.14	.500	12.70	.136	3.45	.593	15.06	.093	2.36	.091	2.31
Y-141	.312	7.92	.625	15.88	.152	3.86	.781	19.83	.125	3.18	.103	2.62
Y-142	.421	10.69	.734	18.64	.177	4.50	.906	23.01	.125	3.18	.126	3.20

"W" Terminals - Dimensions

Catalog	A		B		C		D		E		F	
Number	in	mm	in	mm	in	mm	in	mm	in	mm	in	mm
W-140	1.219	30.96	.750	19.05	.312	7.92	.063	1.60	.146	3.71	.094	2.39
W-141	1.563	39.70	.938	23.83	.422	10.72	.078	1.98	.152	3.86	.125	3.18
W-142	1.875	47.63	1.094	27.79	.500	12.70	.094	2.39	.177	4.50	.125	3.18

Marketed exclusively through distribution.

Quick Clamp Terminals

Simplifies engaging of wires to barrier blocks. Wire is inserted into flared opening and screw is tightened. Screws are brass binder head type with nickel plating. Terminals are brass with tin plating. Includes two mating clamps and one screw.

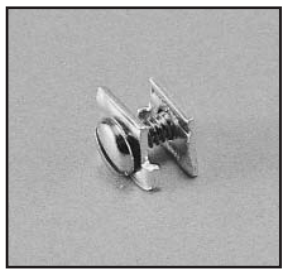

QC-1
Shown

Ordering Information

Barrier Block Series	Catalog No.	Screw Size	Wire Gauge Range AWG
141, 541	QC-1	6-32x5/16"	12 thru 22
142, 542	QC-2	8-32x3/8"	10 thru 16

Jumpers

For connecting between adjacent terminals or alternate terminals. All jumpers are brass with nickel plating.

Ordering Information

Barrier Block Series	Type	Catalog No.
140	A	140J-1
141	B	141J-1
141	F	141J
142	F	95B
142, 542	D	142J-1*
142, 542	E	142J-2
540	C	540J
541	C	541J
542	C	542J

* Connects two alternate terminals

Type A

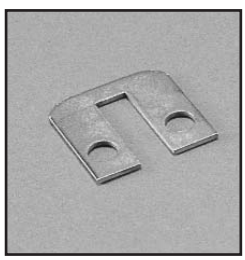

Type B

Type C

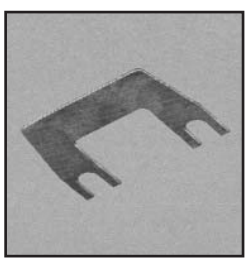

Type D

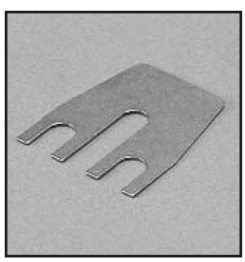

Type E

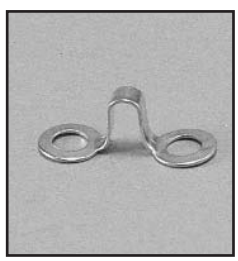

Type F

Marketed exclusively through distribution.

Features

- ***Minimize wiring errors.***
- ***Available in straight and right-angle styles.***
- ***Available with cable clamp hole on right or left side, designated by "L" or "R" at end of catalog number.***
- ***Cable clamp hole for securing cable/wires with lacing twine or ty-wrap.***

Materials

Insulation Material: UL 94HB rated XPC, chocolate

Contact Material: Brass

Contact Plating: Cadmium

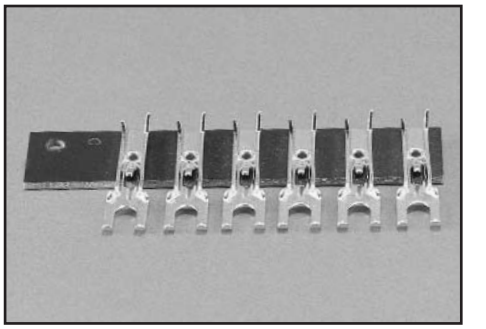

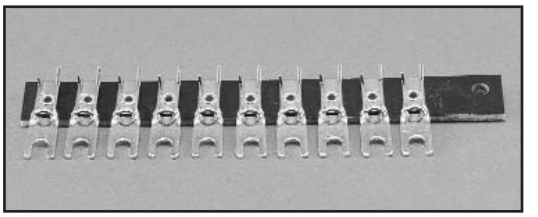

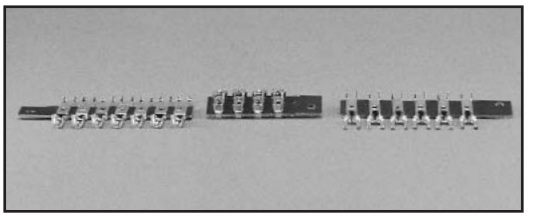

Marketed exclusively through distribution.

Catalog Numbers and Dimensions for Fanning Strips for 140 Series Terminal Blocks

Straight Type

Dimensions

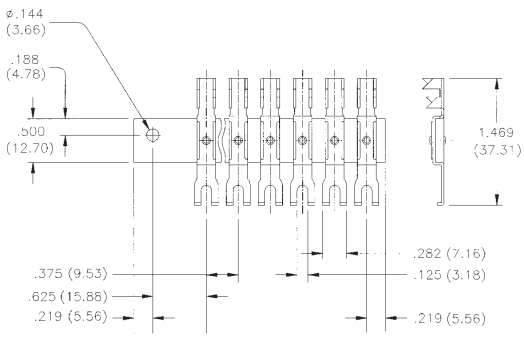

Catalog No. 6-160-R

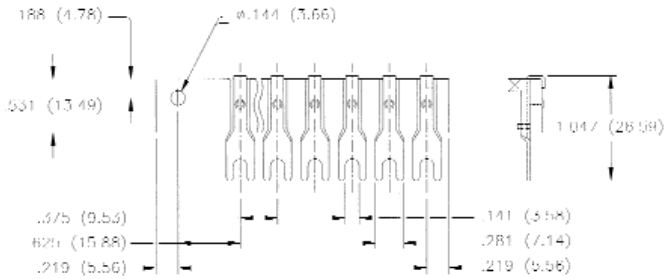

Catalog No. 6-160B-R

Ordering Information

No. of Terminals	Catalog No.	Catalog No.	Catalog No.	Catalog No.
2	2-160-R	2-160-L	2-160B-R	2-160B-L
3	3-160-R	3-160-L	3-160B-R	3-160B-L
4	4-160-R	4-160-L	4-160B-R	4-160B-L
5	5-160-R	5-160-L	5-160B-R	5-160B-L
6	6-160-R	6-160-L	6-160B-R	6-160B-L
7	7-160-R	7-160-L	7-160B-R	7-160B-L
8	8-160-R	8-160-L	8-160B-R	8-160B-L
9	9-160-R	9-160-L	9-160B-R	9-160B-L
10	10-160-R	10-160-L	10-160B-R	10-160B-L
11	11-160-R	11-160-L	11-160B-R	11-160B-L
12	12-160-R	12-160-L	12-160B-R	12-160B-L
13	13-160-R	13-160-L	13-160B-R	13-160B-L
14	14-160-R	14-160-L	14-160B-R	14-160B-L
15	15-160-R	15-160-L	15-160B-R	15-160B-L
16	16-160-R	16-160-L	16-160B-R	16-160B-L
17	17-160-R	17-160-L	17-160B-R	17-160B-L
18	18-160-R	18-160-L	18-160B-R	18-160B-L
19	19-160-R	19-160-L	19-160B-R	19-160B-L
20	20-160-R	20-160-L	20-160B-R	20-160B-L
21	21-160-R	21-160-L	21-160B-R	21-160B-L

Marketed exclusively through distribution.

Catalog Numbers and Dimensions for Fanning Strips for 140 Series Terminal Blocks, Continued

Right-Angle Type

Dimensions

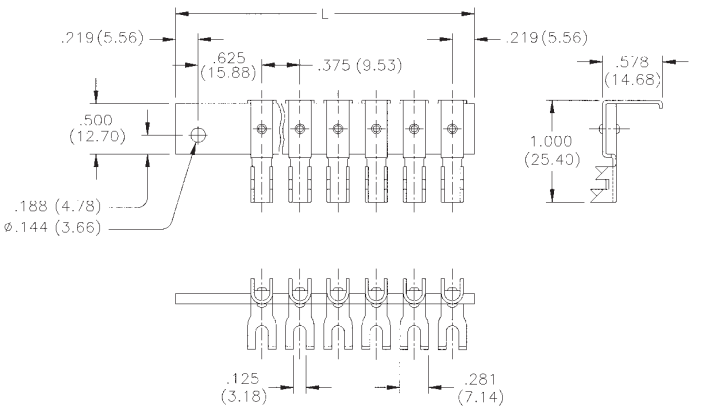

Catalog No. 6-160A-R

Ordering Information

No. of Terminals	Catalog No.	Catalog No.
2	2-160A-R	2-160A-L
3	3-160A-R	3-160A-L
4	4-160A-R	4-160A-L
5	5-160A-R	5-160A-L
6	6-160A-R	6-160A-L
7	7-160A-R	7-160A-L
8	8-160A-R	8-160A-L
9	9-160A-R	9-160A-L
10	10-160A-R	10-160A-L
11	11-160A-R	11-160A-L
12	12-160A-R	12-160A-L
13	13-160A-R	13-160A-L
14	14-160A-R	14-160A-L
15	15-160A-R	15-160A-L
16	16-160A-R	16-160A-L
17	17-160A-R	17-160A-L
18	18-160A-R	18-160A-L
19	19-160A-R	19-160A-L
20	20-160A-R	20-160A-L
21	21-160A-R	21-160A-L

Marketed exclusively through distribution.

Catalog Numbers and Dimensions for Fanning Strips for 141 Series Terminal Blocks

Straight Type

No. of Terminals	Catalog No.	Catalog No.
2	2-161-R	2-161-L
3	3-161-R	3-161-L
4	4-161-R	4-161-L
5	5-161-R	5-161-L
6	6-161-R	6-161-L
7	7-161-R	7-161-L
8	8-161-R	8-161-L
9	9-161-R	9-161-L
10	10-161-R	10-161-L
11	11-161-R	11-161-L
12	12-161-R	12-161-L
13	13-161-R	13-161-L
14	14-161-R	14-161-L
15	15-161-R	15-161-L
16	16-161-R	16-161-L
17	17-161-R	17-161-L
18	18-161-R	18-161-L
19	19-161-R	19-161-L
20	20-161-R	20-161-L

Dimensions

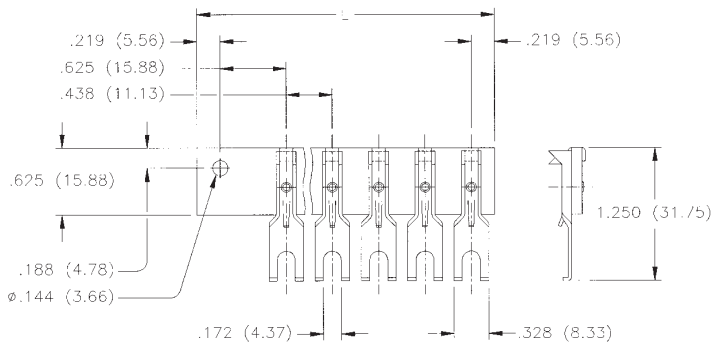

Catalog No. 5-161-R

Right-Angle Type

No. of Terminals	Catalog No.	Catalog No.
2	2-161A-R	2-161A-L
3	3-161A-R	3-161A-L
4	4-161A-R	4-161A-L
5	5-161A-R	5-161A-L
6	6-161A-R	6-161A-L
7	7-161A-R	7-161A-L
8	8-161A-R	8-161A-L
9	9-161A-R	9-161A-L
10	10-161A-R	10-161A-L
11	11-161A-R	11-161A-L
12	12-161A-R	12-161A-L
13	13-161A-R	13-161A-L
14	14-161A-R	14-161A-L
15	15-161A-R	15-161A-L
16	16-161A-R	16-161A-L
17	17-161A-R	17-161A-L
18	18-161A-R	18-161A-L
19	19-161A-R	19-161A-L
20	20-161A-R	20-161A-L

Dimensions

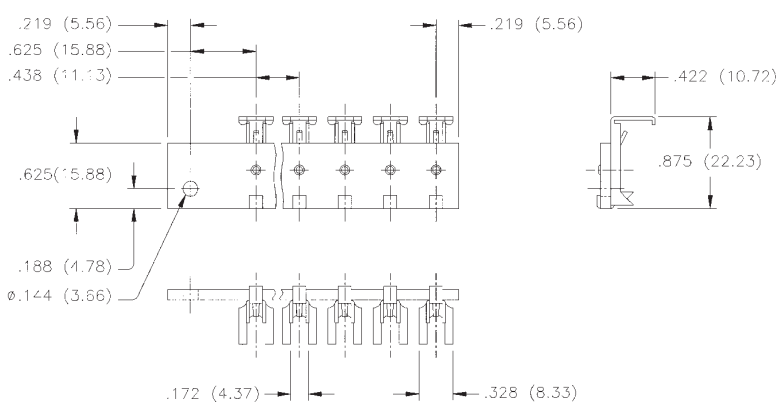

Catalog No. 5-161A-R

Marketed exclusively through distribution.

Catalog Numbers and Dimensions for Fanning Strips for 142 Series Barrier Blocks

Straight Type

Ordering Information

No. of Terminals	Catalog No.	Catalog No.
2	2-162-R	2-162-L
3	3-162-R	3-162-L
4	4-162-R	4-162-L
5	5-162-R	5-162-L
6	6-162-R	6-162-L
7	7-162-R	7-162-L
8	8-162-R	8-162-L
9	9-162-R	9-162-L
10	10-162-R	10-162-L
11	11-162-R	11-162-L
12	12-162-R	12-162-L
13	13-162-R	13-162-L
14	14-162-R	14-162-L
15	15-162-R	15-162-L
16	16-162-R	16-162-L
17	17-162-R	17-162-L

Dimensions

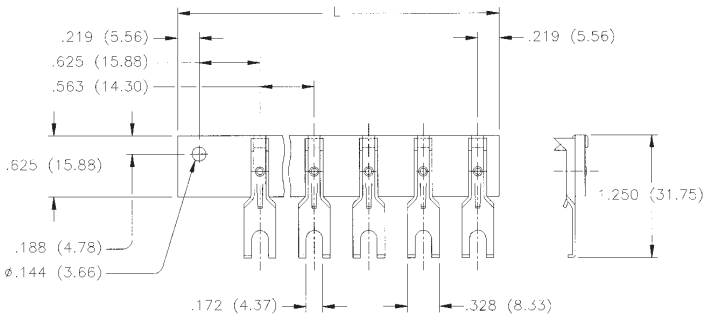

Catalog No. 5-162-R

Right-Angle Type

Ordering Information

No. of Terminals	Catalog No.	Catalog No.
2	2-162A-R	2-162A-L
3	3-162A-R	3-162A-L
4	4-162A-R	4-162A-L
5	5-162A-R	5-162A-L
6	6-162A-R	6-162A-L
7	7-162A-R	7-162A-L
8	8-162A-R	8-162A-L
9	9-162A-R	9-162A-L
10	10-162A-R	10-162A-L
11	11-162A-R	11-162A-L
12	12-162A-R	12-162A-L
13	13-162A-R	13-162A-L
14	14-162A-R	14-162A-L
15	15-162A-R	15-162A-L
16	16-162A-R	16-162A-L
17	17-162A-R	17-162A-L

Dimensions

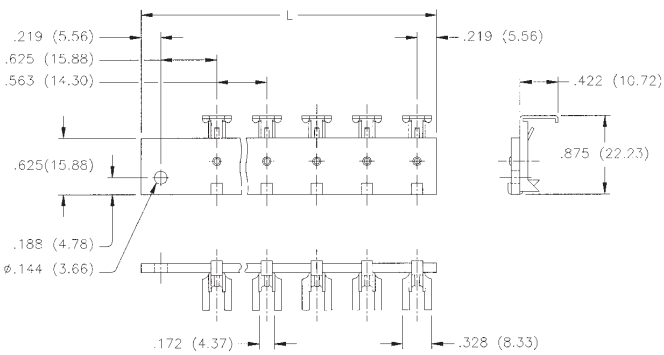

Catalog No. 5-162A-R

Marketed exclusively through distribution.

Materials

Insulation Material: UL 94 HB rated XPC, chocolate
Contact Material: Steel
Contact Plating: Cadmium

Mechanical Characteristics

Mounting Hole: .140" (3.56mm) diameter
Strip Dimension: .0625" (1.59mm) thick x .375" (9.53mm) wide
Lug Density: .375" (9.53mm)

Ordering Information

Catalog No.	Mounting Centers	Lug Type Used In Position 1	2	3	4	5	6	7	8
51	-	1	2						
51A	-	1	4						
51B	-	2	1						
51C	-	4	1						
51F	-	1/2							
51L	-	3	1						
51R	-	1	3						
52	-	1	2	1					
52A	-	1	4	1					
52B	-	2	1	1					
52C	-	4	1	1					
52R	-	1	1	3					
53	1.500 (38.10)	2	1	1	1	2			
53A	1.500 (38.10)	4	1	1	1	4			
53B	.750 (19.05)	1	2	1	2	1			
53C	.750 (19.05)	1	4	1	4	1			
53E	-	1	2	1	1				
53F	-	1	4	1	1				
54	1.875 (47.63)	2	1	1	1	1	2		
54A	1.875 (47.63)	4	1	1	1	1	4		
54B	-	1	1	2	1	1			
54C	-	1	1	4	1	1			
55	2.250 (57.15)	2	1	1	1	1	1	2	
55A	2.250 (57.15)	4	1	1	1	1	1	4	
55B	1.500 (38.10)	1	2	1	1	1	2	1	
55C	1.500 (38.10)	1	4	1	1	1	4	1	
56	2.625 (66.68)	2	1	1	1	1	1	1	2
56A	2.625 (66.68)	4	1	1	1	1	1	1	4
56B	1.875 (47.63)	1	2	1	1	1	1	2	1
56C	1.875 (47.63)	1	4	1	1	1	1	4	1

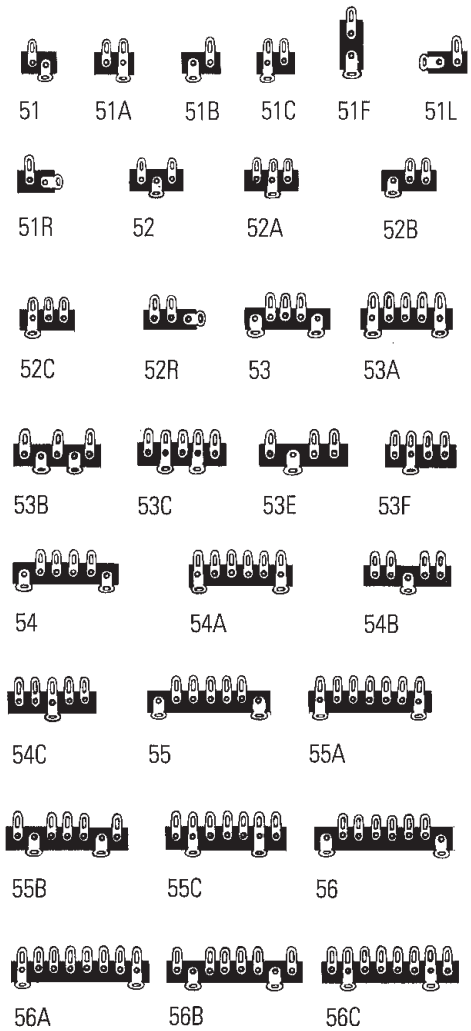

Dimensions

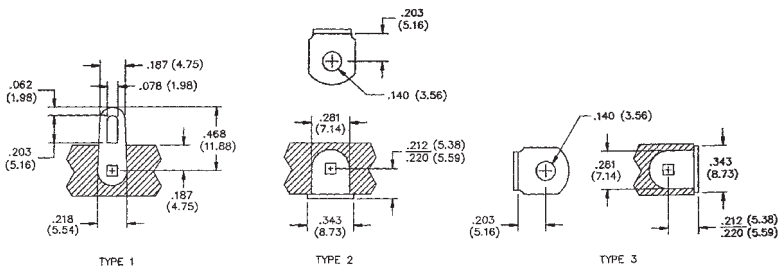

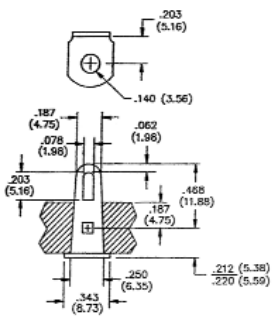

Marketed exclusively through distribution.

Jones Plugs/Sockets Series 300

Multiple Density
Solder Eyelet

Cinch

Features

- *Solder lug terminals with .093" x .062" (2.36mm x 1.57mm) wiring holes.*
- *Two-contact "Jones" connector is round, all others are rectangular.*
- *For use in cable-to-panel and cable-to-cable applications.*
- *Designed for light and medium duty.*
- *Plug prongs are .156" (3.96mm) wide and .047" (1.19mm) thick.*
- *Polarized to prevent wrong-way insertion.*
- *Plugs have projecting flat blades, sockets have recessed twin bellows.*
- *Cable clamps of zinc and clear irridite-plated steel used for strain relief.*
- *UL Recognized-file E170218 (UL 1977), E130965 (UL1863).*
- *CSA-LR31996.*
- *See Panel Cutout dimension on page (2-38).*

Materials

Insulation Material: Molded monoblock, general purpose phenolic, black UL94V-1

Contact Material: Plug: Brass
Socket: Phosphor bronze

Contact Plating: Cadmium

Operating Temperature: Up to +105°C

Hood Material: UL 94V-0 rated thermoplastic

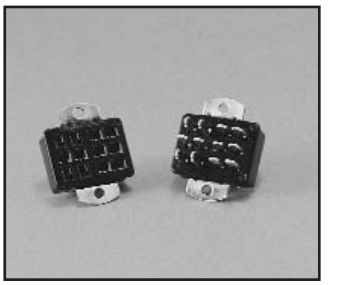

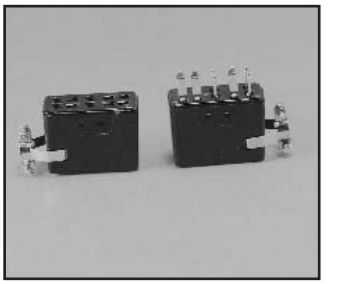

Electrical

Operating Voltage:	250 VAC RMS maximum
Current Rating:	10 Amps
Contact Resistance:	16 Milliohms maximum

Marketed exclusively through distribution.

Polarizing Patterns - 300 Series

302

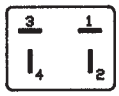

304

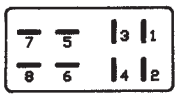

308

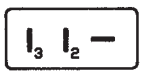

303

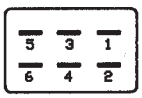

306

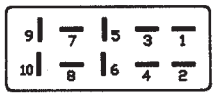

310

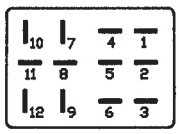

312

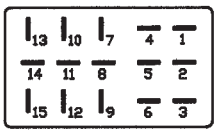

315–12

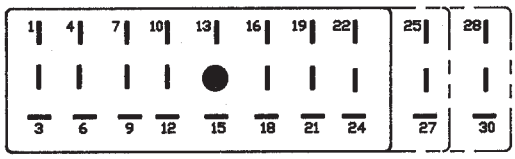

324,327,330

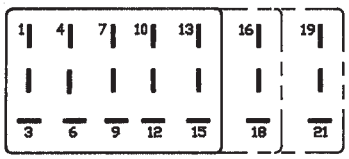

315,318,321

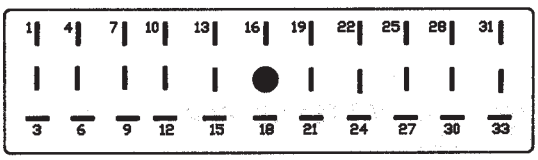

333

Marketed exclusively through distribution.

2

Mounting Dimensions

	A		B		C		D	
Reference	in	mm	in	mm	in	mm	in	mm
303	.453	11.51	1.016	25.81	.750	19.05	-	-
304	.719	18.26	.781	19.84	1.000	25.40	-	-
306	.719	18.26	1.031	26.19	1.000	25.40	-	-
308	.719	18.26	1.281	32.54	1.000	25.40	-	-
310	.719	18.26	1.578	40.08	1.000	25.40	-	-
312	.953	24.21	1.266	32.16	1.250	31.75	-	-
315-12	.953	24.21	1.516	38.51	1.250	31.75	-	-
315	1.016	25.81	1.641	41.68	1.375	34.93	-	-
318	1.016	25.81	1.953	49.61	1.375	34.93	.625	15.88
321	1.016	25.81	2.266	57.56	1.375	34.93	.469	11.91
324	1.016	25.81	2.578	65.48	1.375	34.93	.625	15.88
327	1.016	25.81	2.891	73.43	1.375	34.93	.781	19.84
330	1.016	25.81	3.203	81.36	1.375	34.93	.938	23.83
333	1.016	25.81	3.516	89.31	1.375	34.93	1.094	27.79

NOTE: For 300 Series 2 through 33 contact angle bracket connectors. All mounting holes are .156" (3.96mm) dia. Maximum chassis thickness is .063" (1.59mm) for bottom mounting. Mounting holes are located on center line unless otherwise shown.

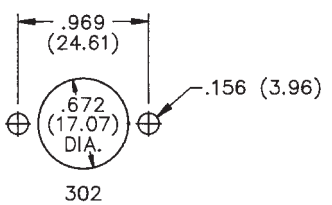

302

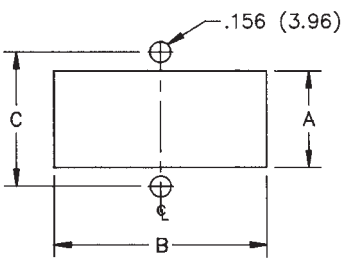

304, 308, 310, 312, 315

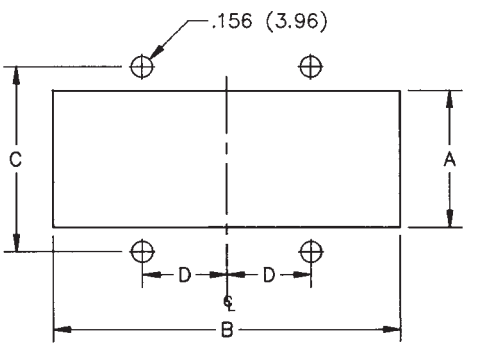

318, 321, 324, 327, 330, 333

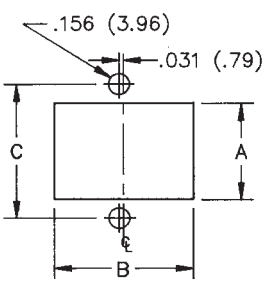

303, 306

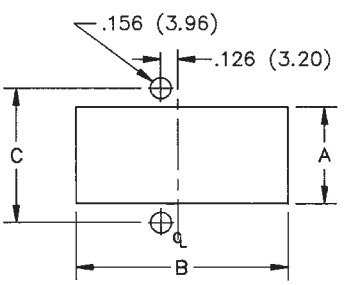

315–12

Marketed exclusively through distribution.

With Angle Bracket			Less Angle Bracket		
No. of Contacts	Catalog No. Plug	Catalog No. Socket	No. of Contacts	Catalog No. Plug	Catalog No. Socket
2	P-302-AB	S-302-AB	2	P-302-LAB	S-302-LAB
3	P-303-AB	S-303-AB	3	P-303-LAB	S-303-LAB
4	P-304-AB	S-304-AB	4	P-304-LAB	S-304-LAB
6	P-306-AB	S-306-AB	6	P-306-LAB	S-306-LAB
8	N/A	N/A	8	N/A	N/A
10	P-310-AB	N/A	10	P-310-LAB	N/A
12	P-312-AB	N/A	12	P-312-LAB	N/A
15*	N/A	S-315-12-AB	15	N/A	S-315-12-LAB
15	P-315-AB	S-315-AB	15	P-315-LAB	S-315-LAB
18	P-318-AB	S-318-AB	18	P-318-LAB	S-318-LAB
21	P-321-AB	S-321-AB	21	P-321-LAB	S-321-LAB
24	P-324-AB	S-324-AB	24	P-324-LAB	S-324-LAB
27	P-327-AB	S-327-AB	27	P-327-LAB	S-327-LAB
30	P-330-AB	S-330-AB	30	P-330-LAB	S-330-LAB
33	P-333-AB	S-333-AB	33	P-333-LAB	S-333-LAB

X = length of plug contacts. This dimension does not apply to sockets.
Y = length of plug or socket tails.

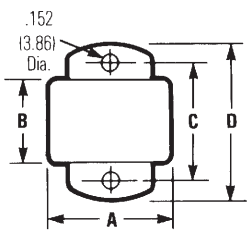

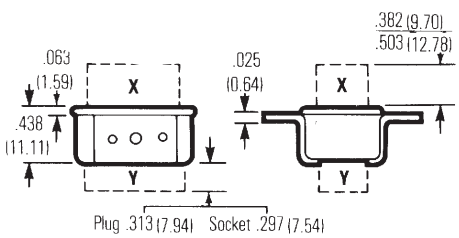

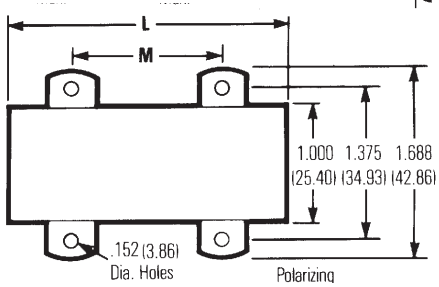

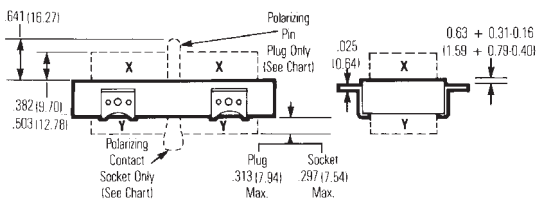

No. of Contacts	A in	A mm	B in	B mm	C in	C mm	D in	D mm
2	.656	16.67	-	-	.969	24.61	1.219	30.96
3	1.000	25.40	.438	11.11	.750	19.05	1.062	26.99
4	.750	19.05	.688	17.46	1.000	25.40	1.312	33.34
6	1.000	25.40	.688	17.46	1.000	25.40	1.312	33.34
8	--	--	--	--	--	--	--	--
10	1.562	39.69	.688	17.46	1.000	25.40	1.312	33.34
12	1.250	31.75	.938	23.81	1.250	31.75	1.562	39.69
15*	1.500	38.10	.938	23.81	1.250	31.75	1.562	39.69

*Special 15 contact arrangement to allow 12-position mating.

Reference	L in	L mm	M in	M mm	Polarizing Pin
15	1.625	41.28	See note	-	NO
18	1.938	49.23	1.250	31.75	NO
21	2.250	57.15	.938	23.81	NO
24	2.563	65.10	1.250	31.75	14
27	2.875	73.03	1.562	39.69	14
30	3.188	80.98	1.875	47.63	14
33	3.500	88.90	2.188	55.58	17

NOTE: 15-position plug and socket require only two mounting brackets, mounted on center of connector.

Marketed exclusively through distribution.

2

300 Series with Flush Plate (FP)

No. of Contacts	Catalog No. Plug	Catalog No. Socket
2	P-302-FP	S-302-FP
3	P-303-FP	S-303-FP
4	P-304-FP	S-304-FP
6	P-306-FP	S-306-FP
8	N/A	N/A
10	P-310-FP	N/A
12	P-312-FP	N/A

NOTE: Not available in contact sizes 15-33.

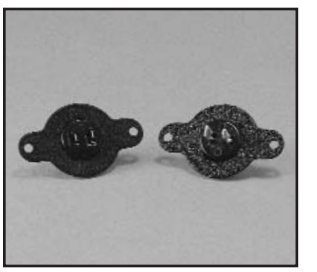

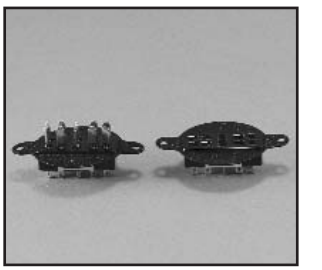

X = length of plug contacts. This dimension does not apply to sockets.
Y = length of plug or socket tails.

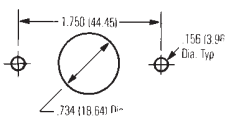

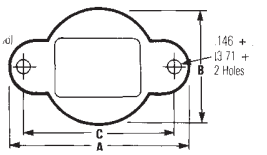

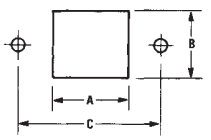

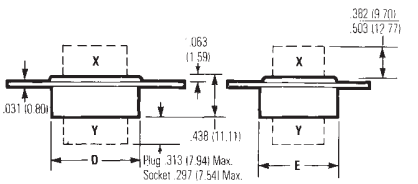

Dimensions - Plug or Socket

No. of Contacts	A in	A mm	B in	B mm	C in	C mm	D in	D mm	E Max. in	E Max. mm
2	2.063	52.40	1.250	31.75	1.750	44.45	-	-	.719	18.26
3	2.063	52.40	1.250	31.75	1.750	44.45	.938	23.81	.500	12.70
4	2.063	52.40	1.250	31.75	1.750	44.45	.688	17.46	.750	19.05
6	2.063	52.40	1.250	31.75	1.750	44.45	.938	23.81	.750	19.05
8	--	--	--	--	--	--	--	--	--	--
10	2.563	65.10	1.750	44.45	2.250	57.15	1.500	38.10	.750	19.05
12	2.563	65.10	1.750	44.45	2.250	57.15	1.188	30.16	1.000	25.40

Panel Cutout Dimensions

Reference	A in	A mm	B in	B mm	C in	C mm
303-FP	.953	24.21	.516	13.11	1.750	44.45
304-FP	.703	17.86	.766	19.46	1.750	44.45
306-FP	.953	24.21	.766	19.46	1.750	44.45
308-FP	--	--	--	--	--	--
310-FP	1.516	38.51	.766	19.46	2.250	57.15
312-FP	1.203	30.56	1.016	25.81	2.250	57.15

Marketed exclusively through distribution.

300 Series with End Brackets (EB)

No. of Contacts	Catalog No. Plug	Catalog No. Socket
15	P-315-EB	S-315-EB
18	P-318-EB	S-318-EB
21	P-321-EB	S-321-EB
24	P-324-EB	S-324-EB
28	P-328-EB	S-328-EB
30	P-330-EB	S-330-EB
33	P-333-EB	S-333-EB

NOTE: Not available in contact sizes 2-12.

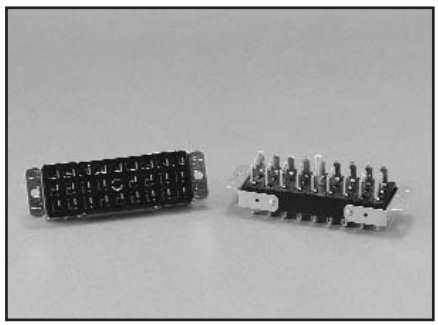

X = length of plug contacts. This dimension does not apply to sockets.
Y = length of plug or socket tails.

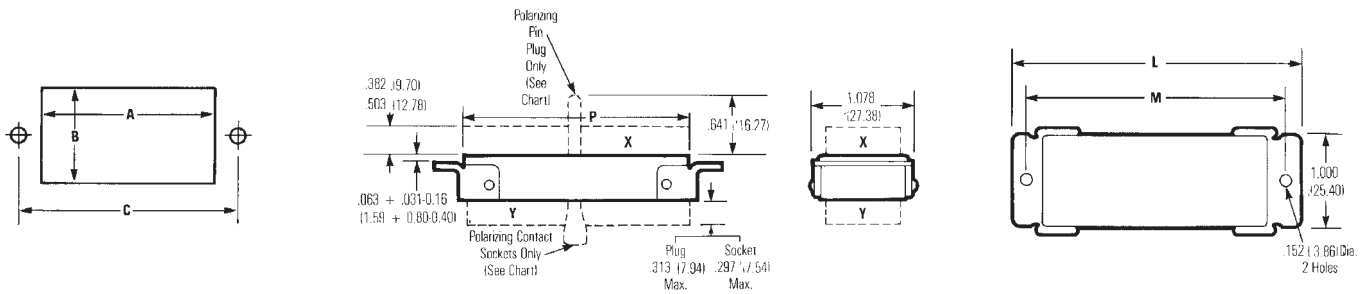

Dimensions

No. of Contacts	L ±.031 (.79mm)		M ±.031 (.79mm)		P ±.063 (1.59mm)		Polarizing Pin
15	2.313	58.75	2.000	50.80	1.625	41.28	NO
18	2.625	66.68	2.313	58.75	1.938	49.23	NO
21	2.938	74.63	2.625	66.68	2.250	57.15	NO
24	3.250	82.55	2.938	74.63	2.563	65.10	14
27	3.563	90.50	3.250	82.55	2.875	73.03	14
30	3.875	98.43	3.563	90.50	3.188	80.98	14
33	4.188	106.38	3.875	98.43	3.500	88.90	17

Panel Cutout Dimensions

	A		B		C	
Reference	in	mm	in	mm	in	mm
315-EB	1.641	41.68	1.016	25.81	2.000	50.80
318-EB	1.953	49.61	1.016	25.81	2.313	58.75
321-EB	2.266	57.56	1.016	25.81	2.625	66.68
324-EB	2.578	65.48	1.016	25.81	2.938	74.63
327-EB	2.891	73.43	1.016	25.81	3.250	82.55
330-EB	3.203	81.36	1.016	25.81	3.563	90.50
333-EB	3.516	89.31	1.016	25.81	3.875	98.43

Marketed exclusively through distribution.

300 Series with Recessed Plate (RP)

No. of Contacts	Catalog No. Plug	Catalog No. Socket
2	P-302-RP	S-302-RP
3	P-303-RP	S-303-RP
4	P-304-RP	S-304-RP
6	P-306-RP	S-306-RP
8	N/A	N/A
10	P-310-RP	N/A
12	P-312-RP	N/A

NOTE: Not available in contact sizes 15-33.

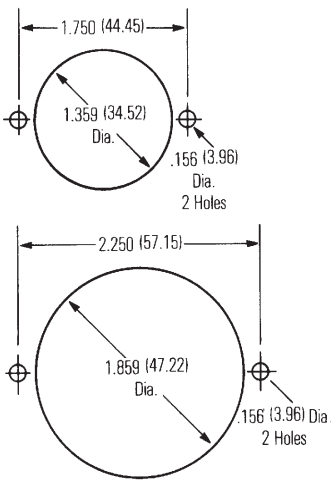

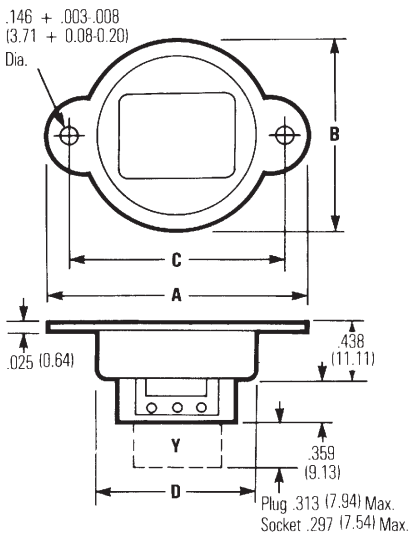

Y = length of plug or socket tails.

Dimensions

No. of Contacts	A in	A mm	B in	B mm	C in	C mm	D Max. in	D Max. mm
2	2.063	52.40	1.500	38.10	1.750	44.45	1.350	34.29
3	2.063	52.40	1.500	38.10	1.750	44.45	1.350	34.29
4	2.063	52.40	1.500	38.10	1.750	44.45	1.350	34.29
6	2.063	52.40	1.500	38.10	1.750	44.45	1.350	34.29
8	--	--	--	--	--	--	--	--
10	2.563	65.10	2.000	50.80	2.250	57.15	1.850	46.99
12	2.563	65.10	2.000	50.80	2.250	57.15	1.850	46.99

Marketed exclusively through distribution.

300 Series with Shallow Bracket (SB)

No. of Contacts	Catalog No. Plug	Catalog No. Socket
15	P-315-SB	S-315-SB
18	P-318-SB	S-318-SB
21	P-321-SB	S-321-SB
24	P-324-SB	S-324-SB
27	P-327-SB	S-327-SB
30	P-330-SB	S-330-SB
33	P-333-SB	S-333-SB

NOTE: Not available in contact sizes 2-12.

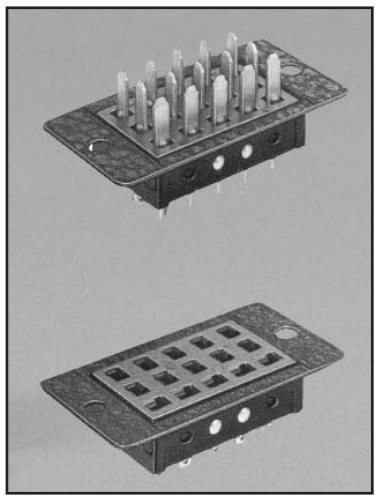

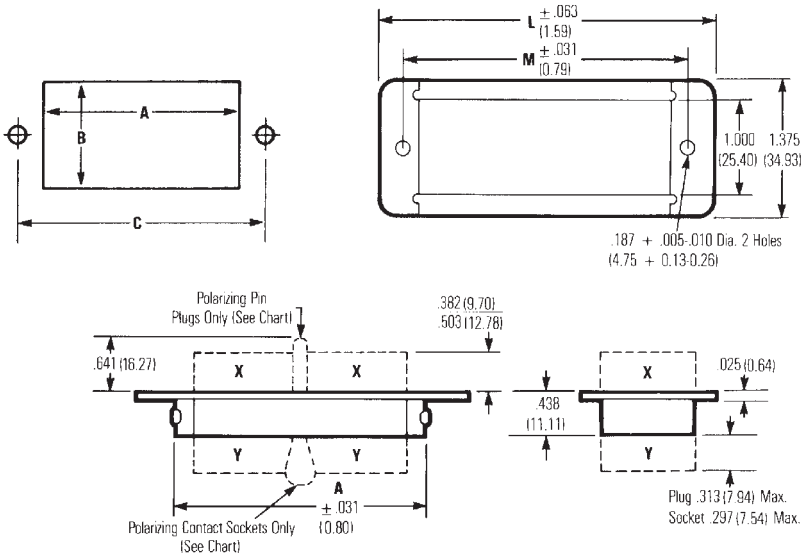

X = length of plug contacts. This dimension does not apply to sockets.
Y = length of plug or socket tails.

Dimensions

No. of Polarizing Contacts	A ±.031 (.79mm) in	A mm	M ±.031 (.79mm) in	M mm	L ±.063 (1.59mm) in	L mm	Polarizing Pin
15	1.688	42.86	2.125	53.98	2.547	64.69	NO
18	2.000	50.80	2.438	61.93	2.859	72.62	NO
21	2.313	58.75	2.750	69.85	3.172	80.57	NO
24	2.625	66.68	2.063	52.40	3.484	88.49	14
27	2.938	74.63	3.375	85.73	3.797	96.44	14
30	3.250	82.55	3.688	93.68	4.109	104.38	14
33	3.563	90.50	4.000	101.60	4.422	112.32	17

Panel Cutout Dimensions

Reference	A in	A mm	B in	B mm	C in	C mm
315-SB	1.750	44.45	1.156	29.36	2.125	53.98
318-SB	2.063	52.40	1.156	29.36	2.438	61.93
321-SB	2.375	60.33	1.156	29.36	2.750	69.85
324-SB	2.688	68.28	1.156	29.36	3.062	77.77
327-SB	3.000	76.20	1.156	29.36	3.376	85.75
330-SB	3.313	84.15	1.156	29.36	3.688	93.68
333-SB	3.625	92.08	1.156	29.36	4.000	101.60

Marketed exclusively through distribution.

2

300 Series Deep Bracket (DB)

No. of Contacts	Catalog No. Plug	Catalog No. Socket
2	P-302-DB	S-302-DB
3	P-303-DB	S-303-DB
4	P-304-DB	S-304-DB
6	P-306-DB	S-306-DB
8	N/A	N/A
10	N/A	N/A
12	P-312-DB	N/A
15	P-315-DB	S-315-DB
18	P-318-DB	S-318-DB
21	P-321-DB	S-321-DB
24	P-324-DB	S-324-DB
27	P-327-DB	S-327-DB
30	P-330-DB	S-330-DB
33	P-333-DB	S-333-DB

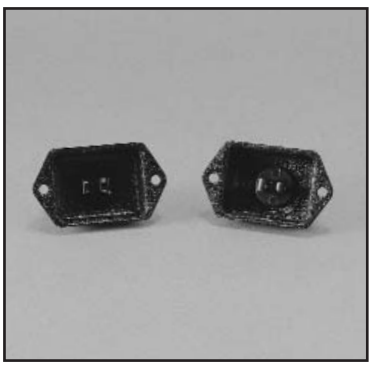

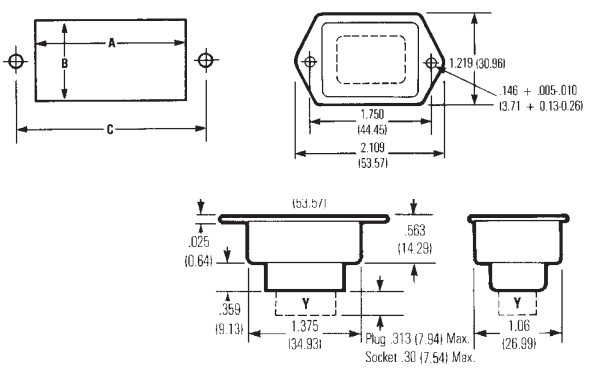

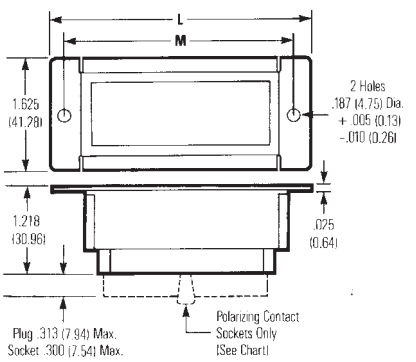

Dimensions

Y = length of plug or socket tails.

No. of Contacts	L ±.063 (1.60mm) in	L ±.063 (1.60mm) mm	M ±.031 (.79mm) in	M ±.031 (.79mm) mm	Polarizing Pin
15	2.813	71.44	2.375	60.33	NO
18	3.125	79.38	2.688	68.28	NO
21	3.437	87.31	3.000	76.20	NO
24	3.750	95.25	3.313	84.15	14
27	4.063	103.19	3.625	92.08	14
30	4.375	111.13	3.938	100.03	14
33	4.688	119.06	4.250	107.95	17

Panel Cutout Dimensions

Reference	A in	A mm	B in	B mm	C in	C mm
302-DB thru 312-DB	1.453	36.91	1.125	28.58	1.750	38.10
315-DB	2.000	50.80	1.438	36.53	2.376	60.35
318-DB	2.313	58.75	1.438	36.53	2.688	68.28
321-DB	2.625	66.68	1.438	36.53	3.000	76.20
324-DB	2.938	74.63	1.438	36.53	3.312	84.12
327-DB	3.250	82.55	1.438	36.53	3.626	92.10
330-DB	3.562	90.47	1.438	36.53	3.938	100.03
333-DB	3.875	98.43	1.438	36.53	4.250	107.95

Marketed exclusively through distribution.

300 Series with Hood and 90° Cable Clamp (CCE)

No. of Contacts	Catalog No. Plug	Catalog No. Socket
2	P-302-CCE	S-302-CCE
3	P-303-CCE	S-303-CCE
4	P-304-CCE	S-304-CCE
6	P-306-CCE	S-306-CCE
8	N/A	N/A
10	P-310-CCE	N/A
12	P-312-CCE	N/A
15	P-315-CCE	S-315-CCE
18	P-318-CCE	S-318-CCE
21	P-321-CCE	S-321-CCE
24	P-324-CCE	S-324-CCE
27	P-327-CCE	S-327-CCE
30	P-330-CCE	S-330-CCE
33	P-333-CCE	S-333-CCE

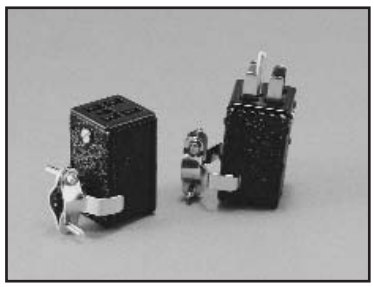

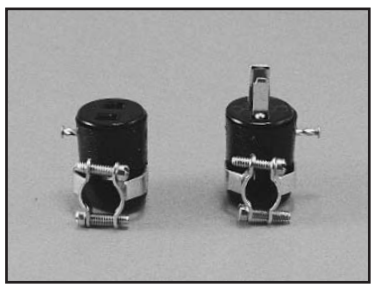

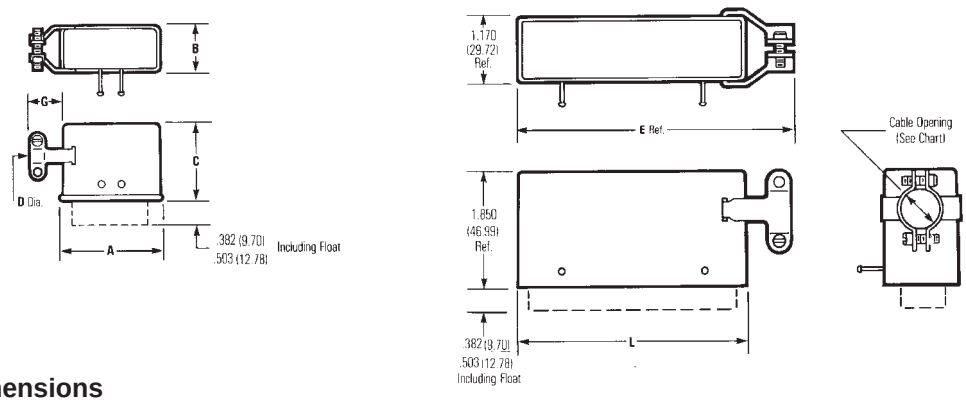

Dimensions

No. of Contacts	A ±.016 (.41mm) in	A ±.016 (.41mm) mm	B ±.016 (.41mm) in	B ±.016 (.41mm) mm	C ±.031 (.79mm) in	C ±.031 (.79mm) mm	G in	G mm	Cable "D" Opening in	Cable "D" Opening mm
2	.691	17.55	-	-	.953	24.21	.313	7.95	.313	7.95
3	1.034	26.26	.472	11.99	.953	24.21	.344	8.74	.250	6.35
4	.786	19.96	.724	18.39	.953	24.21	.453	11.51	.375	9.53
6	1.036	26.31	.724	18.39	.078	27.38	.469	11.91	.438	11.13
8	--	--	--	--	--	--	--	--	--	--
10	1.592	40.44	.720	18.29	1.203	30.56	.359	9.12	.500	12.70
12	1.286	32.66	.974	24.74	1.203	30.56	.422	10.72	.563	14.30

No. of Contacts	E in	E mm	L in	L mm	Cable Opening in	Cable Opening mm	Polarizing Pin
15	2.514	63.85	1.795	45.59	.563	14.30	NO
18	2.826	71.78	2.107	53.52	.563	14.30	NO
21	3.139	79.73	2.420	61.47	.625	15.88	NO
24	3.451	87.66	2.732	69.39	.625	15.88	14
27	3.764	95.61	3.045	77.34	.625	15.88	14
30	4.076	103.53	3.357	85.27	.750	19.05	14
33	4.389	111.48	3.670	93.22	.750	19.05	17

Marketed exclusively through distribution.

2

300 Series with Hood and 180° Cable Clamp (CCT)

No. of Contacts	Catalog No. Plug	Catalog No. Socket
2	P-302-CCT	S-302-CCT
3	P-303-CCT	S-303-CCT
4	P-304-CCT	S-304-CCT
6	P-306-CCT	S-306-CCT
8	N/A	N/A
10	P-310-CCT	N/A
12	P-312-CCT	N/A
15	P-315-CCT	S-315-CCT
18	P-318-CCT	S-318-CCT
21	P-321-CCT	S-321-CCT
24	P-324-CCT	S-324-CCT
27	P-327-CCT	S-327-CCT
30	P-330-CCT	S-330-CCT
33	P-333-CCT	S-333-CCT

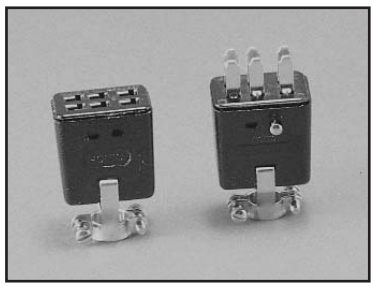

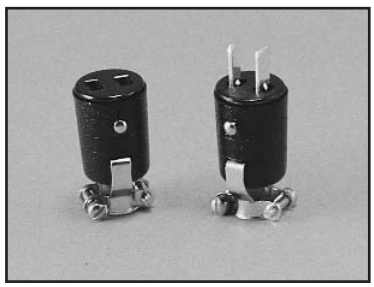

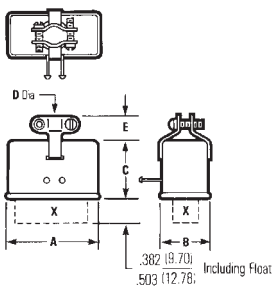

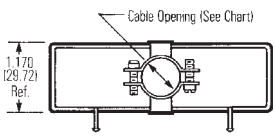

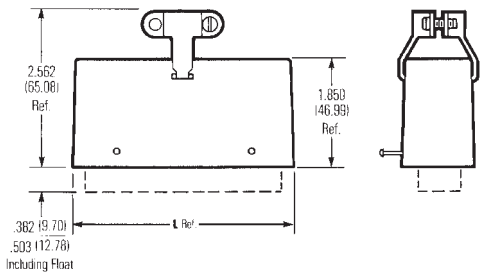

Dimensions

No. of Contacts	A ±.016 (.41mm) in	A ±.016 (.41mm) mm	B ±.016 (.41mm) in	B ±.016 (.41mm) mm	C ±.031 (.79mm) in	C ±.031 (.79mm) mm	"D" Cable Opening in	"D" Cable Opening mm	E ±.031 (.79mm) in	E ±.031 (.79mm) mm
2	.691	17.55	-	-	.953	24.21	.375	9.53	.359	9.12
3	1.034	26.26	.472	11.99	.953	24.21	.313	7.95	.359	9.12
4	.786	19.96	.724	18.39	.953	24.21	.375	9.53	.469	11.91
6	1.036	26.31	.724	18.39	1.078	27.38	.438	11.13	.484	12.29
8	--	--	--	--	--	--	--	--	--	--
10	1.592	40.44	.720	18.29	1.203	30.56	.500	12.70	.500	12.70
12	1.286	32.66	.974	24.74	1.203	30.56	.563	14.30	.469	11.91

No. of Contacts	L in	L mm	Cable Opening in	Cable Opening mm	Polarizing Pin
15	1.795	45.59	.563	14.30	NO
18	2.107	53.52	.563	14.30	NO
21	2.420	61.47	.625	15.88	NO
24	2.732	69.39	.625	15.88	14
27	3.045	77.34	.625	15.88	14
30	3.357	85.27	.750	19.05	14
33	3.670	93.22	.750	19.05	17

Marketed exclusively through distribution.

300 Series Plug with Hood and Lock (CCT-L) and Socket with Hood and Keeper (CCT-K)

No. of Contacts	Catalog No. Plug w/ Lock	Catalog No. Socket w/ Keeper
2	P-302-CCT-L	S-302-CCT-K
3	P-303-CCT-L	S-303-CCT-K
4	P-304-CCT-L	S-304-CCT-K
6	P-306-CCT-L	S-306-CCT-K
8	N/A	N/A
10	P-310-CCT-L	N/A
12	P-312-CCT-L	N/A
15	P-315-CCT-L	S-315-CCT-K
18	P-318-CCT-L	S-318-CCT-K
21	P-321-CCT-L	S-321-CCT-K
24	P-324-CCT-L	S-324-CCT-K
27	P-327-CCT-L	S-327-CCT-K
30	P-330-CCT-L	S-330-CCT-K
33	P-333-CCT-L	S-333-CCT-K

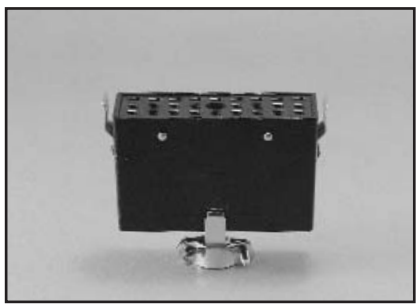

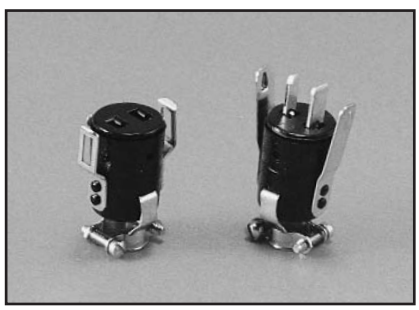

Socket

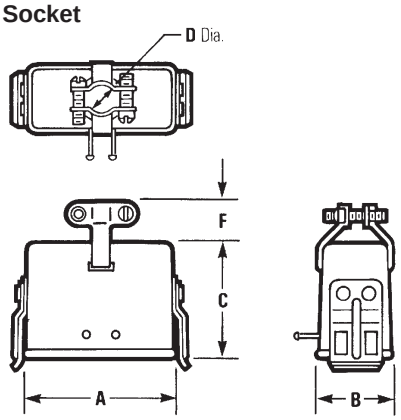

Plug

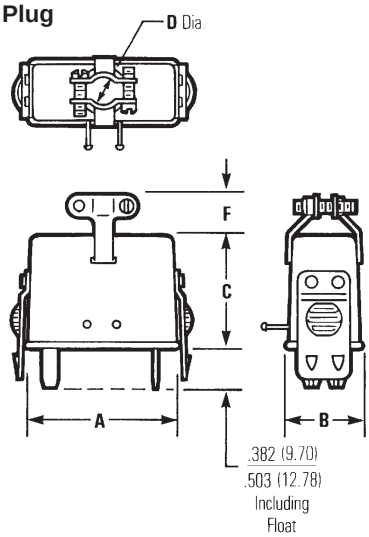

Dimensions

No. of Contacts	A ±.016 (.41mm) in	A ±.016 (.41mm) mm	B ±.016 (.41mm) in	B ±.016 (.41mm) mm	C ±.031 (.79mm) in	C ±.031 (.79mm) mm	F in	F mm	"D" Cable Opening in	"D" Cable Opening mm	Polarizing Pin
2	.691	17.5	-	-	.953	24.21	.359	9.12	.375	9.53	--
3	1.034	26.26	.472	11.99	.953	24.21	.359	9.12	.313	7.94	--
4	.786	19.96	.724	18.39	.953	24.21	.469	11.91	.375	9.53	--
6	1.036	26.31	.724	18.39	1.078	27.38	.484	12.29	.438	11.13	--
8	--	--	--	--	--	--	--	--	--	--	--
10	1.592	40.44	.720	18.29	1.203	30.56	.500	12.70	.500	12.70	--
12	1.286	32.66	.974	24.74	1.203	30.56	.469	11.91	.563	14.30	--
15	1.795	45.59	1.100	27.94	1.850	46.99	.712	18.08	.563	14.30	NO
18	2.107	53.52	1.100	27.94	1.850	46.99	.712	18.08	.563	14.30	NO
21	2.420	61.47	1.100	27.94	1.850	46.99	.712	18.08	.625	15.88	NO
24	2.732	69.39	1.100	27.94	1.850	46.99	.712	18.08	.625	15.88	14
27	3.045	77.34	1.100	27.94	1.850	46.99	.712	18.08	.625	15.88	14
30	3.357	85.27	1.100	27.94	1.850	46.99	.712	18.08	.750	19.05	14
33	3.670	93.22	1.100	27.94	1.850	46.99	.712	18.08	.750	19.05	17

Marketed exclusively through distribution.

2

JONES PLUGS AND SOCKETS 300 SERIES MATING CHART

PLUGS

SOCKETS: MOUNTING CONFIG.	AB	DB	FP	RP	EB	SB	CCE	CCT	CCT-L	CCT-K	LAB
AB	•*		•*		•*	•*	•	•			•
DB								•			•
FP	•*		•*		•*		•	•			•
RP							•	•			•
EB	•*		•*		•*		•	•			•
SB	•*				•*	•*	•	•			•
CCE	•		•	•	•	•	•	•			•
CCT	•	•	•	•	•	•	•	•			•
CCT-L										•	
CCT-K									•		
LAB	•	•	•	•	•	•	•	•	•	•	•

• These are recommended configurations.

•* These are possible configurations, but not normally recommended.

NOTE: Cinch layout S315-12 is available only in “AB” or “LAB”.

Replacement Drive Pins for Series 300 Plugs and Sockets with Cable Caps and Clamps

Dimensions **Ordering Information**

No. of Contacts	Dim. L +.005 (.13mm) in	mm	No. of Contacts	Catalog No.
2	.687	17.45	2	302R
3	.468	11.89	3	303R
4,6,8,10*	.718	18.24	4,6,8,10*	304R
12	.953	28.58	12	312R
15-33*	1.125	28.58	15-33*	333R

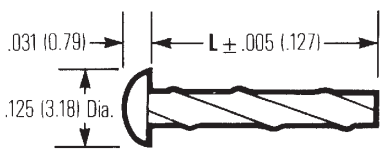

*10 contact size and 15 through 33 contact sizes require two pins per unit; all other sizes require only one.

Marketed exclusively through distribution.

Jones Plugs/Sockets Series 2400

Multiple Density
Solder Eyelet

Cinch

Features

- *For use in cable-to-cable and cable-to-panel applications.*
- *Designed for medium duty.*
- *Plug prongs are .250" (6.35mm) wide and .055" (1.40mm) thick.*
- *Socket contacts have solder eyelet contacts of .093" diameters.*
- *Polarized to prevent wrong-way insertion.*
- *Plugs have projecting flat blades, sockets have recessed twin bellows.*
- *Cable clamps of zinc and clear irridite-plated steel are used for strain relief.*
- *Bifurcated bellows socket contact provides four individual flexing surfaces for maximum contact with the blade.*
- *Plugs and sockets have recessed pockets with barriers around the contacts.*
- *A shoulder extends around the face (mating) side of both plug and socket presenting a finished appearance when mounted in bracket or cap.*
- *Intermates with existing 400 Series Products on the market.*
- *UL Recognized - file - E17021B (UL1977) E130965 (1863).*
- *CSA - LR31996-2.*
- *Panel cutout dimensions (See page 2-57).*

Materials

Insulation Material: Molded monoblock, general purpose phenolic, black
Contact Material: Plug: Brass
Socket: Phosphor bronze
Contact Plating: Cadmium
Operating Temperature: Up to +105°C
Hood Material: Formed metal with dielectric liner in hood to prevent shorting

Electrical

Operating Voltage:	250 VAC RMS
Current Rating:	15 Amps
Current Resistance:	1.0 Milliohms maximum

POLARIZING PATTERNS FOR SERIES 2400

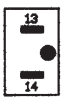

2402

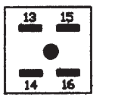

2404

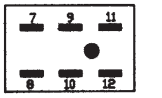

2406

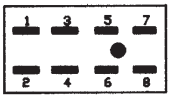

2408

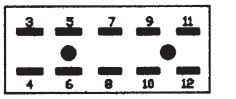

2410

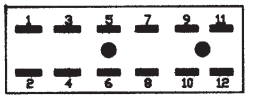

2412

Marketed exclusively through distribution.

2400 Series Less Angle Bracket

No. of Contacts	Catalog No. Plug	Catalog No. Socket
2	N/A	S-2402-LAB
4	P-2404-LAB	S-2404-LAB
6	P-2406-LAB	S-2406-LAB
8	P-2408-LAB	S-2408-LAB
10	P-2410-LAB	S-2410-LAB
12	P-2412-LAB	S-2412-LAB

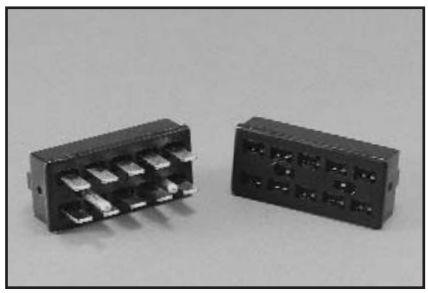

Plug

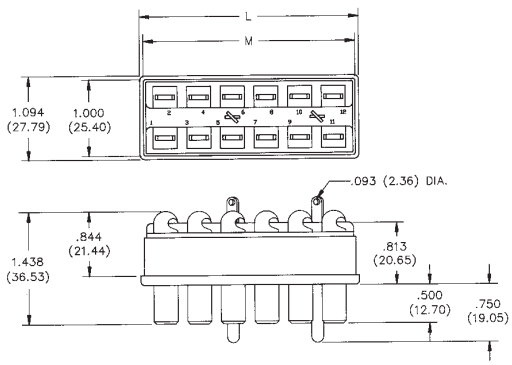

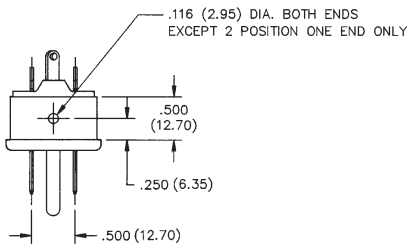

Socket

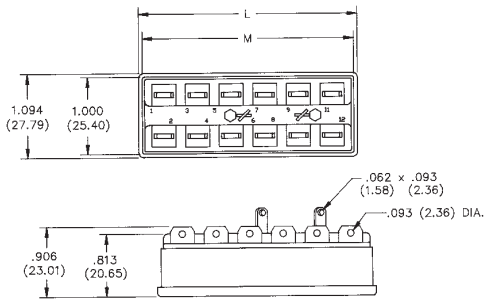

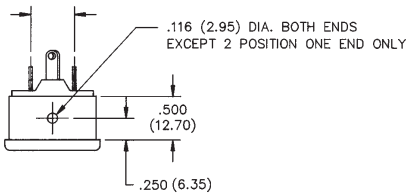

Dimensions - Plug or Socket

No. of Contacts	M in	M mm	L in	L mm
2	.563	14.29	.656	16.67
4	1.000	25.40	1.094	27.78
6	1.438	36.51	1.531	38.89
8	1.875	47.63	1.969	50.01
10	2.313	58.74	2.406	61.12
12	2.750	69.85	1.844	46.83

Marketed exclusively through distribution.

2400 Series with Angle Bracket

No. of Contacts	Catalog No. Plug	Catalog No. Socket
2	N/A	S-2402-AB
4	P-2404-AB	S-2404-AB
6	P-2406-AB	S-2406-AB
8	P-2408-AB	S-2408-AB
10	P-2410-AB	S-2410-AB
12	P-2412-AB	S-2412-AB

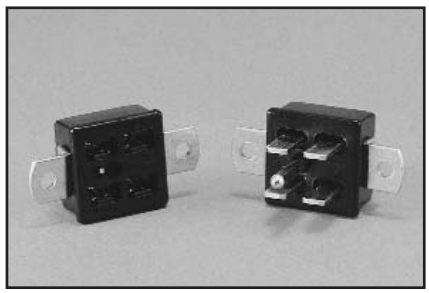

Plug

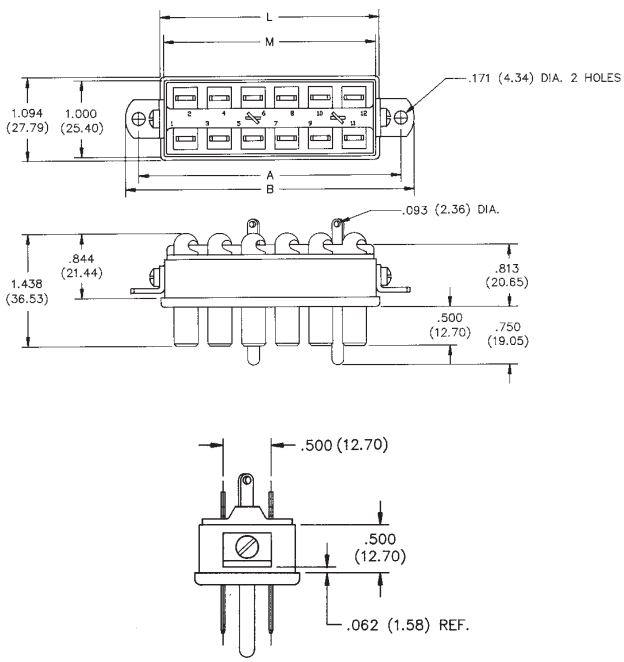

Socket

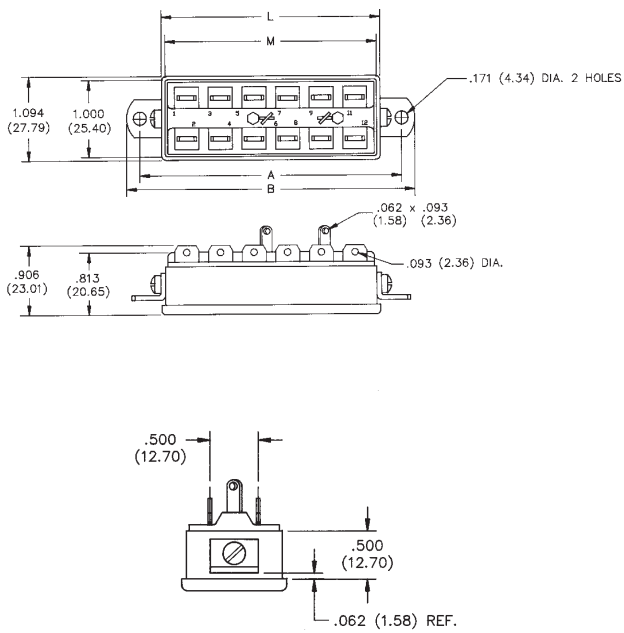

Dimensions - Plug or Socket

No. of Contacts	M in	M mm	L in	L mm
2	.563	14.29	.656	16.67
4	1.000	25.40	1.094	27.78
6	1.438	36.51	1.531	38.89
8	1.875	47.63	1.969	50.01
10	2.313	58.74	2.406	61.12
12	2.750	69.85	2.844	72.24

Panel Cutout dimensions are on page 2-61.

Marketed exclusively through distribution.

2400 Series with Shallow Bracket

No. of Contacts	Catalog No. Plug	Catalog No. Socket
2	N/A	S-2402-SB
4	P-2404-SB	S-2404-SB
6	P-2406-SB	S-2406-SB
8	P-2408-SB	S-2408-SB
10	P-2410-SB	S-2410-SB
12	P-2412-SB	S-2412-SB

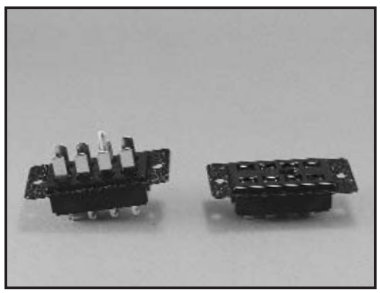

Plug

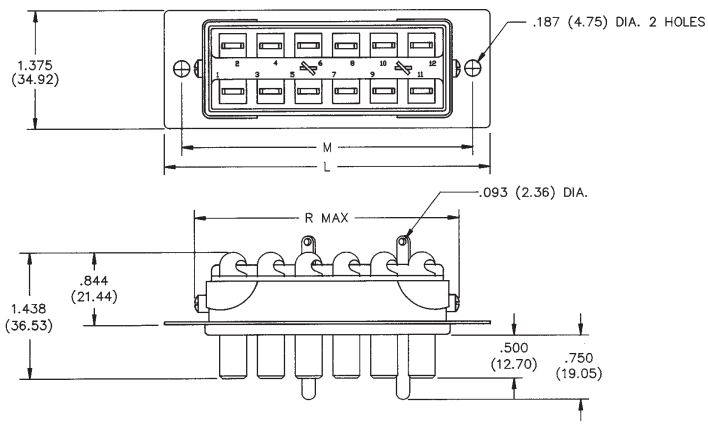

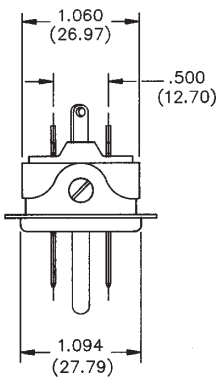

Socket

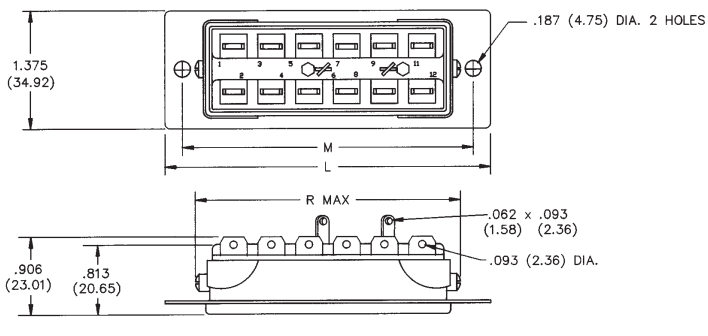

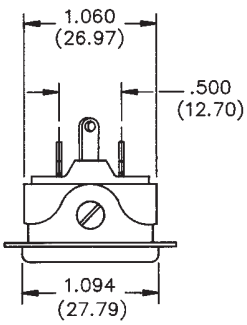

Dimensions - Plug or Socket

No. of	L		M		R. Max.	
Contacts	in	mm	in	mm	in	mm
2	1.500	38.10	1.062	26.99	1.766	19.45
4	1.937	49.21	1.500	38.10	1.234	31.34
6	2.375	60.33	1.938	49.23	1.672	42.47
8	2.813	71.45	2.375	60.33	2.109	53.57
10	3.250	82.55	2.813	71.45	2.547	64.69
12	3.688	93.68	3.250	82.55	2.984	75.80

Panel Cutout dimensions are on page 2-61.

Marketed exclusively through distribution.

2

2400 Series with Deep Bracket

No. of Contacts	Catalog No. Plug	Catalog No. Socket
2	N/A	S-2402-DB
4	P-2404-DB	S-2404-DB
6	P-2406-DB	S-2406-DB
8	P-2408-DB	S-2408-DB
10	P-2410-DB	S-2410-DB
12	P-2412-DB	S-2412-DB

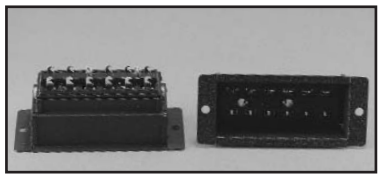

Plug

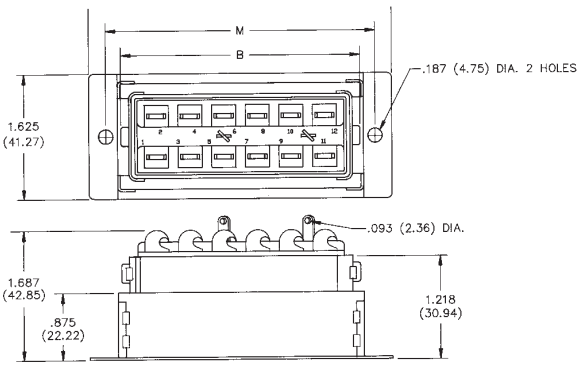

Socket

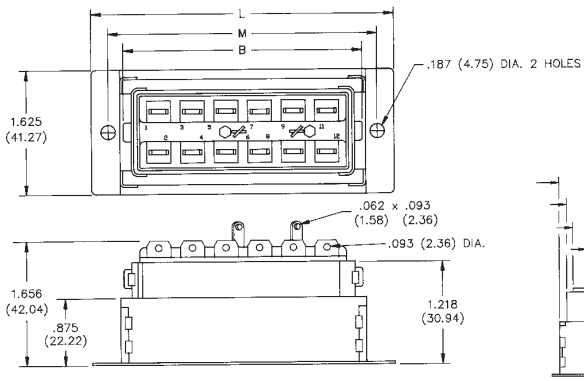

Plug or Socket

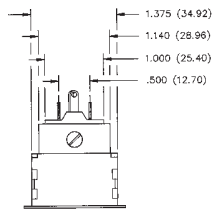

Dimensions - Plug or Socket

No. of	B		L		M	
Contacts	in	mm	in	mm	in	mm
2	.922	23.42	1.750	44.45	1.313	33.35
4	1.359	34.53	2.188	55.58	1.750	44.45
6	1.797	45.64	2.625	57.53	2.188	55.58
8	2.234	56.74	3.063	77.79	2.625	66.68
10	2.672	67.87	3.500	88.90	3.063	77.80
12	3.109	78.97	3.938	100.03	3.500	88.90

Panel Cutout dimensions are on page 2-61.

Marketed exclusively through distribution.

2400 Series with Hood and 90° Clamp

No. of Contacts	Catalog No. Plug	Catalog No. Socket
2	N/A	S-2402-CCE
4	P-2404-CCE	S-2404-CCE
6	P-2406-CCE	S-2406-CCE
8	P-2408-CCE	S-2408-CCE
10	P-2410-CCE	S-2410-CCE
12	P-2412-CCE	S-2412-CCE

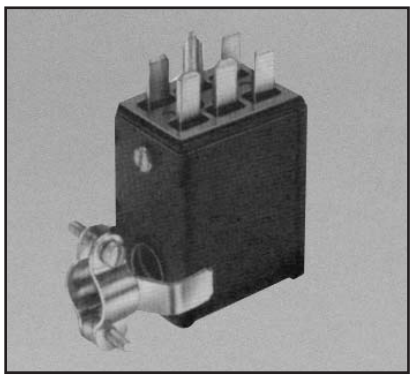

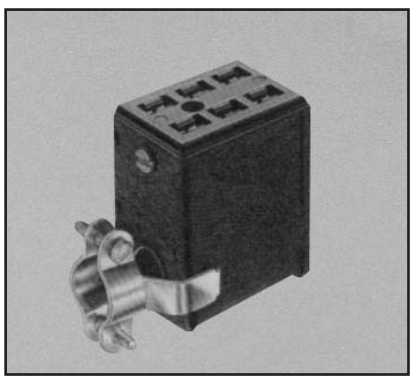

Plug

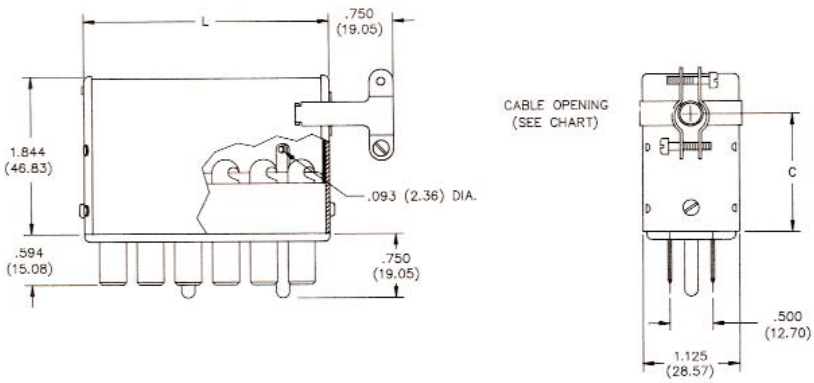

Socket

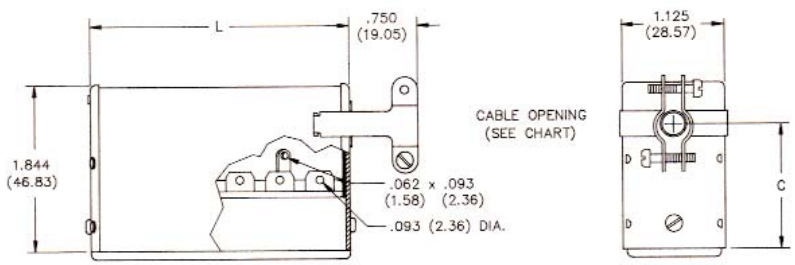

Dimensions - Plug or Socket

No. of Contacts	L in	L mm	C in	C mm	Cable Opening in	Cable Opening mm
2	.625	15.88	1.375	34.93	.375	9.53
4	1.062	26.99	1.375	34.93	.438	11.11
6	1.500	38.10	1.375	34.93	.438	11.11
8	1.937	49.21	1.344	34.13	.563	14.29
10	2.375	60.33	1.344	34.13	.563	14.29
12	2.813	71.45	1.312	33.34	.625	15.88

Marketed exclusively through distribution.

2

2400 Series with Hood and 180° Clamp

No. of Contacts	Catalog No. Plug	Catalog No. Socket
2	N/A	S-2402-CCT
4	P-2404-CCT	S-2404-CCT
6	P-2406-CCT	S-2406-CCT
8	P-2408-CCT	S-2408-CCT
10	P-2410-CCT	S-2410-CCT
12	P-2412-CCT	S-2412-CCT

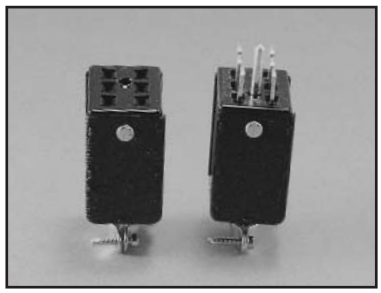

Plug

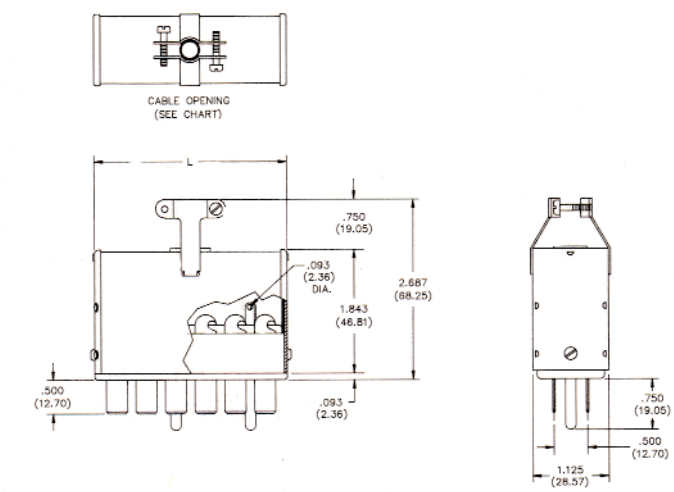

Socket

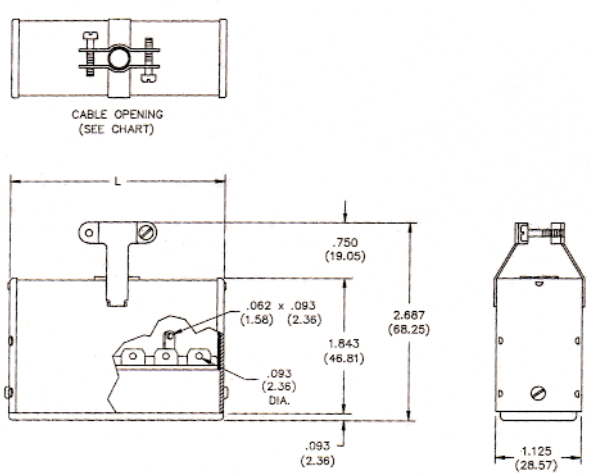

Dimensions - Plug or Socket

No. of Contacts	L in	L mm	Cable Opening in	Cable Opening mm
2	.625	15.88	.313	7.94
4	1.062	26.99	.438	11.11
6	1.500	38.10	.438	11.11
8	1.937	49.21	.563	14.29
10	2.375	60.33	.563	14.29
12	2.813	71.45	.625	15.88

Marketed exclusively through distribution.

Panel Cutout Dimensions
Angle Bracket

	A		B		C	
Reference	**in**	**mm**	**in**	**mm**	**in**	**mm**
P-2402-AB	--	--	--	--	--	--
S-2402-AB	1.188	30.16	1.008	25.60	1.015	25.78
P-2404-AB						
S-2404-AB	1.625	41.28	1.445	36.70	1.015	25.78
P-2406-AB						
S-2406-AB	2.063	52.40	1.886	47.83	1.015	25.78
P-2408-AB						
S-2408-AB	2.500	63.50	2.320	58.93	1.015	25.78
P-2410-AB						
S-2410-AB	2.938	74.63	2.758	70.05	1.015	25.78
P-2412-AB						
S-2412-AB	3.375	85.73	3.195	81.15	1.015	25.78

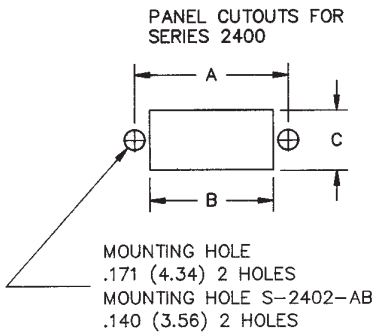

Panel Cutout Dimensions
Shallow Bracket

	A		B		C	
Reference	**in**	**mm**	**in**	**mm**	**in**	**mm**
P-2402-SB						
S-2402-SB	1.062	27.00	.813	20.64	1.156	29.37
P-2404-SB						
S-2404-SB	1.500	38.10	1.250	31.75	1.156	29.37
P-2406-SB						
S-2406-SB	1.938	49.22	1.688	42.86	1.156	29.37
P-2408-SB						
S-2408-SB	2.376	60.34	2.125	53.98	1.156	29.37
P-2410-SB						
S-2410-SB	2.812	71.44	2.563	65.10	1.156	29.37
P-2412-SB						
S-2412-SB	3.250	82.56	3.000	76.20	1.156	29.37

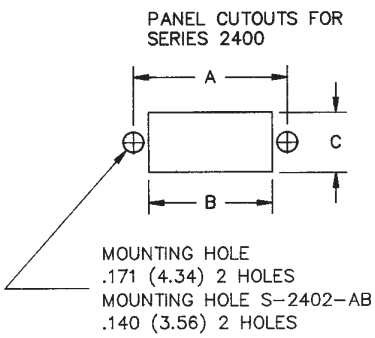

Panel Cutout Dimensions
Deep Bracket

	A		B		C	
Reference	**in**	**mm**	**in**	**mm**	**in**	**mm**
P-2402-DB						
S-2402-DB	1.312	33.34	.938	23.81	1.438	36.51
P-2404-DB						
S-2404-DB	1.750	44.46	1.375	34.93	1.438	36.51
P-2406-DB						
S-2406-DB	2.188	55.56	1.813	46.04	1.438	36.51
P-2408-DB						
S-2408-DB	2.624	66.68	2.250	57.15	1.438	36.51
P-2410-DB						
P-2410-DB	3.062	77.80	2.688	68.28	1.438	36.51
P-2412-DB						
S-2412-DB	3.500	88.90	3.125	79.38	1.438	36.51

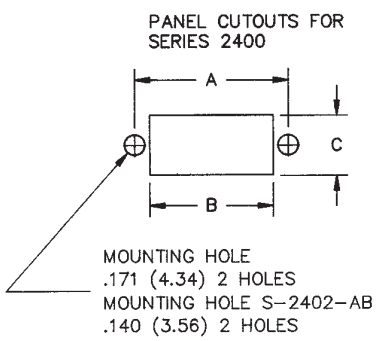

Marketed exclusively through distribution.

Circular Mini DIN Plugs

Single-Ended
Cable Assembly

Cinch

Features

- ***Contact positions 3, 4, 5, 6, 7, and 8.***
- ***Pre-assembled with standard shielded cable lengths; consult factory for other lengths.***
- ***Molded-in strain relief.***
- ***Cable and overmold available in standard colors: black or beige.***
- ***Contacts available with gold over nickel.***
- ***Shielding system designed to meet FCC requirements for EMI/RFI suppression.***
- ***UL Recognized - file E170218 (UL1977).***
- ***CSA Certified - file LR31996-6.***

Materials

Insulation Material: Plug Insulator: UL 94V-0 rated nylon
Plug Overmold: PVC (black or beige)
Cable Jacket: PVC (black or beige)
Contact Material: Plug: Phosphor bronze
Contact Plating:
Option 1: Gold Flash over nickel underplate overall
Option 2: Option 1 plus additional gold in mating area for total thickness of 30µin.
Shield Material: Steel
Shield Plating: Nickel
Standard Cable Composition: Shielded cable with 0.197 inch OD jacket over 28 AWG stranded wire conductors. Contact factory for custom cable requirements.

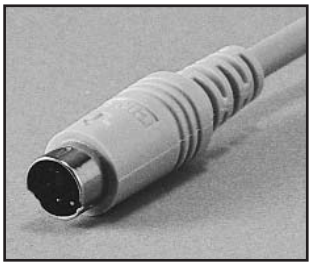

Environmental

Shock: MIL-STD-202, Method 213, Condition C
Operating Temperature: -40°C to +70°C
Heat Resistance: 196 hrs. at 100°C
Salt Spray: MIL-STD-202, Method 101D, Condition D
Vibration: MIL-STD-202, Method 204, Condition B
Humidity: MIL-STD-202, Method 103, 48 hrs. at 90-95% RH at 40°C

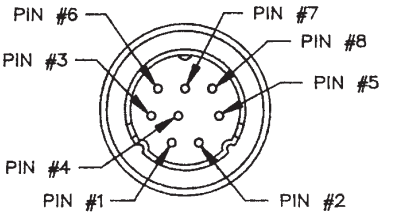

Electrical

Voltage Rating: 500 VAC RMS, 707 VDC
Current Rating: 1 Amp at 100 VAC
2 Amps at 12 VDC
Contact Resistance: Contact to contact: 30 milliohms maximum
Shield to shield: 50 milliohms maximum
Insulation Resistance: 500 megohms minimum at 500 VDC
100 megohms minimum after humidity

PIN NO	COLOR
1	BLACK
2	GREEN
3	RED
4	BROWN
5	BLUE
6	WHITE
7	YELLOW
8	GRAY

Mechanical

Durability: Withstands 500 mating/unmating cycles
Mating Force: 10 lb. (4.5 kg) maximum
Unmating Force: 1 lb. (0.9 kg) minimum
Contact Retention: 3 lb. minimum

Marketed exclusively through distribution.

Dimensions

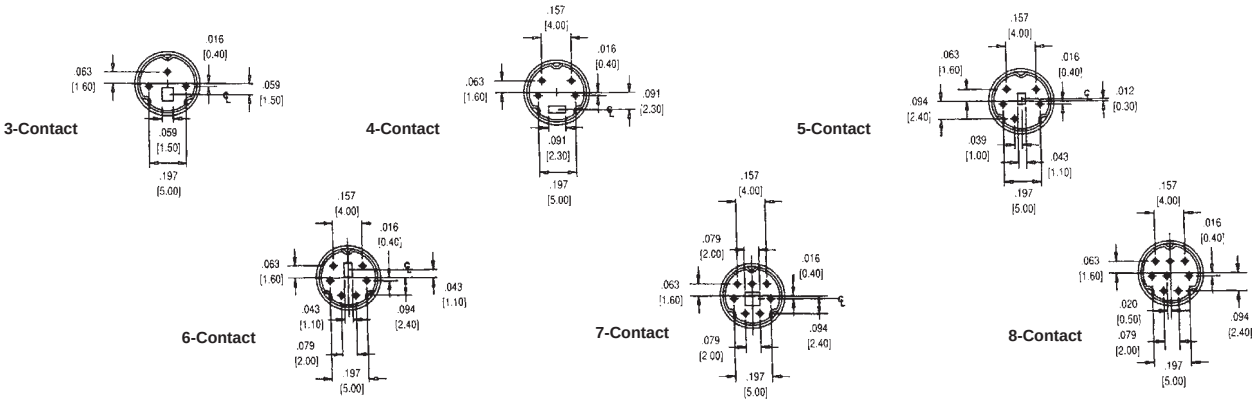

Ordering Information: (NOTE: One meter = 39.62 inches.)
For cable assemblies with plug on one end. Plug features contacts with Option 1 plating (gold flash over nickel).

No. of Contacts	Cable Length Meter	Black Color Cable & Overmold Catalog No.	Beige Color Cable & Overmold Catalog No.
3	1	MDC-3P05	MDC-3P08
4	1	MDC-4P05	MDC-4P08
4	2	MDC-4P13	MDC-4P53
4	3	MDC-4P15	MDC-4P55
5	1	MDC-5P05	MDC-5P08
6	1	MDC-6P05	MDC-6P08
6	2	MDC-6P13	MDC-6P53
6	3	MDC-6P15	MDC-6P55
7	1	MDC-7P05	MDC-7P08
7	2	MDC-7P13	MDC-7P53
7	3	MDC-7P15	MDC-7P55
8	1	MDC-8P05	MDC-8P08
8	2	MDC-8P13	MDC-8P53
8	3	MDC-8P15	MDC-8P55

The above cable assemblies are highly recommended for general commercial applications. Contact factory for other lengths or colors.

For cable assemblies with plug on one end. Plug features contacts with Option 2 plating (Option 1 with additional gold in mating area). NOTE: Total gold thickness in mating area is 30 microinches.

No. of Contacts	Cable Length Meter	Black Color Cable & Overmold Catalog No.	Beige Color Cable & Overmold Catalog No.
3	1	MDC-3P06	MDC-3P09
4	1	MDC-4P06	MDC-4P09
5	1	MDC-5P06	MDC-5P09
6	1	MDC-6P06	MDC-6P09
7	1	MDC-7P06	MDC-7P09
8	1	MDC-8P06	MDC-8P09

The above cable assemblies are recommended where greater contact durability is required.

Additional Capabilities

- Additional lengths or colors of the above cable assemblies can be produced. Consult factory for custom orders.
- Custom-plated contacts can be provided. Consult factory for information.

Marketed exclusively through distribution.

Features

- ***Individual components available for cable assembly with overmolding.***
- ***Plug insulator available with contact positions 3, 4, 5, 6, 7, and 8.***
- ***Seamless shield case is crimped to cable shield; designed to meet FCC requirements for EMI/RFI suppression.***
- ***One-piece shield case - no extra ferrules or shields required with Cinch Shield Crimp Tools.***
- ***Contacts are crimp style and supplied on reels.***
- ***Contacts available with gold over nickel in several options.***
- ***Tools available to facilitate reliable, efficient termination.***
- ***Terminates 24 to 30 AWG wire.***
- ***UL Recognized - file E170218 (UL1977).***

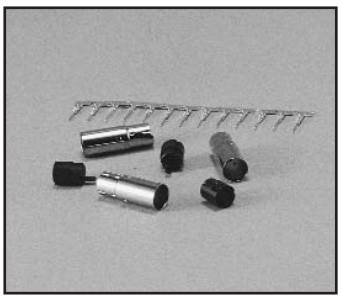

Materials

Insulation Material: Plug Insulator: 94 V-0 rated nylon

Contact Material: Plug: Phosphor bronze

Contact Plating:

Option 1: Gold flash over nickel underplate overall

Option 2: Option 1 plus additional gold in mating area for total thickness of 30µin.

Option 3: Option 1 plus additional gold in mating area for total thickness of 50µin.

Shield Case Material: Steel

Shield Case Plating: Nickel

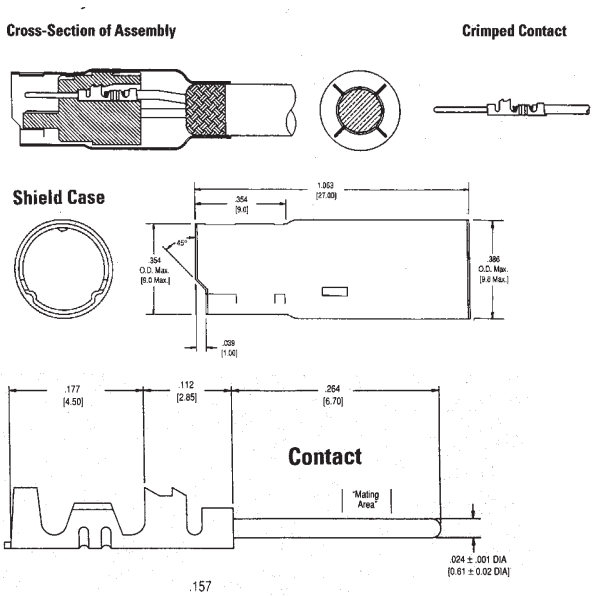

Dimensions

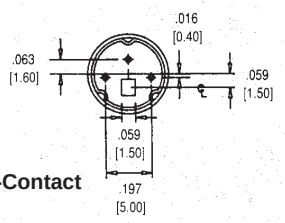

3-Contact

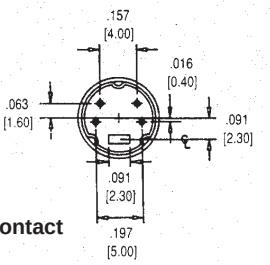

4-Contact

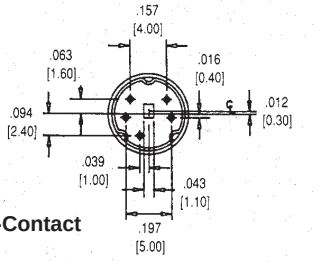

5-Contact

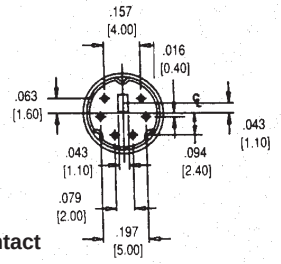

6-Contact

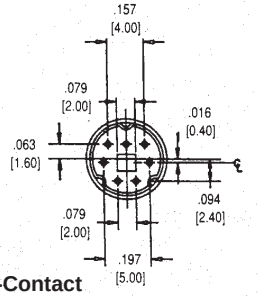

7-Contact

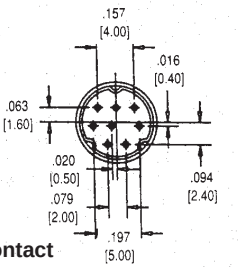

8-Contact

Marketed exclusively through distribution.

Ordering Information

For each Plug Assembly, the following components are needed: one plug insulator, one shield, and adequate contacts.

Component Type	Description	Quantity	Catalog No.
Insulator	3 Position Insulator	1	MDX-3PI
	4 Position Insulator	1	MDX-4PI
	5 Position Insulator	1	MDX-5PI
	6 Position Insulator	1	MDX-6PI
	7 Position Insulator	1	MDX-7PI
	8 Position Insulator	1	MDX-8PI
Shield Case	Metal Shield Case	1	MDX-PZ
Contact	Option 1 Plating	300 on Reel	MDX-P-3A
	Option 1 Plating	15,000 on Reel	MDX-P-15A
	Option 2 Plating	300 on Reel	MDX-P-3B
	Option 2 Plating	15,000 on Reel	MDX-P-15B
	Option 3 Plating	15,000 on Reel	MDX-P-15D

Tool Ordering Information

The following tools are recommended for Mini Din Cable Plug Assembly.
One tool of each type is required.

Tool Type	Description	Catalog No.
Contact Crimp	Stripper-Crimper Machine Complete, Includes Dies	MDT-P25
	Contact Crimp Hand Tool Crimps using 300 Contact Reels	MDT-P35
Contact Insertion	Combination Contact Insertion and Insulator Insertion Tool	MDT-P41
	Contact Insertion Hand Tool	MDT-P28
	Fixture used with MDT-P28	MDT-P29
	Insulator Insertion Bench Mounted Tool	MDT-P34
	Insulator Insertion Hand Tool	MDT-P30
	Pneumatic Crimp Tool	MDT-P81

Overview of Assembly Steps

- Prepare multi-conductor cable.
- Crimp contacts onto individual conductors using tool MDT-P25 or tool MDT-P35.
- Insert contact with conductor into insulator using tool MDT-P41 or have insertion tool MDT-P28 with insulator locating vice MDT-P29.
- Insert insulator into the shield case using tool MDT-P34 or MDT-P30.
- Crimp the shield case onto the cable shield using tool MDT-P81.
- Overmold plastic to complete the assembly.

Marketed exclusively through distribution.

CARDCON™ Edge Connector Commercial

.100" (2.54mm) Density Dip Solder

Cinch

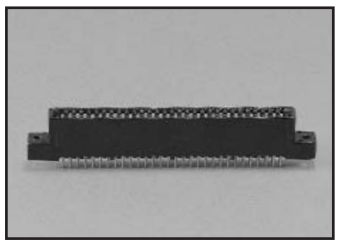

Features

- ***AT and XT versions available.***
- ***Dip solder tails on .200" (5.08mm) row centers double readout.***
- ***Bifurcated semi-bellows contacts for added contact reliability.***
- ***Ideal for applications involving vibration or board irregularities.***
- ***Contact positions: 12, 15, 18, 20, 22, 25, 28, 30, 31, 36, 37, 40, 43, 44, 49, 50, 52, 60, 70, AT, and XT.***
- ***Accepts .062" (1.59mm) thick PC boards.***
- ***Available less mounting ears, or with .128" (3.25mm) mounting holes or 4-40 threaded holes.***
- ***Meets applicable performance criteria of MIL-C-21097.***
- ***Tube packaging available.***
- ***UL Recognized - file E170218 (UL1977) E130965 (UL1863).***

Materials

Insulation Material: UL 94V-0 rated glass-filled polyester, black

Contact Material: Spring brass

Standard Contact Plating: 10µin. selective gold over nickel, 50µin. nickel in contact area, tin on tails

XT, AT Plating: 30µin. selective gold over 50µin. nickel in contact area, tin on tails

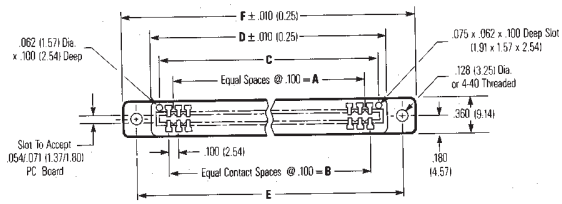

Environmental

Shock: Per MIL-STD-202E, Method 213, Condition C
Operating Temperature: -65°C to +105°C
Vibration: Per MIL-STD-202E, Method 204, Condition B
Humidity: Per MIL-STD-202, Method 103, Condition B
Accessories:
Polarizing Key: Two types (order separately):
a) for between-contact polarization and
b) for in-contact polarization.
See page 2-74 for more information.
Card Guide Posts: (order separately)
Attach to mounting ears and guide PC board into connector. See page 2-74 for more information.

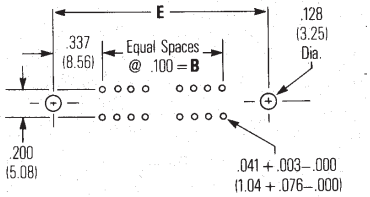

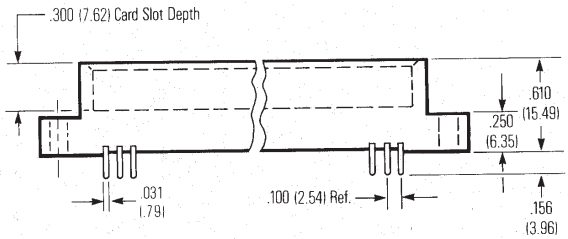

Electrical

Withstanding Voltage:	650 VAC RMS (@ sea level)
Current Rating:	3 Amps
Contact Resistance:	10 Milliohms maximum
Insulation Resistance:	5000 Megohms minimum

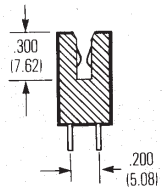

Mechanical

Individual Contact Insertion and Separation Force:

12oz. maximum with .070" (1.78mm) blade;
1 oz. minimum with .054" (1.37mm) blade

Marketed exclusively through distribution.

Dimensions

No. of	A		B		C		D		E		F	
Pos./Cont.	in	mm	in	mm	in	mm	in	mm	in	mm	in	mm
12/24	1.000	25.40	1.100	27.94	1.300	33.02	1.460	37.08	1.775	45.09	2.035	51.69
15/30	1.300	33.02	1.400	35.56	1.600	40.64	1.760	44.70	2.075	52.71	2.335	59.31
18/36	1.600	40.64	1.700	43.18	1.900	48.26	2.060	52.32	2.375	60.33	2.635	66.93
18/36+ 31/62IBM	5.000	127.00	5.100	129.54	5.300	134.62	5.460	138.68	5.775	146.69	6.035	153.29
20/40	1.800	45.72	1.900	48.26	2.100	53.34	2.260	57.40	2.575	65.41	2.835	72.01
22/24	2.000	50.80	2.100	53.34	2.300	58.42	2.460	62.48	2.775	70.49	3.035	77.09
25/50	2.300	58.42	2.400	60.96	2.600	66.04	2.760	70.10	3.075	78.11	3.335	84.71
28/56	2.600	66.04	2.700	68.58	2.900	73.66	3.060	77.72	3.375	85.73	3.635	92.33
30/60	2.800	71.12	2.900	73.66	3.100	78.74	3.260	82.80	3.575	90.81	3.835	97.41
31/62	2.900	73.66	3.000	76.20	3.200	81.28	3.360	85.34	3.675	93.35	3.935	99.95
31/62IBM	2.900	73.66	3.000	76.20	3.200	81.28	3.360	85.34	3.675	93.35	3.935	99.95
36/72	3.400	86.36	3.500	88.90	3.700	93.98	3.860	98.04	4.175	106.05	4.435	112.63
37/74	3.500	88.90	3.600	91.44	3.800	96.52	3.960	100.58	4.275	108.59	4.535	115.19
40/80	3.800	96.52	3.900	99.06	4.100	104.14	4.260	108.20	4.575	116.21	4.835	122.81
43/86	4.100	104.14	4.200	106.68	4.400	111.76	4.560	115.82	4.875	123.83	5.135	130.43
44/88	4.200	106.68	4.300	109.22	4.500	114.30	4.660	118.36	4.975	126.37	5.235	132.97
49/98	4.700	119.38	4.800	121.92	5.000	127.00	5.160	131.06	5.475	139.07	5.735	145.67
50/100	4.800	121.92	4.900	124.46	5.100	129.54	5.260	133.60	5.575	141.61	5.835	148.21
52/104	5.000	127.00	5.100	129.54	5.300	134.62	5.460	138.68	5.775	146.69	6.035	153.29
60/120	5.800	147.32	5.900	149.86	6.100	154.94	6.260	159.00	6.575	167.01	6.835	173.61
70/140	6.800	172.72	6.900	175.26	7.100	180.34	7.260	184.40	7.575	192.41	7.835	199.01

Ordering Information

No. of Pos./Cont.	Less Mounting Ears Catalog No.	.128" (3.25mm) Mounting Holes Catalog No.	4-40 Threaded Holes Catalog No.
12/24	50-12SN-12	50-12SN-11	50-12SN-13
15/30	50-15SN-12	50-15SN-11	50-15SN-13
18/36	50-18SN-12	50-18SN-11	50-18SN-13
18/36+ 31/62 IBM	50-52SN-AT	-	-
20/40	50-20SN-12	50-20SN-11	50-20SN-13
22/44	50-22SN-12	50-22SN-11	50-22SN-13
25/50	50-25SN-12	50-25SN-11	50-25SN-13
28/56	50-28SN-12	50-28SN-11	50-28SN-13
30/60	50-30SN-12	50-30SN-11	50-30SN-13
31/62	50-31SN-12	50-31SN-11	50-31SN-13
31/62 IBM	50-31SN-XT	-	-
36/72	50-36SN-12	50-36SN-11	50-36SN-13
37/74	50-37SN-12	50-37SN-11	50-37SN-13
40/80	50-40SN-12	50-40SN-11	50-40SN-13
43/86	50-43SN-12	50-43SN-11	50-43SN-13
44/88	50-44SN-12	50-44SN-11	50-44SN-13
49/98	50-49SN-12	50-49SN-11	50-49SN-13
50/100	50-50SN-12	50-50SN-11	50-50SN-13
52/104	50-52SN-12	50-52SN-11	50-52SN-13
60/120	50-60SN-12	50-60SN-11	50-60SN-13
70/140	50-70SN-12	50-70SN-11	50-70SN-13

Marketed exclusively through distribution.

CARDCON™ Edge Connector Commercial

.156" (3.96mm) Density Dip Solder/Solder Eyelet

Cinch

Features

- ***Dip solder tails single readout and double readout on .140" (3.56mm) row centers or .200" (5.08mm) row centers.***
- ***Solder eyelet, single readout and double readout on .200" (5.08mm) row centers.***
- ***Available with unique tails for PC board retention; holds the connector firmly on the board during wave soldering operations.***
- ***Bifurcated semi-bellows contacts for added contact reliability.***
- ***Ideal for applications involving vibration or board irregularities.***
- ***Contact positions: 6, 10, 12, 15, 18, 22, 24, and 25.***
- ***Accepts single- or double-sided .062" (1.59mm) thick PC boards.***
- ***Available less mounting ears or with .128" (3.25mm) mounting hole.***
- ***Meets applicable performance criteria of MIL-C-21097.***
- ***UL Recognized - file E170218 (UL1977) E130965 (UL1863).***

Materials

Insulation Material: UL 94V-0 rated glass-filled polyester, black
Contact Material: Spring brass
Contact Plating: 10µ" selective gold over 30µ" nickel in contact area, tin on tails

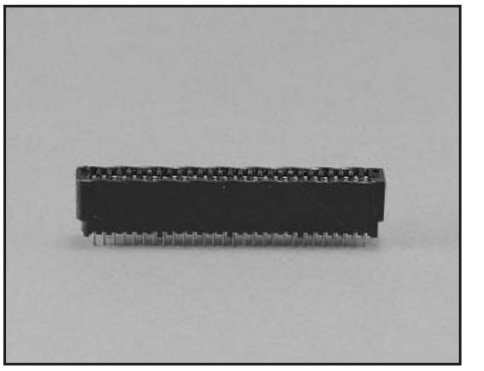

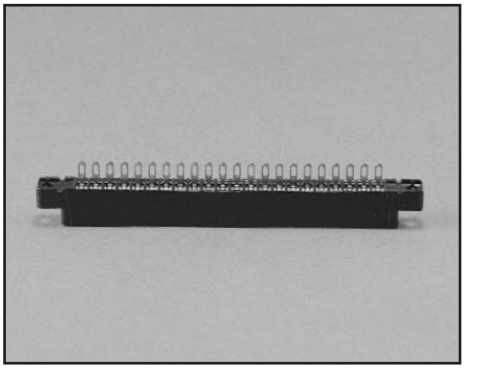

Environmental

Shock: Per MIL-STD-202E, Method 213, Condition C
Operating Temperature: -65°C to +105°C
Vibration: Per MIL-STD-202E, Method 204, Condition B
Humidity: Per MIL-STD-202, Method 103, Condition B
Accessories:
Polarizing Key: Two types (order separately):
a) for between-contact polarization and
b) for in-contact polarization
See page 2-72 for more information.
Card Guide Posts: (order separately):
Attach to mounting ears and guide PC board into connector
See page 2-72 for more information.

Electrical

Withstanding Voltage:	1800 VAC RMS (@ sea level)
Current Rating:	5 Amps
Contact Resistance:	6 Milliohms maximum
Insulation Resistance:	5000 Megohms minimum

Mechanical

Individual Contact Insertion and Separation Force:
16 oz. maximum with .070" (1.78mm) blade;
1 oz. minimum with .054" (1.37mm) blade

Marketed exclusively through distribution.

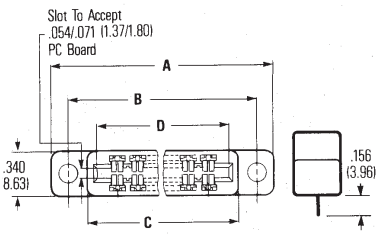

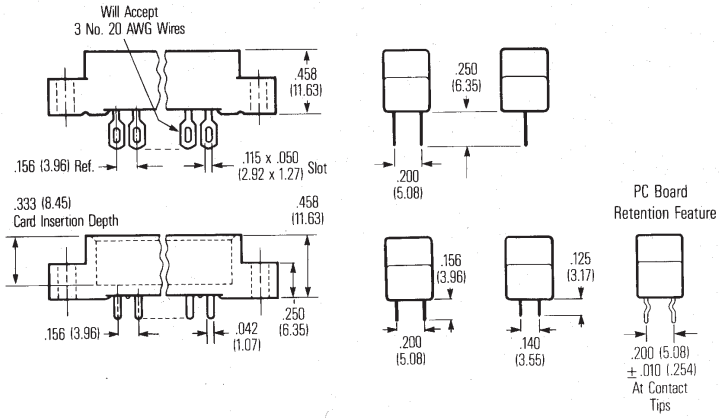

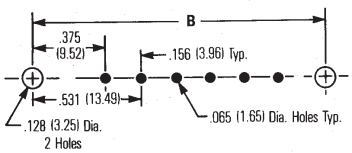

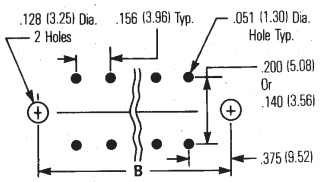

Dimensions

No. of	A		B		C		D	
Pos./Cont.	In	mm	in	mm	in	mm	in	mm
6/12	1.785	45.34	1.531	38.89	1.239	31.47	1.100	27.94
10/20	2.410	61.21	2.156	54.76	1.874	47.34	1.724	43.79
12/24	2.723	69.16	2.469	62.71	2.177	55.30	2.036	51.71
15/30	3.191	81.05	2.937	74.60	2.645	67.18	2.504	63.60
18/36	3.660	92.96	3.406	86.51	3.114	79.10	2.972	75.49
22/44	4.285	108.84	4.031	102.39	3.739	94.94	3.596	91.34
24/48	4.598	116.79	4.344	110.34	4.052	102.92	3.911	99.34
25/50	4.754	120.75	4.500	114.30	4.208	106.88	4.067	103.30

Ordering Information

No. of Pos./Cont.	Less Mounting Ears Catalog No.	.128 Mounting Hole Catalog No.
Solder eyelet, single readout		
6/6	50-6SN-8	50-6SN-7
10/10	50-10SN-8	50-10SN-7
12/12	50-12SN-8	50-12SN-7
15/15	50-15SN-8	50-15SN-7
18/18	50-18SN-8	50-18SN-7
22/22	50-22SN-8	50-22SN-7
24/24	50-24SN-8	50-24SN-7
25/25	50-25SN-8	50-25SN-7

No. of Pos./Cont.	Less Mounting Ears Catalog No.	.128 Mounting Hole Catalog No.
Dip solder tails, single readout, .156" (3.96mm) long		
6/6	50-6SN-6	50-6SN-5
10/10	50-10SN-6	50-10SN-5
12/12	50-12SN-6	50-12SN-5
15/15	50-15SN-6	50-15SN-5
18/18	50-18SN-6	50-18SN-5
22/22	50-22SN-6	50-22SN-5
24/24	50-24SN-6	20-24SN-5
25/25	50-25SN-6	50-25SN-5

No. of Pos./Cont.	Less Mounting Ears Catalog No.	.128 Mounting Hole Catalog No.
Dip solder tails, double readout, .140" (3.55mm) row spacing, .125" (3.18mm) long		
6/12	50-12SN-4	50-12SN-2
10/20	50-20SN-4	50-20SN-2
12/24	50-24SN-4	50-24SN-2
15/30	50-30SN-4	50-30SN-2
18/36	50-36SN-4	50-36SN-2
22/24	50-44SN-4	50-44SN-2
24/48	50-48SN-4	50-48SN-2
25/50	50-50SN-4	50-50SN-2

Solder eyelet, double readout, .200" (5.08mm) row spacing		
6/12	50-12SN-10	50-12SN-9
10/20	50-20SN-10	50-20SN-9
12/24	50-24SN-10	50-24SN-9
15/30	50-30SN-10	50-30SN-9
18/36	50-36SN-10	50-36SN-9
22/24	50-44SN-10	50-44SN-9
24/28	50-48SN-10	50-48SN-9
25/50	50-50SN-10	50-50SN-9

Dip solder tails, double readout, .200" (5.08mm) row spacing, .156" (3.96mm) long		
6/12	50-12SN-3	50-12SN-1
10/20	50-20SN-3	50-20SN-1
12/24	50-24SN-3	50-24SN-1
15/30	50-30SN-3	50-30SN-1
18/36	50-36SN-3	50-36SN-1
22/44	50-44SN-3	50-44SN-1
24/48	50-48SN-3	50-48SN-1
25/50	50-50SN-3	50-50SN-1

Dip solder tails with unique board retention feature .200" (5.08mm) row spacing, .156" (3.96mm) long		
6/12	50-12SN-3R	50-12SN-1R
10/20	50-20SN-3R	50-20SN-1R
12/24	50-24SN-3R	50-24SN-1R
15/30	50-30SN-3R	50-30SN-1R
18/36	50-36SN-3R	50-36SN-1R
22/44	50-44SN-3R	50-44SN-1R
24/48	50-48SN-3R	50-48SN-1R
25/50	50-50SN-3R	50-50SN-1R

Marketed exclusively through distribution.

Edge Connector High Reliability

.156" (3.96mm) Density Dip Solder/Solder Eyelet

Cinch

Features

- ***Dip solder tails, single readout, .156" (3.96mm) long or .234" (5.94mm) long.***
- ***Dip solder tails, double readout, .156" (3.96mm) or .234" (5.94mm) long on .200" (5.08mm) row spacing, or .125" (3.18mm) long on .140" (3.56mm) row spacing.***
- ***Solder eyelet, single readout and double readout on .200" (5.08mm) row spacing.***
- ***Patented bifurcated bellows contacts for added contact reliability.***
- ***Ideal for applications involving vibration or board irregularities.***
- ***Contact positions: 6, 10, 12, 15, 18, 22, and 25.***
- ***Available with or without mounting ears.***
- ***Accepts single- or double-sided .062" (1.59mm) thick PC boards.***
- ***UL Recognized - file E170218 (UL1977) E130965 (UL1863).***

Materials

Insulation Material: Diallyl phthalate, green
Contact Material: Phosphor bronze
Contact Plating: 30µ" selective gold over 50µ" copper in the contact areas, 5µ" gold on tails

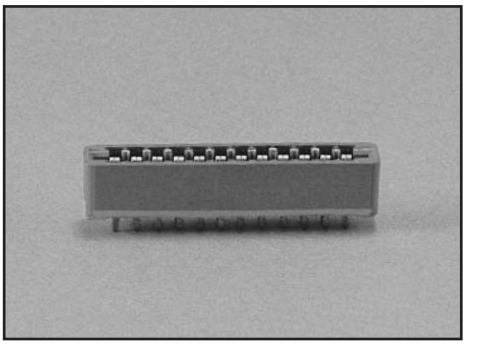

Environmental

Shock: Per MIL-STD-202E, Method 202
Operating Temperature: Dip solder: -65°C to +105°C
Solder eyelet: -65°C to +125°C
Vibration: Per MIL-STD-202E, Method 204, Condition B
Humidity: Per MIL-STD-202E, Method 103, Condition B
Accessories:
Polarizing Key: Two types (order separately):
a) for between-contact polarization and
b) for in-contact polarization
See page 2-74 for more information.
Card Guide Posts: (order separately):
Attach to mounting ears and guide PC board into connector
See page 2-74 for more information.

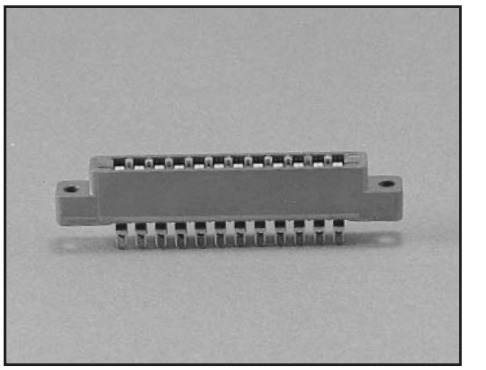

Electrical

Withstanding Voltage:	1800 VAC RMS (@ sea level)
Current Rating:	5 Amps
Contact Resistance:	Dip solder: 6 Milliohms Solder eyelet: 10 Milliohms
Insulation Resistance:	5000 Megohms minimum

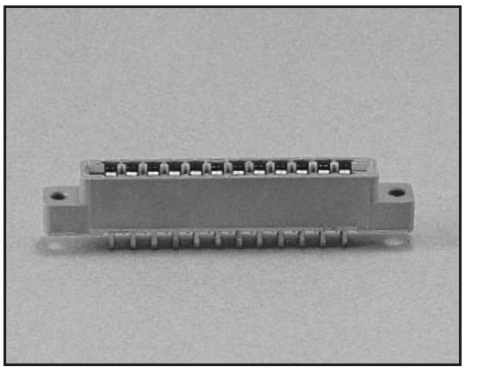

Mechanical

Individual Contact Insertion and Separation Force:
16 oz. maximum with .070" (1.78mm) blade;
1 oz. minimum with .054" (1.37mm) blade

Marketed exclusively through distribution.

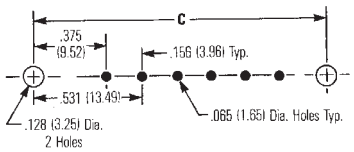

Single Readout

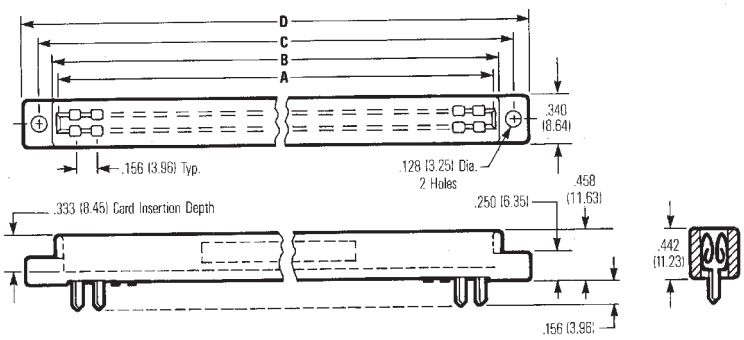

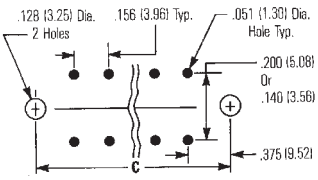

Double Readout

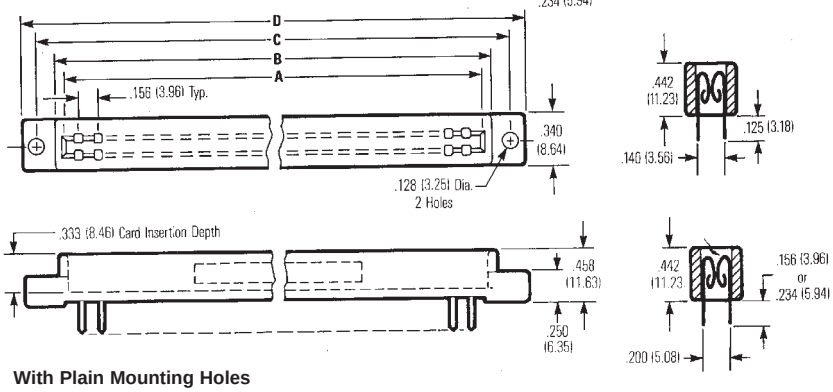

With Plain Mounting Holes

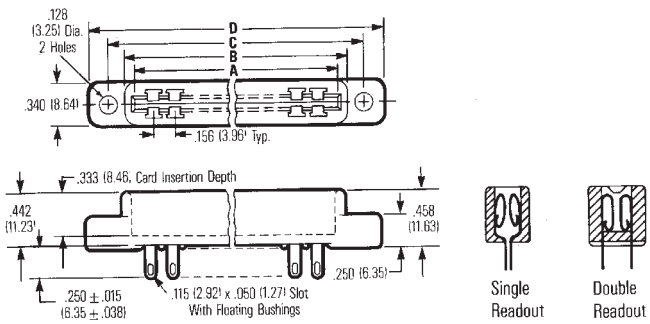

Dimensions

No. of	A		B		C		D	
Pos./Cont.	in	mm	in	mm	in	mm	in	mm
6	1.100	27.94	1.239	31.47	1.531	38.80	1.785	45.34
10	1.724	43.79	1.864	47.35	2.156	54.76	2.410	61.21
12	2.036	51.71	2.177	55.30	2.469	62.71	2.723	69.16
15	2.504	63.60	2.645	67.18	2.937	74.60	3.191	81.05
18	2.972	75.49	3.114	79.10	3.406	86.51	3.660	92.96
20	3.286	83.46	3.427	87.05	3.719	94.46	3.973	100.91
22	3.596	91.34	3.739	94.97	4.031	102.39	4.285	108.84
25	4.067	103.30	4.208	106.88	4.500	114.30	4.754	120.75

Marketed exclusively through distribution.

2

Ordering Information

Single Readout

No. of Pos./Cont.	.128" (3.25mm) Mounting Hole Dip Solder Tails .156" (3.96mm) Long Catalog No.	Dip Solder Tails .234" (5.94mm) Long Catalog No.	Solder Eyelet Catalog No.
6/6	50-6H-10	50-6S-10	50-6H-20
10/10	50-10H-10	50-10S-10	50-10H-20
12/12	50-12R-10	50-12S-10	50-12H-20
15/15	50-15H-10	50-15S-10	50-15H-20
18/18	50-18H-10	50-18S-10	50-18H-20
20/20	50-20C-10	50-20S-10	50-20A-20
22/22	50-22H-10	50-22S-10	50-22H-20
25/25	50-25H-10	50-25S-10	50-25H-20

Double Readout

No. of Pos./Cont.	.128" (3.25mm) Mounting Hole Solder Eyelet Catalog No.	Dip Solder Tails .234" (5.94mm) Long .200" (5.08mm) Between Row Spacing Catalog No.	Dip Solder Tails .156" (3.96mm) Long .200" (5.08mm) Between Row Spacing Catalog No.	Dip Solder Tails .125" (3.18mm) Long .140" (3.56mm) Between Row Spacing Catalog No.	Less Mounting Ears Dip Solder Tails .125" (3.18mm) Long .140" (3.56mm) Between Row Spacing Catalog No.
6/12	50-12H-30	50-12S-20	50-12H-10	50-12H-30-2	50-12H-30-1
10/20	50-20H-30	50-20S-20	50-20H-10	50-20H-30-2	50-20H-30-1
12/24	50-24H-30	50-24S-20	50-24H-10	50-24H-30-2	50-24H-30-1
15/30	50-30H-30	50-30S-20	50-30H-10	50-30H-30-2	50-30H-30-1
18/36	50-36H-30	50-36S-20	50-36H-10	50-36H-30-2	50-36H-30-1
20/40	50-40A-30	50-40S-20	50-40B-10		
22/44	50-44H-30	50-44S-20	50-44H-10	50-44H-30-2	50-44H-30-1
25/50	50-50H-30	50-50S-20	50-50H-10	50-50H-30-2	50-50H-30-1

Edge Connector High Reliability

.156" (3.96mm) Density Card Extender

Cinch

Features

- ***Solder terminations, double readout.***
- ***Bifurcated bellows type contacts.***
- ***Contact positions: 6, 10, 12, 15, 18, 22, and 25.***
- ***Accepts .062" (1.59mm) thick double-sided PC boards.***

Materials

Insulation Material: Diallyl phthalate, green
Contact Material: Beryllium copper
Contact Plating: 30µin. select gold over 50µin. nickel in the contact areas, 10µin. gold tails

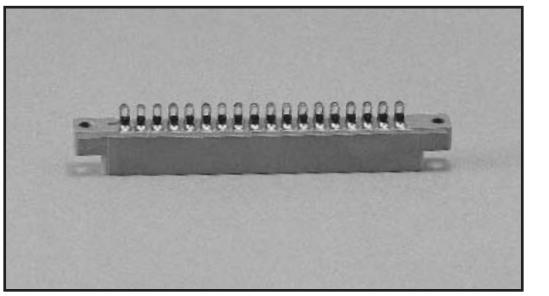

Environmental

Shock: Per MIL-STD-202E, Method 213, Condition C
Operating Temperature: -65°C to +125°C
Vibration: Per MIL-STD-202E, Method 204, Condition B
Humidity: Per MIL-STD-202E, Method 103, Condition B

Electrical

Withstanding Voltage:	830 VAC RMS (@ sea level)
Current Rating:	5 Amps
Contact Resistance:	5 Milliohms maximum
Insulation Resistance:	5000 Megohms minimum

Mechanical

Individual Contact Insertion and Separation Force:
16 oz. maximum with .070" (1.78mm) blade;
1 oz. minimum with .054" (1.37mm) blade

Marketed exclusively through distribution.

Dimensions

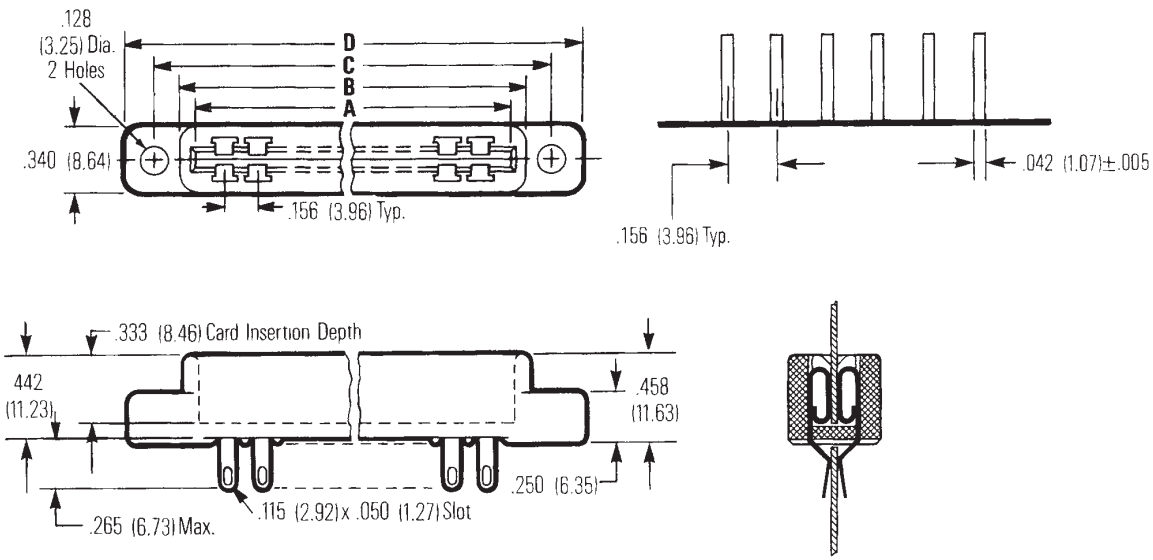

Dimensions

No. of	A		B		C		D	
Pos./Cont.	in	mm	in	mm	in	mm	in	mm
6/12	1.100	27.94	1.239	31.47	1.531	38.88	1.785	45.33
10/20	1.724	43.79	1.864	47.34	2.156	54.76	2.410	61.21
12/24	2.036	51.71	2.177	55.29	2.469	62.71	2.723	69.16
15/30	2.504	63.60	2.645	67.18	2.937	74.59	3.191	81.05
18/36	2.972	75.48	3.114	79.09	3.406	86.51	3.660	92.96
22/44	3.596	91.33	3.739	94.97	4.031	102.38	4.285	108.83
25/50	4.067	103.30	4.208	106.88	4.500	114.30	4.754	120.75

Ordering Information

No. of Pos./Cont.	Catalog No.
6/12	50-12S-30
10/20	50-20S-30
12/24	50-24S-30
15/30	50-30S-30
18/36	50-36S-30
22/44	50-44S-30
25/50	50-50S-30

Marketed exclusively through distribution.

Card Guides

Card guide for .100" (2.54mm) and .156" (3.96mm) density edge connectors. Accepts .062" (1.59mm) thick PC boards. Card guides attach to mounting ears and guide printed circuit board into connector. Order separately.

Material: Polypropylene
Part No. 50-GP-1 (Green)
Part No. 50-GP-1B (Black)

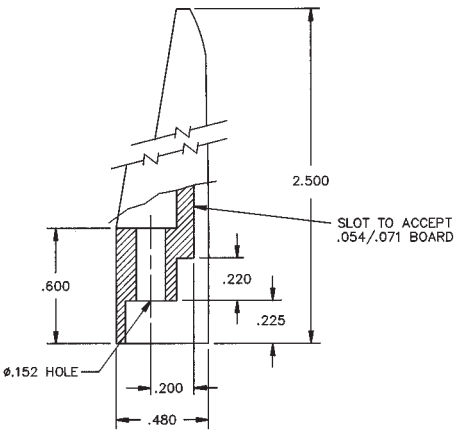

Polarizing Keys

Style A

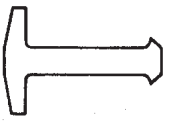

Style B

Style C

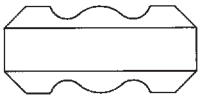

Style D

Description	Connector Family	Material	Style	Catalog No.
Between-contact type	.156"	Cellulose acetate	B	50-PK
In-contact type	.156"	Thermoset plastic	B	50-PK1
Between-contact type	.156"	Glass epoxy	A	50-PK2
Between-contact type	.156"	Glass epoxy	D	50-PK2M
Between-contact type	.100"	Glass-filled nylon	C	50-PK3
In-contact type	.156"	Thermoplastic	B	50-PK4

Marketed exclusively through distribution.

Plug Buttons

Nickel-plated steel. Spring tension prongs.
41V provides ventilation wherever required.

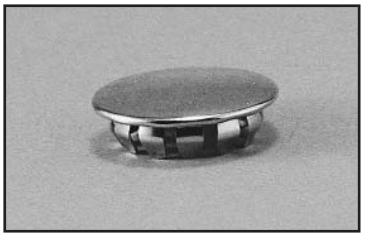

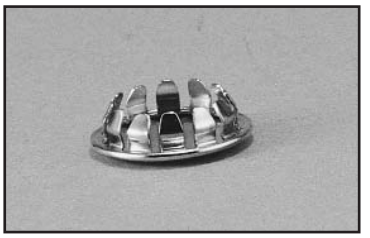

Dimensions

For Hole Diameter		Cup Diameter		
in	mm	in	mm	Catalog No.
.250	6.35	.406	10.32	41A
.375	9.53	.500	12.70	41B
.500	12.70	.656	16.67	41C
.625	15.88	.797	20.24	41D
.750	19.05	.938	23.81	41E
.875	22.23	1.062	26.99	41F
1.000	25.40	1.156	29.37	41G
1.250	31.75	1.438	36.51	41H
1.000	25.40	1.156	29.37	41V

Press-Fit BNC Coaxial Connector Board Mount Receptacle for 75 Ω Applications

Cinch

Features

- ***Solderless, Press-Fit Installation.***
- ***Strong, One-Piece Cast Body.***
- ***Standard BNC Interface.***
- ***75Ω Impedance.***
- ***Meets Lucent Technologies (AT&T) Requirements.***

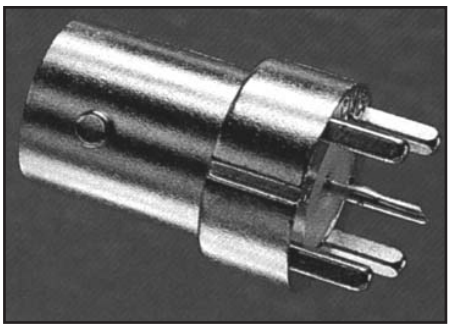

Compliant version, Pt. No. 299 99 00 134 is also available. For more information please contact us at 1-800-323-9612

Materials

Body: One-piece diecast zinc per QQ-Z-363
Plating: Nickel, 150µin. min. per QQ-N-290 over copper, 200µin. min. per MIL-C-14550
Center Contact: Beryllium copper
Plating: Gold, 30µin. minimum over nickel, 50µin. minimum
Insulator: Teflon TFE per ASTM D1710

Electrical

Impedance:	75Ω
Frequency Range:	0 to 4 GHz
RF Leakage:	> -55 dB
Insertion Loss:	.2dB maximum @ 2 GHz
VSWR:	1.024
Working Voltage:	≤ 500 VAC RMS @ sea level
Insulation Resistance:	≥ 5000 MOhms @ 500 VDC

Mechanical

Connector Insertion Force: ≤500 lb.*
Connector Removal Force: ≥100 lb.*
Center Contact Insertion Force: ≤ 2.0 lb.*
Center Contact Removal Force: ≥ 2.0 oz.*
*Requirements are for two connector insertions into the same PC board mounting holes. PC board thickness can range from .093" to .300" thick.
PC board hole requirements are as follows:
Ground Legs: .059" Nom.
Center Contact: .040" Nom.

Unique patented press-fit connector design allows for multiple insertions into a backplane without loss of mechanical retention or electrical performance.

The design requirements for nominal PC board mounting holes and thickness are as follows:

Insertion Forces:

.093 Board Thickness: 200 lb. max.
.250 Board Thickness: 500 lb. max.

Withdraw Forces:

.093 Board Thickness: 100 lb. max.
.250 Board Thickness: 200 lb. max.

The Cinch Press-Fit BNC surpasses these requirements with a unique, non-symmetrical ground leg design. This design allows the connector to be inserted, removed, rotated 180°, and reinserted into the same location on the board without loss of mechanical or electrical performance.

Production Insertion Tool Design

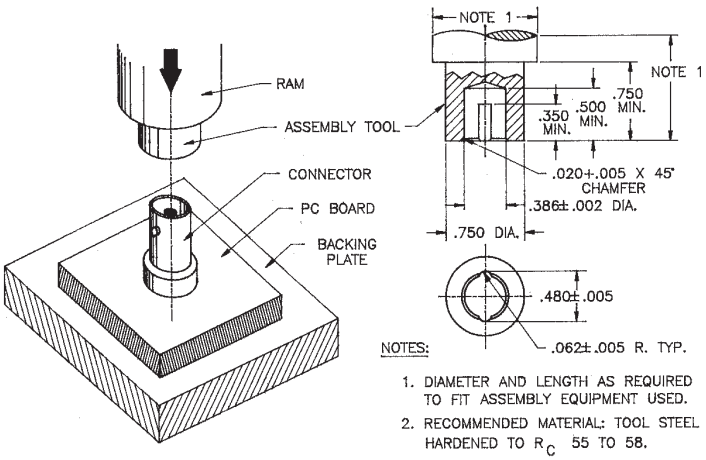

Press-Fit BNC Connector Dimensions

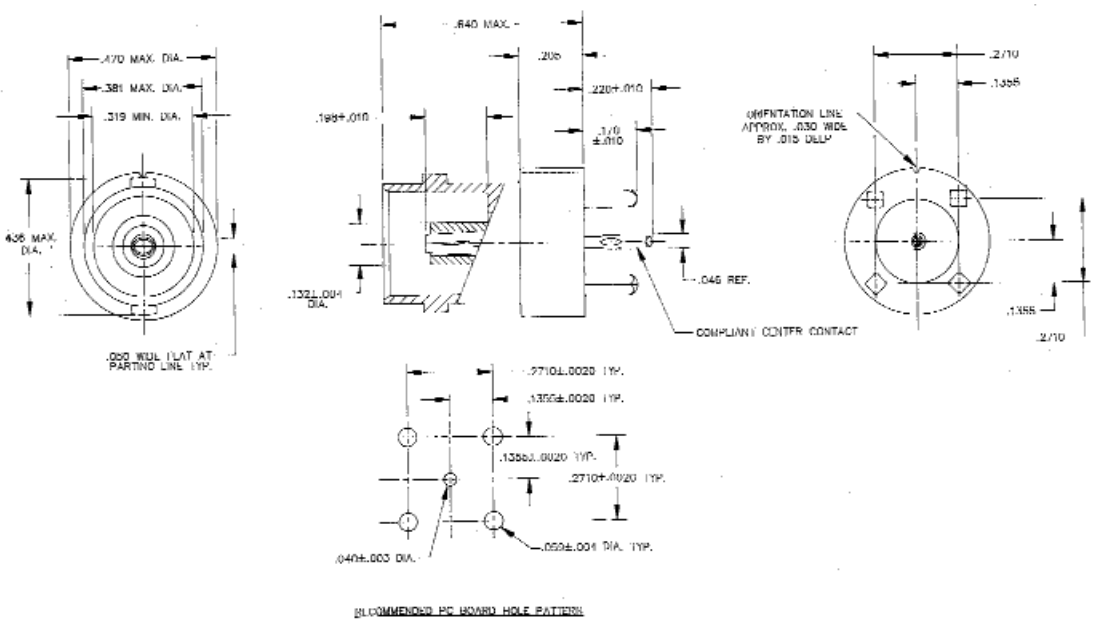

Ordering Information

Catalog Number:	BNC-1-PF
Standard Package:	Anti-Static Tube, 48 Connectors Per Tube

CYLINDRICAL

C48 Series/MIL-C-26500
Accessories & Application Tooling
Boeing: BACC45 / BACC63 Series

Cinch

Features

- ***Qualified to MIL-C-26500.***
- ***Styles qualified to Boeing BACC45 Series.***
- ***Styles qualified to Boeing BACC63 Series.***
- ***Power Contact Sizes: 20, 16, and 12.***
- ***Coax Contacts Available: Size 12 and 8.***
- ***Contacts: Crimp - Front release.***
- ***Optional Fixed Contacts: PC Termination.***
- ***Coupling Styles: Bayonet and Threaded.***
- ***Environmentally Sealed.***

Materials

Shell: Aluminum, stainless-steel options available

Finish: Aluminum - Anodize, optional electroless nickel / cadmium over nickel

Rubber: Silicone / fluorosilicone

Dielectric: Glass-filled epoxy

Environmental

Temperature Extremes: +200°C / 392°F to -55°C / -65°F

Ozone Resistance: 0.015% by volume

Temperature Life: Internal 238°C for 1,000 hours

Moisture Resistance: 1,000 megohms minimum / MIL-STD-202, Method 106

Thermal Shock: -55°C (-67°F) to 260°C (500°F)

Electrical

Dielectric Strength: 1,500 volts VAC RMS

Current Rating (Test):
Size 20 7.5 Amps D.C.
Size 16 13.0 Amps D.C.
Size 12 23.0 Amps D.C.

Insulation Resistance: 5,000 megohms minimum

Mechanical

Contact Retention: Size 20 - 20 lb. minimum
Size 16 - 25 lb. minimum
Size 12 - 30 lb. minimum

Durability: Threaded - 200 mating cycles
Bayonet - 500 mating cycles

Vibration: Std - 20 g's; 12 hours (Synasoidal)
MMB / Self-Lock - 39.6 g's RMS, 48 hours (Random)

Shock: 50 g's

GENERAL DESCRIPTION

The C48 Series describes a family of connectors qualified to MIL-C-26500. While maintaining the MIL-C-26500 mating interface, this product has also been expanded to include qualifications to numerous Boeing specifications to satisfy general purpose requirements and unique product challenges for shielding, environmental sealing, fluid resistance, and vibration.

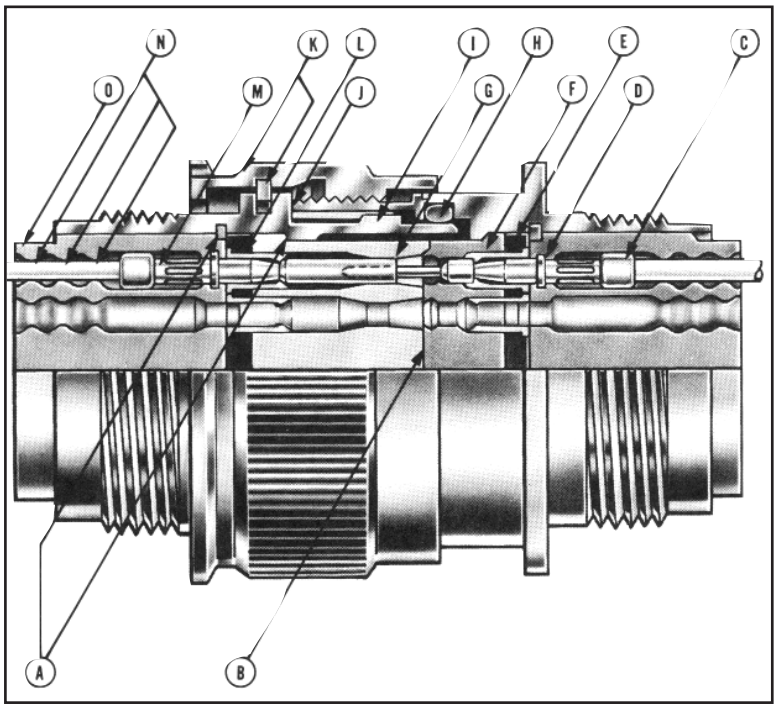

Design Features

A. Positive Location Captivated Insert (Mechanical Interlock)
B. Insert Face Seal
C. Pin Contact, MIL-C-39029/31
D. Contact Pressuring Seal
E. Anti-Deflection Disc
F. Resilient Pin Insert
G. Insert Rim Seal
H. Dynamic “O” Ring Shell Seal
I. Five-Key Shell Polarization
J. Metal-to-Metal Shoulder
K. Bayonet or Threaded Coupling, Permanent Captivation
L. Contact Retention Clip
M. Socket Contact, MIL-C-39029/32
N. Wire Sealing Risers
O. Grommet

The expanded Cinch C48 product family offers numerous product options qualified to Boeing high-performance requirements and product solutions developed for alternate termination styles/low-profile packaging.

Product Description	Cinch Series
• Threaded non-decoupling design	CN0966
• High-vibration bayonet plug with metal-to-metal bottoming shells	C0909 CN1020
• Connectors for shell grounding / shielding effectiveness, non-rotating accessory teeth, and advanced fluid-resistance elastometers	CN0966 CN0967 CN1020 CN1021
• Firewall Conformance	CN0966 CN0967
• Low-profile connectors - crimp - removable contacts	CN0915
• Low-profile connectors - fixed contacts / alternate termination styles	CN0942 CN0944

Cinch Numbers

C48-0 6 R 22-55 P 6-102

Series Designation
C48 --

Coupling Style
0 -- Threaded
1 -- Bayonet

Shell Style
0 -- Square Flange Receptacle
3 -- Single-Hole Mounting Receptacle
6 -- Straight Plug

Environmental Class
R -- Meets MIL-C-26500 (USAF)

Order Code (Deviations)
100 - Connector With Contacts & Cable Support
102 - Connector Less Cable Support With Contacts
105 - Connector Less Contacts With Cable Support
106 - Connector Less Contacts & Less Cable Support
See order codes for Boeing on page 3-14

Alternate Shell Positions
6, 7, 8, 9, 10 per table on page 3-4
(Omit for normal position)

Contact Style
P -- Pin
S -- Socket

Insert Arrangements
(See page 3-4)

Shell Size
8, 10, 12, 14, 16, 18, 20, 22, 24

3

Military Standard Part Numbers

You can use MS* as well as C48 Series part numbers when ordering C48 Series connectors.

*MS part numbers are supplied less cable support. If cable support is desired, it must be ordered separately.

MS24266 R 22 T 55 P 6

Military Designation
MS24264 -- Square-Flange Receptacle
MS24265 -- Single-Hole Mounting Receptacle
MS24266 -- Straight Plug

Environmental Class
R -- Meets MIL-C-26500 (USAF)

Shell Size
8, 10, 12, 14, 16, 18, 20, 22, or 24

Alternate Shell Positions
N, 6, 7, 8, 9, Y per table on page 3-4

Contact Style
P -- Pin
S -- Socket

Insert Arrangements
(See page 3-4)

Coupling Style
T -- Threaded
B -- Bayonet

Part numbers for the contacts and assembly tools are listed on page 3-12.

Inserts Available
(Showing Front Face of Socket Inserts)

Shell Size-8

2#20 contacts Insert 8-2 **(Y)**
3#20 contacts Insert 8-3 **(Y)**

Shell Size-10

2#20 contacts Insert 10-2 **(Y)**
2#16 contacts Insert 10-20
5#20 contacts Insert 10-5 **(Y)**

Shell Size-12

3#16 contacts Insert 12-3
12#20 contacts Insert 12-12 **(Y)**

Shell Size-14

2#16 contacts 1#2 shielded contact Insert 14-3
4#12 contacts Insert 14-4†
7#16 contacts Insert 14-7
9#20 contacts 3#16 contacts Insert 14-12 **(Y)**
15#20 contacts Insert 14-15 **(Y)**

Shell Size-16

10#16 contacts Insert 16-10
24#20 contacts Insert 16-24 **(Y)**

Shell Size-18

8#12 contacts Insert 18-8†
10#16 contacts 1#2 shielded contact Insert 18-11
14#16 contacts Insert 18-14
31#20 contacts Insert 18-31 **(Y)**

Shell Size-20

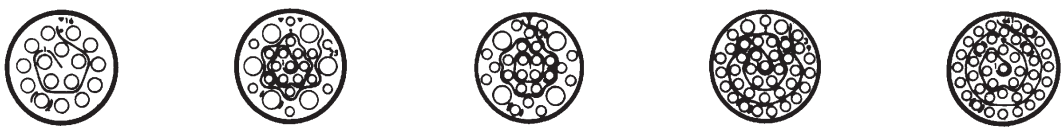

16#16 contacts Insert 20-16
19#20 contacts 6#12 contacts Insert 20-25† **(Y)**
24#20 contacts 4#12 contacts Insert 20-28† **(Y)**
37#20 contacts 2#16 contacts Insert 20-39 **(Y)**
41#20 contacts Insert 20-41 **(Y)**

Shell Size-22

12#12 contacts Insert 22-12†
19#16 contacts Insert 22-19
26#20 contacts 6#12 contacts Insert 22-32† **(Y)**
55#20 contacts Insert 22-55 **(Y)**

Shell Size-24

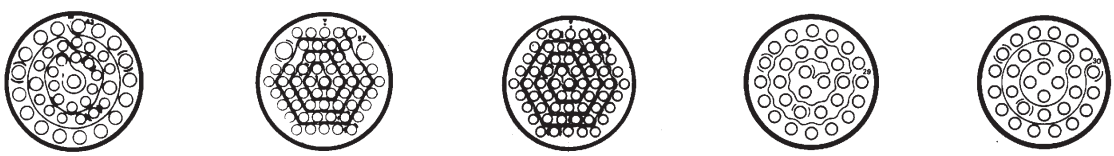

23#20 contacts 20#16 contacts Insert 24-43 **(Y)**
2#12 contacts 55#20 contacts Insert 24-57† **(Y)**
61#20 contacts Insert 24-61 **(Y)**
29 #16 contacts Insert 24-29
30 #16 contacts Insert 24-30

Shell Size-28

CN096X CN102X Series Only

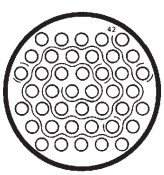

42 #16 contacts Insert 28-42

Alternate Shell Positions (Front face of receptacle shown)

NOTE: Alternate positions 6 through Y incorporate special shell polarizing key and keyways. All inserts remain in the normal position.

Positions	For Connector Size 8 and 10 A	B	C	D	For Connector Size 12, 14, 16, 18, 20, 22, 24, and 28 A	B	C	D
Normal (N)	105°	140°	215°	265°	105°	140°	215°	265°
6	102°	132°	248°	320°	18°	149°	192°	259°
7	80°	118°	230°	312°	92°	152°	222°	342°
8	35°	140°	205°	275°	84°	152°	204°	334°
9	64°	155°	234°	304°	24°	135°	199°	240°
10 or Y*	25°	115°	220°	270°	98°	152°	268°	338°

*Not available in Size 8 Connector. See individual part number systems.

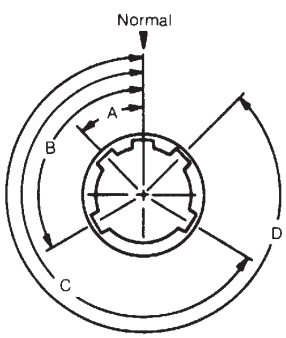

† = #1 shielded contact is interchangeable with #12 power contact.
(Y) = Available in Boeing Insert Style.

Threaded Coupling
C48-06RXX-XXXX
MS24266RXXTXXXX
BACC45FS[1]

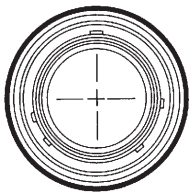

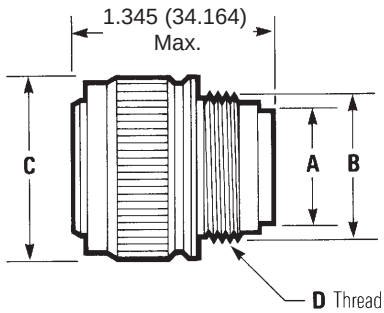

Bayonet Coupling
C48-16RXX-XXXX
MS24266RXXBXXXX
BACC45FT[1]

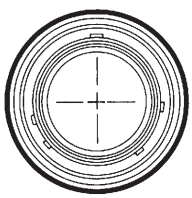

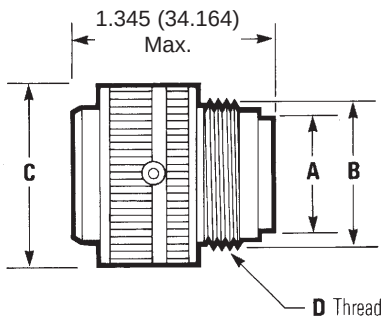

Dimensions

Shell	A. Dia.		B. Dia.		C. Max.		D. Thread
Size	in	mm	in	mm	in	mm	UNEF-2A
8	.328	8.331	.437	11.100	.776	19.712	.437-28
10	.420	10.668	.562	14.275	.906	23.013	.562-24
12	.580	14.732	.750	19.050	1.078	27.381	.750-20
14	.664	16.866	.812	20.625	1.141	28.982	.812-20
16	.769	19.533	.938	23.825	1.266	32.157	.937-20
18	.902	22.911	1.062	26.975	1.375	34.925	1.062-18
20	1.033	26.238	1.182	30.023	1.510	38.354	1.187-18
22	1.152	29.261	1.312	33.325	1.625	41.275	1.312-18
24	1.282	32.253	1.432	36.373	1.760	44.704	1.437-18

[1]Boeing Specifications, see page 3-14.

Square Flange,
Threaded Coupling
C48-OORXX-XXXX
MS24264RXXTXXX
BACC45FM[1]

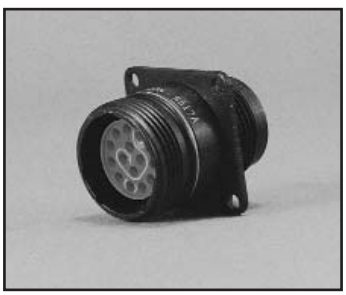

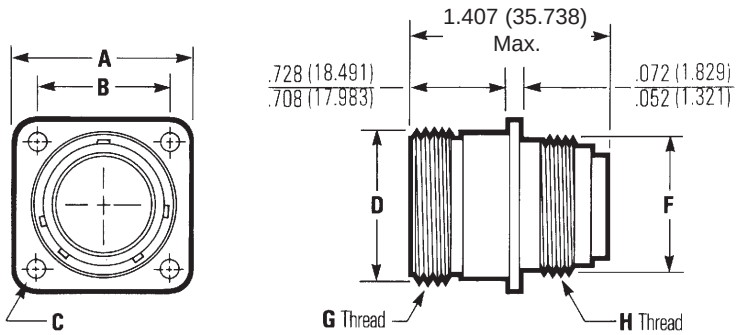

Square Flange,
Bayonet Coupling
C48-1ORXX-XXXX
MS24264RXXBXXX
BACC45FN[1]

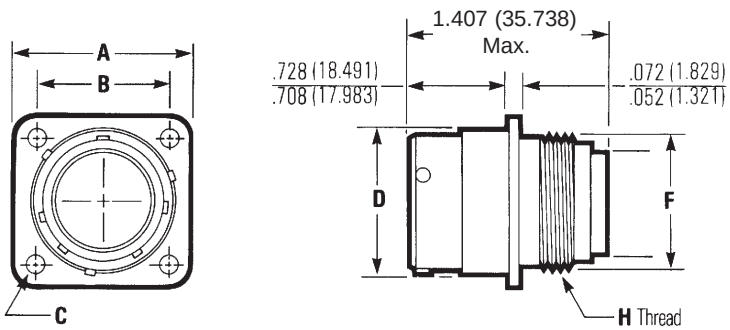

Dimensions

Shell Size	A ±.005 (.127) in	A ±.005 (.127) mm	B ±.005 (.127) in	B ±.005 (.127) mm	C Max. Dia. in	C Max. Dia. mm	D Max. in	D Max. mm	F Max. in	F Max. mm	G Thread UNEF-2A	H Thread UNEF-2A	J Min. in	J Min. mm	K Min. in	K Min. mm
8	.812	20.625	.594	15.088	.125	3.175	.561	14.250	.437	11.100	.562-24	.437-28	.620	15.748	.447	11.354
10	.937	23.800	.719	18.263	.125	3.175	.696	17.679	.562	14.275	.687-24	.562-24	.748	18.999	.572	14.529
12	1.031	26.188	.812	20.625	.125	3.175	.875	22.225	.750	19.050	.875-20	.750-20	.913	23.190	.760	19.304
14	1.125	28.575	.906	23.013	.125	3.175	.935	23.749	.812	20.625	.937-20	.812-20	.980	24.892	.822	20.879
16	1.250	31.750	.969	24.613	.125	3.175	1.062	26.975	.938	23.825	1.062-18	.937-20	1.107	28.119	.948	24.079
18	1.343	34.112	1.062	26.975	.125	3.175	1.187	30.150	1.062	26.975	1.187-18	1.062-18	1.209	30.709	1.072	27.229
20	1.437	36.500	1.156	29.363	.125	3.175	1.312	33.325	1.182	30.023	1.312-18	1.187-18	1.337	33.960	1.192	30.277
22	1.562	39.675	1.250	31.750	.125	3.175	1.437	36.500	1.312	33.325	1.437-18	1.312-18	1.452	36.881	1.322	33.579
24	1.703	43.256	1.375	34.925	.154	3.912	1.562	39.675	1.432	36.373	1.562-18	1.437-18	1.577	40.056	1.442	36.627

[1] = Boeing specifications, see page 3-14.

Single-Hole Mount,
Threaded Coupling
C48-03RXX-XXXX
MS24265RXXTXXX

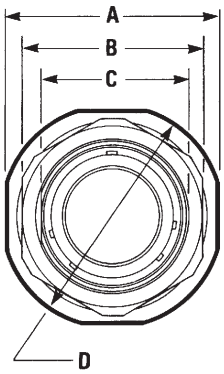

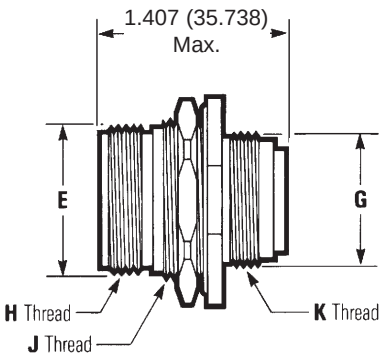

3

Single-Hole Mount,
Bayonet Coupling
C48-13RXX-XXXX
MS24265RXXBXXX

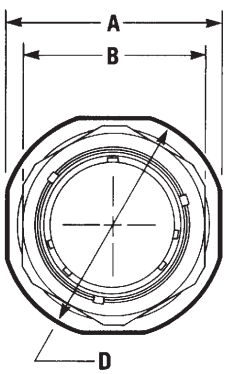

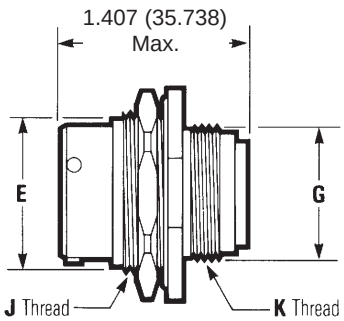

Dimensions

Shell Size	A ±.005 (.127) in	A mm	B Max. Hex in	B mm	C ±.003 (.076) in	C mm	D Max. in	D mm	E Max. Dia. in	E mm	G Max. in	G mm	H Thread UNEF-2A	J Thread UNEF-2A	K Thread UNEF-2A
8	.979	24.867	.828	21.031	.593	15.062	1.068	27.127	.561	14.249	.437	11.100	.562-24	.625-20*	.437-28
10	1.104	28.042	.953	24.206	.718	18.237	1.192	30.277	.696	17.678	.562	14.275	.687-24	.750-20	.562-24
12	1.291	32.791	1.140	28.956	.905	22.987	1.380	35.052	.875	22.225	.750	19.050	.875-20	.937-20	.750-20
14	1.391	35.331	1.250	31.750	.968	24.587	1.505	38.227	.935	23.749	.812	20.625	.937-20	1.000-20	.812-20
16	1.516	38.506	1.329	33.757	1.093	27.762	1.630	41.402	1.062	26.975	.938	23.825	1.062-18	1.125-20*	.937-20
18	1.641	41.681	1.455	36.957	1.217	30.912	1.740	44.196	1.187	30.150	1.062	26.975	1.187-18	1.250-20*	1.062-18
20	1.766	44.856	1.642	41.707	1.342	34.087	1.860	47.244	1.312	33.325	1.182	30.023	1.312-18	1.375-18	1.187-18
22	1.954	49.632	1.705	43.307	1.467	37.262	2.040	51.816	1.437	36.500	1.312	33.325	1.437-18	1.500-20*	1.312-18
24	2.079	52.807	1.892	48.057	1.592	40.437	2.160	54.864	1.562	39.675	1.432	36.373	1.562-18	1.625-18	1.437-18

* Thread: UN-2A

NOTES:
Contact factory for information about Boeing specifications.
For mounting hole dimensions and jam nut torques, see page 3-20.

Square-Flange,
Threaded Coupling
CN0915B-XXXXXXX-XXX

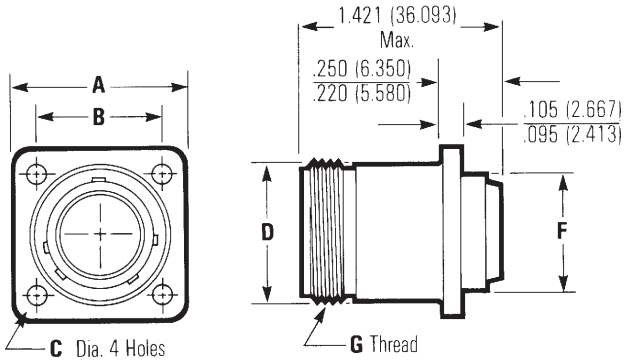

Square-Flange,
Bayonet Coupling
CN0915A-XXXXXXX-XXX

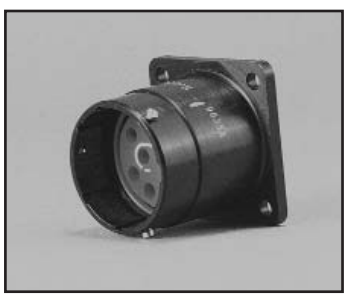

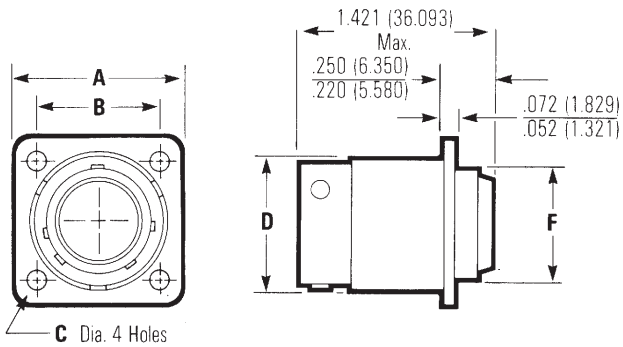

Dimensions

Shell Size	A ±.0045 (.114) in	A mm	B ±.005 (.127) in	B mm	C ±.004 (.102) in	C mm	D Max. in	D mm	F ±.0015 (.038) in	F mm	G Thread UNEF-2A
8	.812	20.625	.594	15.088	.121	3.073	.561	14.250	.497	12.624	.562-24
10	.937	23.800	.719	18.263	.121	3.073	.696	17.679	.503	15.799	.687-24
12	1.031	26.187	.812	20.625	.121	3.073	.875	22.225	.745	18.923	.875-20
14	1.125	28.575	.906	23.012	.121	3.073	.935	23.749	.871	22.123	.937-20
16	1.150	29.210	.969	24.613	.121	3.073	1.062	26.975	.995	25.273	1.062-18
18	1.343	35.382	1.062	26.975	.121	3.073	1.187	30.150	1.058	26.873	1.187-18
20	1.437	36.500	1.156	29.362	.121	3.073	1.312	33.325	1.184	30.074	1.312-18
22	1.562	39.675	1.250	31.750	.121	3.073	1.437	36.500	1.307	33.198	1.437-18
24	1.703	43.256	1.375	34.925	.154	3.912	1.562	39.675	1.432	36.373	1.562-18

Ordering Information[1]

CN0915 A 10 A 05 P N - 000

Series Designation
CN0915

Series Modification
A - Bayonet Coupling
B - Threaded Coupling

Shell Size
8, 10, 12, 14, 16, 18, 20, 22, & 24

Environmental Class
A - Anodized Aluminum
N - Electroless Nickel-Plated Aluminum
S - Stainless Steel

Order Code
000 - Less Contacts
200 - Gold-Plated Contacts
* See below

Shell Position
N, 6, 7, 8, 9, 10 (See page 3-4)

Contact Style
P - Pin
S - Socket

Insert Arrangement
(See page 3-4)

NOTES:

[1] For other modifications, classes, etc., contact factory.
- For mounting hole dimensions, see page 3-20.
- Uses CRIM-LOK contacts. See page 3-12.

* **Former order code - 100 designated rhodium plated contacts**

Single-Hole Mount,
Bayonet Coupling
CN0942D XXXXXXXXX
CN0944D XXXXXXXXX

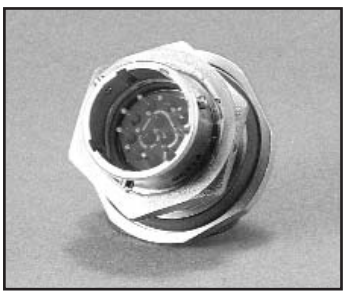

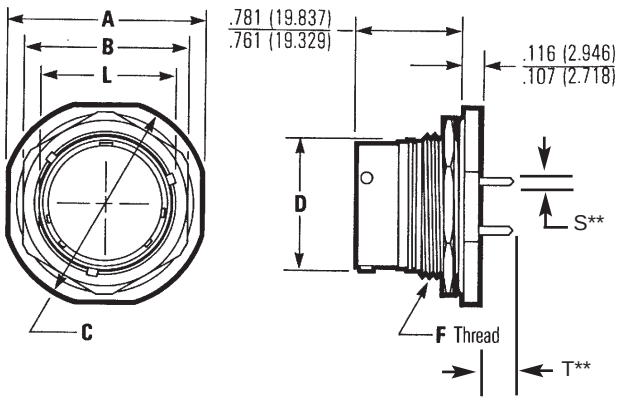

Square Flange,
Bayonet Coupling
CN0942B XXXXXXXXX
CN0944B XXXXXXXXX

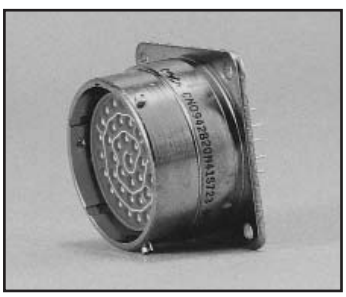

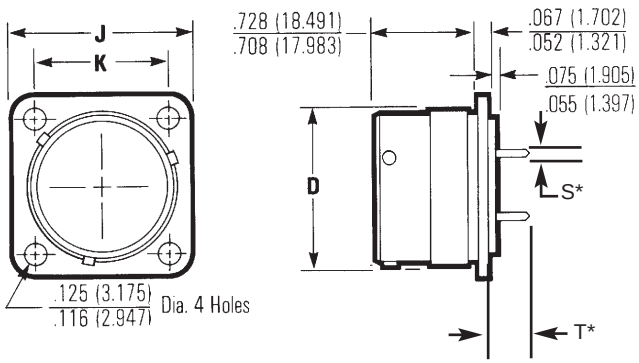

Dimensions

Shell	A Max.		B Max.		C Max.		D Max.		F Thread	J ±.005 (.127)		K ±.005 (.127)		L ±.003 (.176)	
Size	in	mm	in	mm	in	mm	in	mm	UNEF-2A	in	mm	in	mm	in	mm
8	.984	24.994	.828	21.031	1.068	27.127	.561	14.250	.625-20*	.812	20.625	.594	15.088	.593	15.062
10	1.109	28.169	.953	24.206	1.192	30.277	.696	17.679	.750-20	.937	23.800	.719	18.263	.718	18.237
12	1.296	32.919	1.140	28.956	1.380	35.052	.875	22.225	.937-20	1.031	26.188	.812	20.625	.905	22.987
14	1.396	35.459	1.250	31.750	1.505	38.227	.935	23.749	1.000-20	1.125	28.575	.906	23.013	.968	24.587
16	1.521	38.634	1.329	33.757	1.630	41.402	1.062	26.975	1.125-20*	1.250	31.750	.969	24.613	1.093	27.762
18	1.646	41.809	1.455	36.957	1.740	44.196	1.187	30.150	1.250-20*	1.343	34.112	1.062	26.975	1.217	30.912
20	1.771	44.984	1.642	41.707	1.860	47.244	1.312	33.325	1.375-18	1.437	36.500	1.156	29.363	1.342	34.087
22	1.959	49.759	1.705	43.307	2.040	51.816	1.437	36.500	1.500-20*	1.562	39.675	1.250	31.750	1.467	37.262
24	2.084	52.934	1.892	48.057	2.160	54.864	1.562	39.675	1.625-18	1.703	43.256	1.375	34.925	1.592	40.437

* Th'd: UN-2A
** See "S" and "T" dimensions on page 3-10.

CN0942 Series: Fluorosilicone Inserts

Termination Designator	Contact Style	Termination T Min.	Termination S ± .002
01*	P & S	.250	.025
02*	X & Y	.230	N/A
03**	P & S	.144	.025
04**	X & Y	.124	N/A
06*	T & W	.900	.025

* Applies to CN0942B/CN0942C.
** Applies to CN0942D/CN0942E.

Ordering Information[1]

CN0942 B 10 J 05 P N O1

Series Designation

Series Modification
B - Square-Flange Mount Bayonet Coupled
C - Square-Flange Mount Thread Coupled
D - Single-Hole Mount Bayonet Coupled
E - Single-Hole Mount Thread Coupled

Shell Size
8, 10, 12, 14, 16, 18, 20, 22, & 24

Class
G - Cadmium/Nickel Finish
J - Anodized Finish
N - Electroless Nickel Finish

Insert Arrangement
(See page 3-4)

Termination
(See table)

Shell Position
N, 6, 7, 8, 9, Y (See page 3-4)

Contact Style
• Solder Pin Terminal
P - Pin
S - Socket
• Solder Cup Terminal
X - Pin
Y - Socket
• Wire Wrap Terminal
T - Pin
W - Socket

NOTES:
[1] For other modifications, class, etc., consult factory.
For mounting hole dimensions, see page 3-20.

CN0944 Series: Neoprene Inserts

Termination Designator	Term Type	Termination T Min.	Termination S ± .002
01*	B	.250	.025
02*	C	.230	N/A
03**	B	.144	.025
04**	C	.124	N/A
06*	W	.900	.025

* Applies to CN0944B/CN0944C.
** Applies to CN0944D/CN0944E.

Ordering Information[1]

CN0944 B 10 R 05 P N C O1

Series Designation
CN0944

Series Modification
B - Square-Flange Mount Bayonet Coupled
C - Square-Flange Mount Thread Coupled
D - Single-Hole Mount Bayonet Coupled
E - Single-Hole Mount Thread Coupled

Shell Size
8, 10, 12, 14, 16, 18, 20, 22, & 24

Environmental Class
G - Cadmium/Nickel Finish
N - Electroless Nickel Finish
R - Anodized Finish

Termination
(See table)

Termination Type
B - Solder Pin
C - Solder Cup
W - Wire Wrap

Shell Position
N, 6, 7, 8, 9, Y (See page 3-4)

Contact Style
P - Pin
S - Socket

Insert Arrangement
(See page 3-4)

NOTES:

[1] For other modifications, class, etc., consult factory.
For mounting hole dimensions, see page 3-20.

Cable Support Assembly

Cable clamps support cable or wire at the plug or receptacle and prevent twisting and pulling.

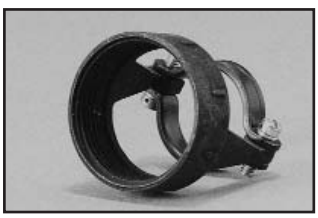

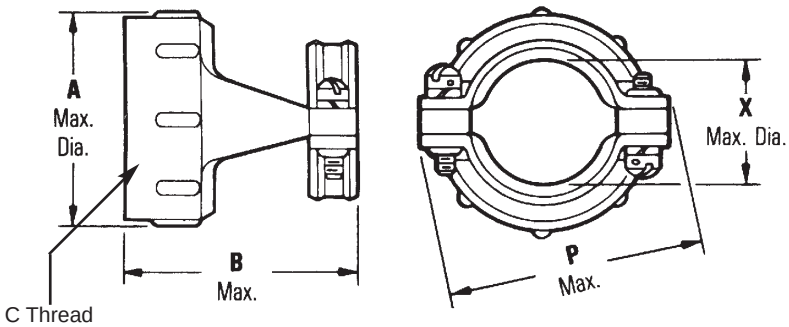

Dimensions

Size	Cinch Part No.	MS	A Max. Dia. in	A Max. Dia. mm	B ±.015 (.381) in	B ±.015 (.381) mm	X I.D. ±.005 (.127) in	X I.D. ±.005 (.127) mm	C Th'd UNEF-2B	P Max. in	P Max. mm
8	C48-2840	MS27291-13	.606	15.393	.935	23.749	.186	4.725	.437-28	.789	20.042
10	C48-2341	MS27291-1	.731	18.568	.935	23.749	.270	6.858	.562-24	.914	23.216
12	C48-2342	MS27291-2	.919	23.343	.935	23.749	.400	10.160	.750-20	1.026	26.061
14	C48-2343	MS27291-3	.981	24.918	1.170	29.718	.460	11.684	.812-20	1.090	27.686
16	C48-2344	MS27291-4	1.106	28.093	1.170	29.718	.610	15.494	.937-20	1.250	31.750
18	C48-2345	MS27291-5	1.231	31.268	1.170	29.718	.690	17.526	1.062-18	1.358	34.493
20	C48-2643	MS27291-14	1.356	34.443	1.170	29.718	.816	20.728	1.187-18	1.481	37.619
22	C48-2346	MS27291-6	1.481	37.618	1.170	29.718	.940	23.876	1.312-18	1.604	40.742
24	C48-2644	MS27291-15	1.606	40.793	1.170	29.178	1.066	27.078	1.437-18	1.729	43.919

Contacts

When you order Cinch C48 Series connectors with contacts, the contact package contains enough contacts to complete the insert arrangement plus two spares. The package also includes sealing plugs for 15% of the contacts in the inserts, minimum of three. To provide proper sealing, insert unwired contacts and sealing plugs in all unused holes. (Use a #12 contact for a #1 shielded hole.) To order contacts and sealing plugs separately use the part numbers in the table below.

Contact Size	Max. Wire Size AWG	Current Rating Amps	Cinch Part No. Pin	Cinch Part No. Socket	MS Part No. Pin	MS Part No. Socket
	24	3.0				
No. 20	22	5.0	CN0900-253	CN0900-255	M39029/31-241	M39029/32-260
	20	7.5				
	18	16				
No. 16	16	22	CN0900-252	CN0900-254	M39029/31-229	M39029/32-248
	14	32				
No. 12	12	41	CN0900-256	CN0900-257	M32029/31-235	M39029/32-254
	**	3	C48-1226-02	C48-1227-02	--	--
No. 1*	****	1	C48-1226-54	C48-1227-54	--	--
(Shielded)	*****	1	C48-1226-55	C48-1227-55	--	--
No. 2 (Shielded)	***	7.5	C48-2187-02	C48-2188-02	--	--

* Fits into No. 12 power contact cavity.
** Accommodates cables RG174/U, RG179U, RG179A/U, RG187/U, RG188/U, RG161/U, as well as shielded wire.
Can also accommodate Cable MIL-C-27500-22 KING (Extruded) or 22 AWG per MIL-C-7078 type II.
*** Accommodates Cable MIL-C-27500 KING; 20 KING; 18 KING (Extruded) or 22, 20, 18 AWG, per MIL-C-7078 type II.
**** For use with RG195/U and RG180/U, RG180A/U, and RG1808/U.
***** Accommodates Cables RG178/U, RG178A/U, RG1788/U, and RG196/U.

3

Grommet Sealing Plugs

Color Code	Size	Cinch Part No.	MS Part No.
Yellow	12 & #1 Shielded	C48-2221-12	MS27488-12
Blue	16	C48-2221-16	MS27488-16
Red	20	C48-2221-20	MS27488-20
White	#2 Shielded	C48-1458-01	--

Tools

Contact Size	Crimp Tool	Insertion Tool Superseded No.	Insertion Tool Current No.	Removal Tool Superseded No.	Removal Tool Current No.
No. 20	M22520/1-01	MS24256A20	M81969/17-03	MS24256R20	M81969/19-06
No. 16	M22520/1-01	MS24256A16	M81969/17-04	MS24256R16	M81969/19-01
No. 12	M22520/1-01	MS24256A12	M81969/17-05	MS24256R12	M81969/19-02
	Adjustable Turret				
No. 20	M22520/1-02				
No. 16	M22520/1-02				
No. 12	M22520/1-02				
No. 1 (Shielded)		MS24256A12	M81969/17-05	MS24256R12	M81969/19-09
No. 2 (Shielded)		--	294-128	--	294-127

Cinch

FEATURES

- *Cinch has qualified a series of connectors to Boeing Specifications in bayonet and threaded styles that meet high-performance requirements for:*

  + Vibration

  + Shielding Effectiveness

  + Fluid Resistance

	BACC63 Series				
	BN	*BP*	*BV*	*CB*	*CC*
Vibration-resistant Bayonet Plug	●			●	
Vibration-resistant Self-Locking threaded Plug		●			
Optional Ground Spring on Plug		●		●	
Shielded Connectors		●	●	●	●
Advanced fluid-resistant elastometers		●	●	●	●
Non-rotating accessory teeth conforming to MS3155		●	●	●	●
Optional Stainless Steel Shells		●	●		

BOEING TO Cinch CROSS-REFERENCE DATA

Cinch Part Numbers and Order Codes
For Applicable Purchase Order Exceptions, see Note 6.

Boeing Part Numbers	No Exceptions	Less Contacts	Less Contacts & Cable Support	Less Cable Support
BACC45FM**-**P	C48-00R**Y**P-402	-406	-406	-402
A P6	P6-410	-415	-416	-412
B P7	P7-420	-425	-426	-422
C P8	P8-430	-435	-436	-432
D P9	P9-440	-445	-446	-442
E P10	P10-450	-455	-456	-452
BACC45FN**-**P6	C48-10R**Y**P6-402	-406	-406	-402
BACC45FS**-**P6	C48-06R**Y**P6-402	-406	-406	-402
BACC45FT**-**P6	C48-16R**Y**P6-402	-406	-402	-406
(BACC63 Types)				
BACC63BN*-**P6	C0909A**-**P6Y402	Y406	Y406	Y402
B	Y420	Y425	Y426	Y422
C	Y430	Y435	Y436	Y432
BACC63BP**A**P6	CN0966A**A**P6Y140	Y040	N/A	N/A
B	A**S**P6Y140	Y040	N/A	N/A
C	B**G**P6Y140	Y040	N/A	N/A
D	B**S**P6Y140	Y040	N/A	N/A
BACC63BV**A**P6	CN0967C**A**P6Y140	Y040	N/A	N/A
B	S**P6Y140	Y040	N/A	N/A
F	G**P6Y140	Y040	N/A	N/A
BACC63CB**-**P6	CN1020A**G**P6Y140	Y040	N/A	N/A
BACC63CC**-**P6	CN1021A**G**P6Y140	Y040	N/A	N/A

See Note 2 · See Note 3 · See Note 5 · See Note 7 · See Note 4

NOTES:

1. All parts are marked with Boeing part number.

2. Part number system also applies to BACC45FN, BACC45FS, and BACC45FT.

3. May be “Y” or “–” (dash) designator
   “Y” = Insert arrangements with size 20 contacts (see page 3-4) use small wire grommet seals, Boeing insert discs, and hard socket inserts.
   “-” = Insert arrangements that contain no size 20 contact locations. Use standard “MS” grommets, discs, and inserts.

4. “P6” represents contact style and shell polarities defined in individual part numbering systems.

5. Specifies optional cable support:
   "–" = No cable support
   "A" = BACC10GH Straight Single-Leg Clamp
   "B" = MS27559 Right-Angle Saddle Clamp
   "C" = MS27291 Straight Saddle Clamp
   "D" = BACC10JC Right-Angle Single Leg Clamp
   "E" = BACC10JS Straight Single-Leg Composite Clamp

6. The Boeing specifications permit omission of contacts and/or cable support through purchase order exceptions.

7. Specifies material and shell designs. See Boeing specification.

** These part number fields represent shell size and insert arrangement as defined in individual part number systems.

Threaded Coupling
CN0966XXXXXXXX
BACC63BP[1]

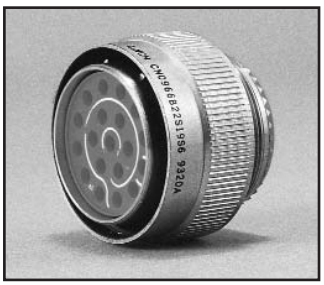

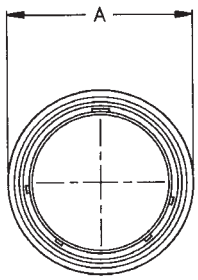

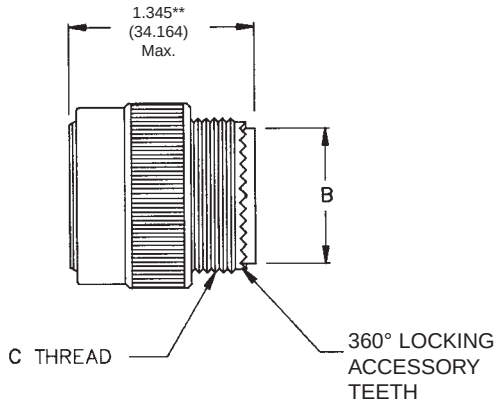

3

Dimensions

Shell Size	A ± .005 (.127) in	A ± .005 (.127) mm	B Max. Dia. in	B Max. Dia. mm	C Thread UNEF-2A
8	.835	21.209	.306	7.773	.500-20
10	.972	23.698	.371	9.423	.625-24
12	1.165	27.254	.547	13.894	.750-20
14	1.230	30.124	.613	15.570	.875-20
16	1.355	33.198	.758	19.253	1.000-20
18	1.470	34.798	.865	21.971	1.0625-18
20	1.607	38.100	.986	25.044	1.1875-18
22	1.735	41.148	1.106	28.092	1.3125-18
24	1.858	44.069	1.235	31.369	1.4375-18
28	2.113	52.070	1.485	37.719	1.750-18*

Ordering Information[2]

CN0966 B 10 S 05 P N - 000

Series Designation
CN0966

Series Modification
A - Ungrounded
B - Grounded (Conductive)

Shell Size
8, 10, 12, 14, 16, 18, 20, 22, 24, 26, 28

Class
A - Anodized Aluminum
G - Cadmium/Nickel-Plated Aluminum
K - Stainless Steel Flame Resistant
N - Electroless Nickel-Plated Aluminum
S - Stainless Steel

Order Code (Deviations)[1]
000 - Less Contacts
100 - * See below
200 - With Gold-Plated Contacts

Alternate Shell Positions
N, 6, 7, 8, 9, 10
Per table on page 3-4

Contact Style
P - Pin Insert
S - Socket Insert

Insert Arrangements
(See page 3-4)

Notes:
[1] For Boeing Specification, see page 3-14.
[2] For modifications, classes, etc. not listed, consult factory.
* Th'd: UNS-2A
** Size 28 = 1.395 (35.434)
*** Former order code - 100 designated rhodium plated contacts**

CN0967 (C48 Series)
Vibration-Resistant Receptacle

Cinch

Threaded Coupling
CN0967XXXXXXXX
BACC63BV[1]

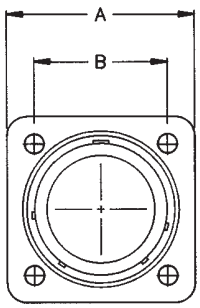

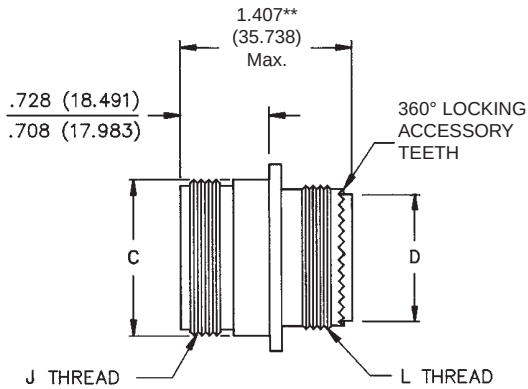

3

Dimensions

Shell Size	A +.0045 (.114) in	A mm	B +.005 (.127) in	B mm	C Max. in	C mm	D Max. Dia. in	D mm	J Thread UNEF-2A	L Thread UNEF-2A
8	.812	20.625	.594	15.088	.561	14.250	.328	8.331	.5265-24	.5000-20
10	.937	23.800	.719	18.263	.696	14.250	.371	9.423	.6875-24	.6250-24
12	1.031	26.187	.812	20.625	.875	17.679	.547	13.894	.8750-20	.7500-20
14	1.125	28.575	.906	23.012	.935	22.225	.609	15.469	.9375-20	.8750-20
16	1.250	31.750	.969	24.613	1.062	23.749	.758	19.253	1.0625-18	1.0000-20
18	1.343	34.112	1.062	26.975	1.187	30.150	.865	21.971	1.1875-18	1.0625-18
20	1.437	36.500	1.156	29.362	1.312	33.325	.986	25.044	1.3125-18	1.1875-18
22	1.562	39.675	1.250	31.750	1.437	36.500	1.106	28.092	1.4375-18	1.3125-18
24	1.703	43.256	1.375	34.925	1.562	39.675	1.235	31.369	1.5625-18	1.4375-18
28	2.000	50.800	1.562	39.675	1.810	45.976	1.485	37.719	1.8125-16	1.750-18*

Ordering Information[2]

CN0967 C 10 S 05 P N - 000

Series Designation
CN0967

Series Modification
C - Square-Flange Mount
G - Square-Flange with Clinch Nuts

Shell Size
8, 10, 12, 14, 16, 18, 20, 22, 24, 26, 28

Environmental Class
A - Anodized Aluminum
G - Cadmium/Nickel-Plated Aluminum
K - Stainless Steel, Flame Resistant
N - Electroless Nickel-Plated Aluminum
S - Stainless Steel

Order Code (Deviations)
000 - Less Contacts
100 - * See below
200 - With Gold-Plated Contacts

Alternate Shell Position
N, 6, 7, 8, 9, 10
Per table on page 3-4.

Contact Style
P - Pin
S - Socket

Insert Arrangements
(See page 3-4)

NOTES:
[1] For Boeing Specification, see page 3-14.
[2] For modifications, classes, etc., not listed, consult factory.
• For mounting hole dimensions, see page 3-20.
* Th'd: UNS-2A
**Size 28 = 1.457 (37.008)
*** Former order code - 100 designated rhodium plated contacts**

Bayonet Coupling
CN1020-XXXXXXXX
BACC63CB[1]

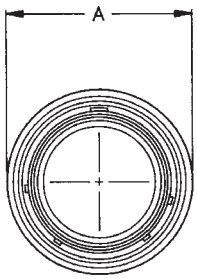

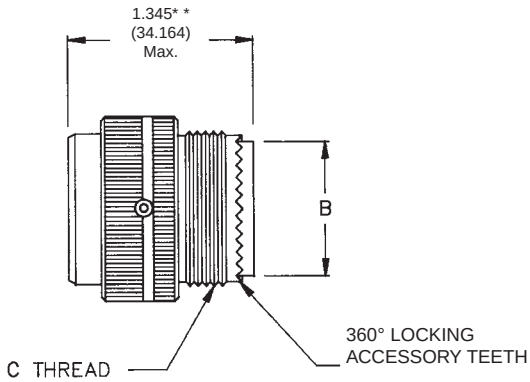

3

Dimensions

Shell Size	A ± .005 (.127) in	A ± .005 (.127) mm	B Max. Dia. in	B Max. Dia. mm	C Thread UNEF-2A
8	.765	19.447	.306	7.773	.500-20
10	.967	24.561	.371	9.423	.625-24
12	1.078	27.381	.547	13.894	.750-20
14	1.187	30.149	.613	15.570	.875-20
16	1.309	33.248	.758	19.253	1.000-20
18	1.375	34.925	.865	21.971	1.0625-18
20	1.505	38.227	.986	25.044	1.1875-18
22	1.625	41.275	1.106	28.092	1.3125-18
24	1.755	44.577	1.235	31.369	1.4375-18
28	2.161	54.889	1.485	37.719	1.750-18*

Ordering Information[2]

CN1020 A 10 G 05 P N - 000

Series Designation
CN1020

Series Modification
A - Standard Plug

Shell Size
8, 10, 12, 14, 16, 18, 20, 22, 24, 26, 28

Environmental Class
A - Anodized Aluminum
G - Cadmium//Nickel-Plated Aluminum

Insert Arrangements
(See page 3-4)

Contact Style
P - Pin
S - Socket

Alternate Shell Positions
N, 6, 7, 8, 9, 10
Per table on page 3-4.

Order Code (Deviations)[1]
000 - Less Contacts
100 - * See below
200 - With Gold-Plated Contacts

Notes:
[1] For Boeing Specification, see page 3-14.
[2] For modification, classes, etc., not listed, consult factory.
* Th'd: UNS-2A
** Size 28 = 1.395 (35.434)
*** Former order code - 100 designated rhodium plated contacts**

CN1021 Series (C48 Family)
Vibration-Resistant Receptacle

Cinch

Bayonet Coupling
CN1021XXXXXXXX
BACC63CC[1]

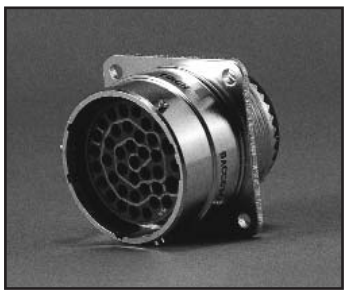

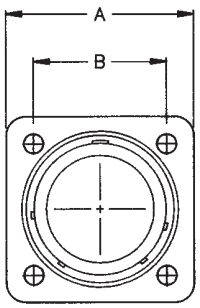

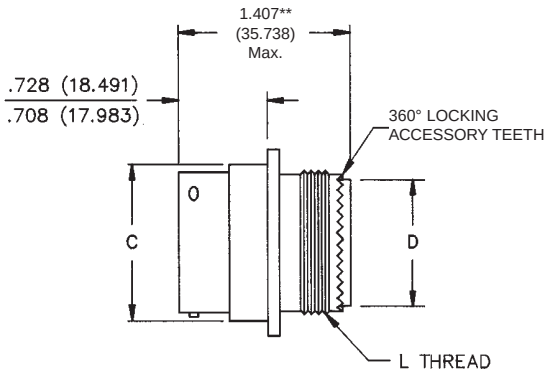

Dimensions

Shell Size	A +.0045 (.114) in	A mm	B +.005 (.127) in	B mm	C Max. in	C mm	D Max. Dia. in	D mm	L Thread UNEF-2A
8	.812	20.625	.594	15.088	.561	14.250	.328	8.331	.500-20
10	.937	23.800	.719	18.263	.696	14.250	.371	9.423	.625-24
12	1.031	26.187	.812	20.625	.875	17.679	.547	13.894	.750-20
14	1.125	28.575	.906	23.012	.935	22.225	.609	15.469	.875-20
16	1.250	31.750	.969	24.613	1.062	23.749	.758	19.253	1.000-20
18	1.343	34.112	1.062	26.975	1.187	30.150	.865	21.971	1.0625-18
20	1.437	36.500	1.156	29.362	1.312	33.325	.986	25.044	1.1875-18
22	1.562	39.675	1.250	31.750	1.437	36.500	1.106	28.092	1.3125-18
24	1.703	43.256	1.375	34.925	1.562	39.675	1.235	31.369	1.4375-18
28	2.000	50.800	1.562	39.675	1.810	45.976	1.485	37.719	1.750-18*

Ordering Information[2]

CN1021 A 10 G 05 P N - 000

Series Designation
CN1021

Series Modification
A - Square-Flange Mount
C - Square-Flange with Clinch Nuts

Shell Size
8, 10, 12, 14, 16, 18, 20, 22, 24, 26, 28

Environmental Class
A - Anodized Aluminum
G - Cadmium/Nickel-Plated Aluminum

Order Code (Deviations)
000 - Less Contacts
100 - * See below
200 - With Gold-Plated Contacts

Alternate Shell Position
N, 6, 7, 8, 9, 10
Per table on page 3-4.

Contact Style
P - Pin
S - Socket

Insert Arrangements
(See page 3-4)

Notes:
1 For Boeing Specification, see page 3-14.
2 For modifications, classes, etc. not listed, consult factory.
• For mounting hole dimensions, see page 3-20.
* Th'd: UNS-2A
** Size 28 = 1.457 (37.008)
*** Former order code - 100 designated rhodium plated contacts**

C0909A MMB Series (C48 Family)
Vibration-Proof Plug Connector

Cinch

Bayonet Coupling
C0909AXXXXXXX
BACC63BN[1]

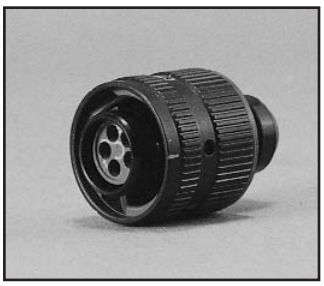

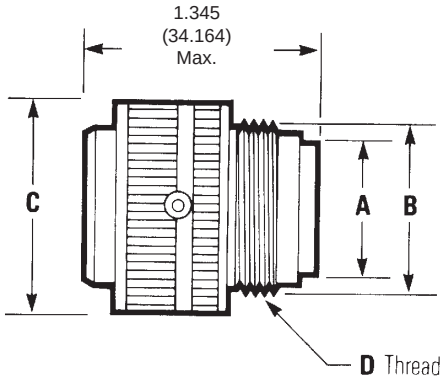

3

Dimensions

Shell Size	A Dia. in	A Dia. mm	B Dia. in	B Dia. mm	C Max. in	C Max. mm	D Thread UNEF-2A
8	.328	8.331	.437	11.100	.766	19.456	.437-28
10	.420	10.668	.562	14.275	.906	23.012	.562-24
12	.580	14.732	.750	19.050	1.078	27.381	.750-20
14	.664	16.866	.812	20.625	1.141	28.981	.812-20
16	.769	19.533	.938	23.825	1.266	32.156	.937-20
18	.902	22.911	1.062	26.975	1.375	34.925	1.062-18
20	1.033	26.238	1.182	30.023	1.510	38.354	1.187-18
22	1.152	29.261	1.312	33.325	1.625	41.275	1.312.18
24	1.282	32.253	1.432	36.373	1.760	44.704	1.437-18

Ordering Information[2]

C0909A 10 - 05 P 8 - XXX

Series Designation
C0909A

Shell Size
8, 10, 12, 14, 16, 18, 20, 22, 24

Class
(Dash) - Anodized Aluminum
E - Cadmium/Nickel-Plated Aluminum
N - Nickel-Plated Aluminum

Order Code (Deviations)
202 - With Gold-Plated Contacts*
106 - Less Contacts

Alternate Shell Positions
N, 6, 7, 8, 9, 10
Per table on page 3-4.

Contact Style
P - Pin Insert
S - Socket Insert

Insert Arrangements
(See page 3-4)

Notes:
[1] For Boeing Specification, see page 3-14.
[2] For deviations, classes, etc. not listed, consult factory.
*** Former order code - 102 designated rhodium plated contacts**

Square-Flange Mount

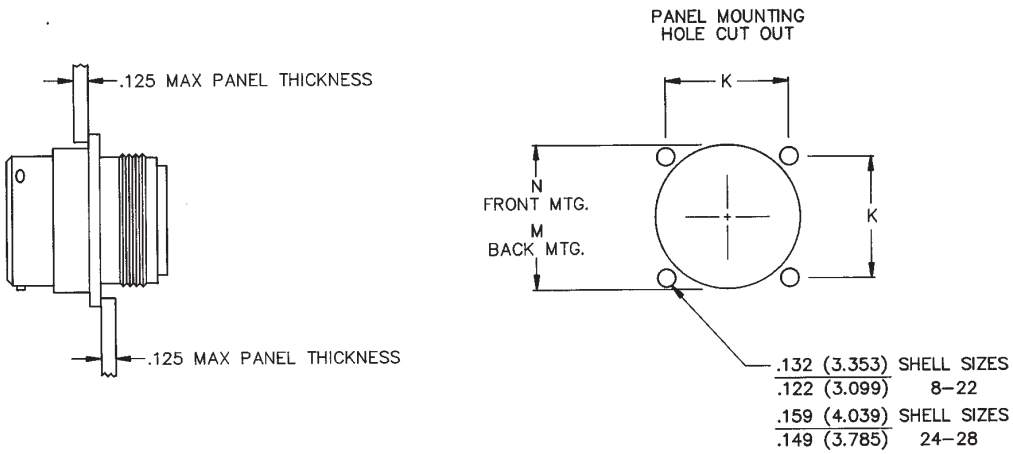

Single-Hole Mount (Jam-Nut Mount)

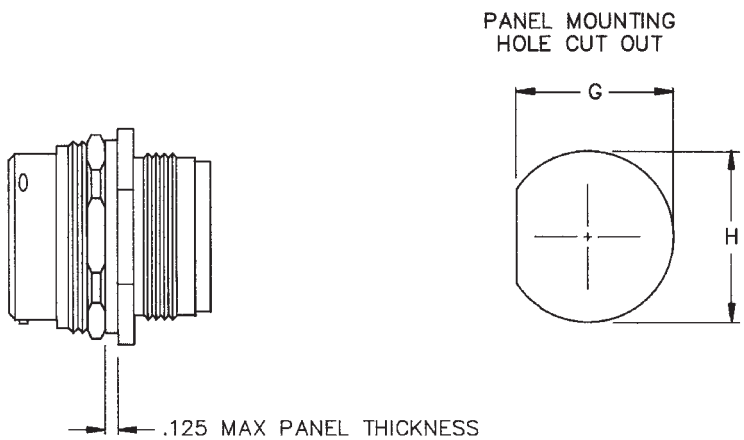

Dimensions

Shell Size	M Min. in	M Min. mm	N Min. in	N Min. mm	G ±.005 (.127) in	G ±.005 (.127) mm	H ±.005 (.127) in	H ±.005 (.127) mm	K ±.005 (.127) in	K ±.005 (.127) mm
8	.620	15.748	.447	11.354	.605	15.638	.635	16.129	.594	15.088
10	.748	18.999	.572	14.529	.730	18.542	.760	19.304	.719	18.263
12	.913	23.190	.760	19.304	.917	23.292	.947	24.054	.812	20.625
14	.980	24.892	.822	20.879	.980	24.892	1.010	25.654	.906	23.013
16	1.107	28.119	.948	24.079	1.105	28.067	1.135	28.829	.969	24.613
18	1.209	30.709	1.072	27.229	1.225	31.115	1.260	32.004	1.062	26.975
20	1.337	33.906	1.192	30.277	1.350	34.290	1.385	35.179	1.156	29.363
22	1.452	36.881	1.322	33.579	1.475	37.465	1.510	38.354	1.250	31.750
24	1.577	40.056	1.442	36.627	1.600	40.640	1.635	41.529	1.375	34.925
28	1.827	46.406	1.760	44.704	1.856	47.143	1.885	47.879	1.562	39.675

Recommended Minimum Torque for Jam Nut

Shell Size	8	10	12	14	16	18	20	22	24
Torque (Inch/lb.)	28	36	56	64.5	69	81	102	122.5	144

D-SUBMINIATURE

D*KL Series
D*A Series
D*U Series
Basic D Series
Series 3 - High Reliability
Backshells/Junctionshells/Hoods
Application Tooling
HTD/HPD Series
Overmold Kits
T* Series
Series 1 - High Reliability
M24308 Series
Accessories

Cinch

The D-subminiature is one of the most popular styles of connectors in the I/O category. It is used in computer, telecom, datacom, medical, and test instrumentation applications as well as in the military and aerospace fields.

Types of D-subminiature connectors manufactured by Cinch

- Printed Circuit Board connectors:
  - Vertical connectors for panel mounting with Dip Solder PC tails.
  - Right-Angle connectors for board mounting with Dip Solder PC tails.
- Wire Termination connectors for cable assemblies or wire harnesses:
  - Crimp and Poke connectors.
  - Solder Cup connectors.
  - Insulation Displacement connectors IDCs to terminate discrete wire or flat cable.
  - Wire Wrap connectors.

How to read this section

- The information pages provide standard data common to all D-subminiature connectors. These include:

  - D-subminiature contact arrangements - see page 4-5.
  - Panel mounting specifications/hardware - see page 4-6.
  - D-subminiature shell dimensions - see page 4-7.
  - D-subminiature and combo D layouts - see pages 4-5, 4-8 thru 4-10, and 4-56.
  - General Performance Specifications - see page 4-2.
  - PCB thickness chart - see page 4-8.

- D-subminiature pages are grouped by series. A series is a family of connectors with a similar performance level. Each series shares a set of features and specifications, from economical and commercial grade product to high-reliability and military connectors. Each series begins with a page outlining general features and specifications of connectors, followed by the pages on individual connectors with drawings or features specific to that connector. Drawings reflect clarifications of dimensions not called out in the information pages of this catalog. The features of each series can be found in the chart on page 4-4.

- Accessories including backshells, junction shells, and hoods as well as hardware can be found on pages 4-80 thru 4-99.

- Termination tooling for Cinch connectors can be found at the end of the D-subminiature section of this catalog on pages 4-100 thru 4-104.

General Information

- All connectors are intermateable with any Cinch D-subminiature of comparable pin count and density, or the D-sub connector of any other manufacturer complying dimensionally with MIL-C-24308.
- Solder terminations and boardlocks meet the requirements for solderability in accordance with MIL-STD-202, Method 208.
- DURABILITY
  - Mated connectors are subjected to cycles of insertions and withdrawals specified on the catalog page. After the prescribed cycles the connectors will meet the Cinch requirements concerning insertion-withdrawal force, individual contact insertion-withdrawal force, and contact resistance.
- APPROVALS
  - Most Cinch connectors have UL recognition and CSA approval; however, the specific approvals are listed on the individual catalog pages.
- CONTACTS
  - Cinch connector contacts are generally offered in Gold Flash or 30µin. gold plating for commercial product, and 50µin. gold plating for M24308 Series Military D-subminiature connectors.
  - Cinch connectors utilize economical stamped and formed contacts and/or screw machine contacts for enhanced performance.
  - Standard density connectors utilize size 20 contacts.
  - Cinch 1.5 Density Series connectors utilize size 22 contacts for greater density in a standard size D-subminiature outer shell.
- METAL SHELLS
  - Commercial-grade steel shells are usually available in zinc plating with yellow chromate finish or tin plating.
  - Tin-plated plugs have grounding indents.
  - Military grade M24308 Series connector shells are generally steel or in certain cases non-magnetic brass with cadmium plating and yellow chromate finish.
  - Insulator materials are glass-filled polyester, glass-filled nylon, and diallyl phthalate.
- The connectors are usually available in plugs and sockets in 9, 15, 25, 37, and 50 position sizes.

Printed Circuit Board Connectors

- Cinch provides connectors in various footprints, contact diameters, and lengths in both vertical and right-angle PC mount styles with dip solder tails.
- Cinch PCB connectors have metal shells.

Connectors for Terminating Cable Wire

- Wire Wrap connectors are available in two tail lengths for two-wrap and three-wrap terminations. The contact is terminated by wrapping wire around it using a wire wrap gun. This connector is especially useful for prototyping since the wire can be unwrapped and rewrapped if necessary.
- Solder Cup connectors allow reliable long-term termination by soldering the wire directly into the connector contact. Cinch Solder Cups accommodate up to 20 AWG wire.
- Crimp and Poke connectors allow the wire to be terminated more economically than wire wrap or solder cup styles. Contacts are crimped and inserted into the connector. In our D*U Series, the contact is crimped around the conductor wire. In our D*A Series, the contact is crimped around the wire and the insulation. Crimp and Poke connectors can be selectively loaded to save labor and material cost.
- IDC connectors are an alternative to other types of wire termination connectors. IDC is much faster and very reliable when all contacts are terminated and the volume is high. IDC utilizes mass termination of the cable wire. This can save considerable time and expense in the cable assembly process. The estimated time of terminating two ends of a 25-conductor discrete wire cable with 25-position D-subminiature connectors is about 5-1/2 to 6 minutes less per cable assembly using IDC connectors and Cinch Auto-Clinch termination tooling versus using Crimp and Poke connectors. This may vary considerably based on the operator, cable wire, and process. Cinch offers IDC connectors in two versions-for discrete wire or flat ribbon termination.

Feature Guide

The chart below contains Cinch D-subminiature product features and styles grouped by series.

Performance Level	Economical		Commercial				High-Reliability		Military
Series	**D*KL**	**HPD/HTD**	**D*A**	**D*U**	**T**	**Basic D**	**Series 1**	**Series 3**	**M24308**
Termination Type									
Vertical PCB	4-12			4-26		4-42	4-50		4-76
Right-Angle PCB	4-12	4-16		4-26			4-50		4-76
Crimp and Poke		4-16	4-20	4-26				4-72	4-76
Solder Cup					4-34	4-42	4-50		4-76
IDC					4-34				
Wire Wrap						4-42			
Insulator Material									
G-F Nylon			●	●					
G-F Polyester	●	●			●	●			
Diallyl Phthalate							●	●	●
Shell Material									
All Plastic					●				
Steel Shell	●	●	●	●	●	●	●	●	●
Shell Plating									
Tin-Lead Plating	●	●	●	●	●	●	●	●	
Zinc Plating-Y/C finish			●	●	●	●	●	●	
Cadmium Plating-Y/C finish							●*	●	●
Contact Plating									
Gold-Flash Plating	●	●	●	●	●	●			
30µin. Gold Plating	●	●	●	●	●	●	●	●	
50µin. Gold Plating							●*	●	●
Contact Type									
Stamped Contacts	●	●	●	●	●	●			
Machined Contacts				●		●	●	●	●

Accessories information starts on page 4-80.
Tooling information starts on page 4-100.

* Applies to Combination Layout Only.

Standard Density Plug Inserts

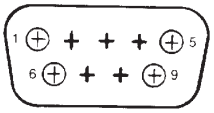

Shell Size E
(9 Position)

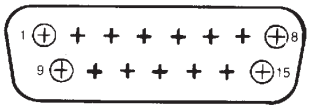

Shell Size A
(15 Position)

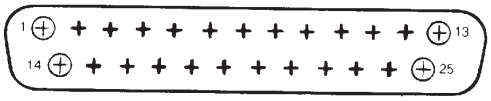

Shell Size B
(25 Position)

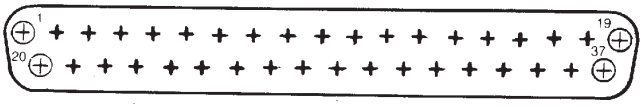

Shell Size C
(37 Position)

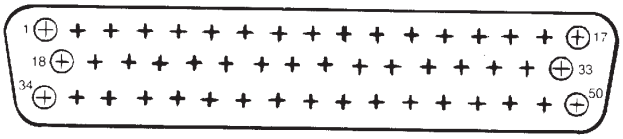

Shell Size D
(50 Position)

1.5 Density Plug Inserts

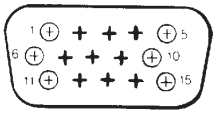

Shell Size E
(15 Position)

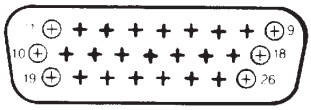

Shell Size A
(26 Position)

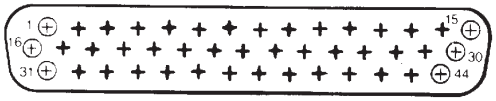

Shell Size B
(44 Position)

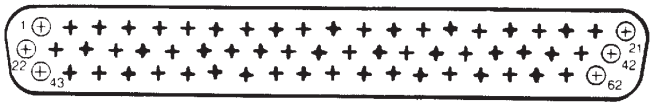

Shell Size C
(62 Position)

NOTE: Mating face of plug is shown; socket is mirror image.

Panel Mounting Specifications

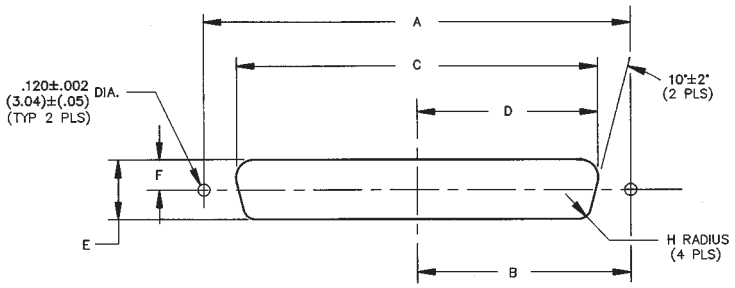

Dimensions

Shell Size	Positions	Mounting Method Front/ Rear Panel	A in	A mm	B in	B mm	C in	C mm	D in	D mm	E in	E mm	F in	F mm	H in	H mm
E	9	Front	0.98	24.89	0.49	12.45	0.87	22.10	0.44	11.18	0.51	12.95	0.26	6.60	0.08	2.03
		Rear	0.98	24.89	0.49	12.45	0.81	20.57	0.40	10.16	0.45	11.43	0.23	5.84	0.13	3.30
A	15	Front	1.31	33.27	0.66	16.76	1.10	27.94	0.60	15.24	0.51	12.95	0.26	6.60	0.08	2.03
		Rear	1.31	33.27	0.66	16.76	1.13	28.70	0.57	14.48	0.45	11.43	0.23	5.84	0.13	3.30
B	25	Front	1.85	46.99	0.93	23.62	1.74	44.20	0.87	22.10	0.51	12.95	0.26	6.60	0.08	2.03
		Rear	1.85	46.99	0.93	23.62	1.67	42.42	0.84	21.34	0.45	11.43	0.23	5.84	0.13	3.30
C	37	Front	2.50	63.50	1.25	31.75	2.39	60.71	1.20	30.48	0.51	12.95	0.26	6.60	0.08	2.03
		Rear	2.50	63.50	1.25	31.75	2.33	59.18	1.16	29.46	0.45	11.43	0.23	5.84	0.13	3.30
D	50	Front	2.41	61.21	1.20	30.48	2.30	58.42	1.15	29.21	0.62	15.75	0.31	6.60	0.08	2.03
		Rear	2.41	61.21	1.20	30.48	2.22	56.39	1.11	28.19	0.56	14.22	0.28	5.84	0.13	3.30

PANEL MOUNTING HARDWARE: Aids in alignment of plug and receptacle.

Float Bushing

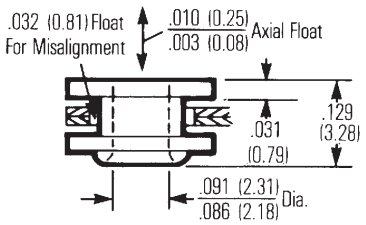

Rear panel mounting

Reverse Float Bushing

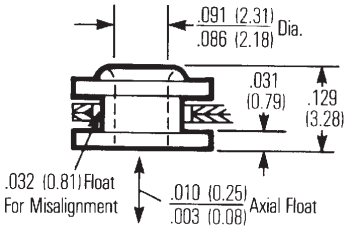

Front panel mounting

Floating Dual Bushing

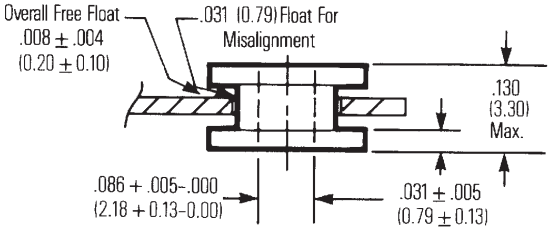

Front and rear panel mounting

4-40 Clinch Nut

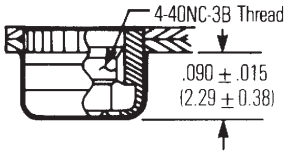

Rear panel mounting

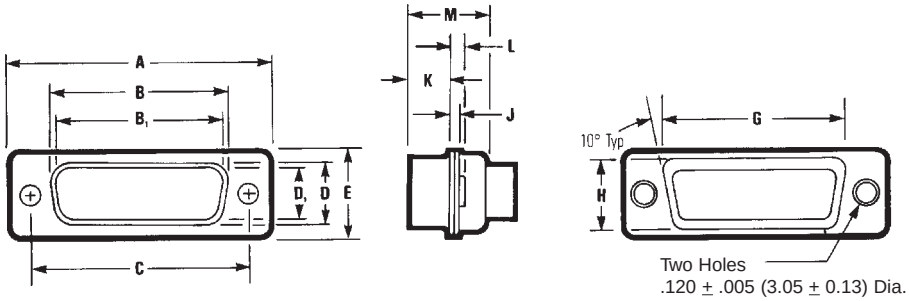

Mating Side **Termination Side**

Shell Size	Positions	Connector Type	A ±.015" (0.38mm) in	A mm	B ±.010" (0.25mm) in	B mm	B_1 ±.005" (0.13 mm) in	B_1 mm	C ±.005" (0.13mm) in	C mm	D ±.010" (0.25mm) in	D mm	D_1 ±.010" (0.25mm) in	D_1 mm	E ±.010" (0.25mm) in	E mm
E	9	Plug	1.213	30.81	--	--	.666	16.90	0.984	24.99	--	--	.329	8.40	.494	12.55
		Socket	1.213	30.81	.640	16.26	--	--	0.984	24.99	.308	7.82	--	--	.494	12.55
A	15	Plug	1.541	39.14	--	---	.994	25.30	1.312	33.32	--	---	.329	8.40	.494	12.55
		Socket	1.541	39.14	.968	24.59	--	--	1.312	33.32	.308	7.82	--	--	.494	12.55
B	25	Plug	2.088	53.04	--	--	1.534	39.00	1.852	47.04	--	--	.329	8.40	.494	12.55
		Socket	2.088	53.04	1.508	38.30	--	--	1.852	47.04	.308	7.82	--	--	.494	12.55
C	37	Plug	2.729	69.32	--	---	2.182	55.40	2.500	63.50	--	---	.329	8.40	.494	12.55
		Socket	2.729	69.32	2.156	54.76	--	--	2.500	63.50	.308	7.82	--	---	.494	12.55
D	50	Plug	2.635	66.93	--	--	2.079	52.80	2.406	61.11	--	--	.436	11.07	.605	15.37
		Socket	2.635	66.93	2.062	52.34	--	--	2.406	61.11	.420	10.67	--	--	.605	15.37

Shell Size	Positions	Connector Type	G ±.010" (0.25mm) in	G mm	H ±.010" (0.25mm) in	H mm	J ±.010" (0.25 mm) in	J mm	K ±.005" (0.25mm) in	K mm	L ±.010" (0.25mm) in	L mm	M ±.010" (0.25mm) in	M mm
E	9	Plug	.759	19.28	.422	10.72	.030	0.76	.236	5.99	.045	1.14	.422	10.72
		Socket	.759	19.28	.422	10.72	.030	0.76	.243	6.17	.045	1.14	.429	10.92
A	15	Plug	1.083	27.51	.422	10.72	.030	0.76	.236	5.99	.045	1.14	.422	10.72
		Socket	1.083	27.51	.422	10.72	.030	0.76	.253	6.17	.045	1.14	.429	10.92
B	25	Plug	1.625	41.27	.422	10.72	.039	0.99	.231	5.87	.060	1.52	.426	10.82
		Socket	1.625	41.27	.422	10.72	.030	0.76	.243	6.17	.045	1.14	.429	10.92
C	37	Plug	2.272	57.71	.422	10.72	.039	0.99	.231	5.87	.060	1.52	.426	10.82
		Socket	2.272	57.71	.422	10.72	.030	0.76	.243	6.17	.045	1.14	.429	10.92
D	50	Plug	2.178	55.32	.534	13.56	.039	0.99	.231	5.87	.060	1.52	.426	10.82
		Socket	2.178	55.32	.534	13.56	.030	0.76	.243	6.17	.045	1.14	.429	10.92

B and D are outside dimensions for socket. D and B are inside dimensions for plug.

Standard Density D-subminiature Mounting Dimensions Board Layouts Footprints (Component side shown)

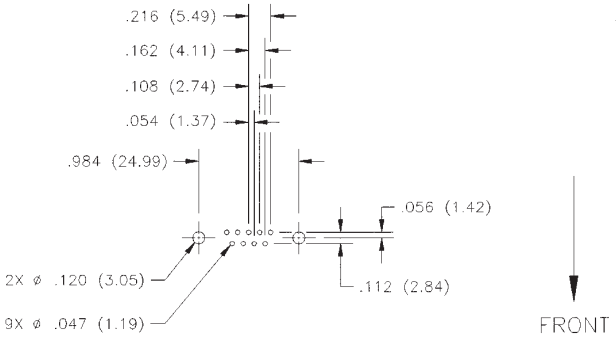

9 Position
Shell Size E

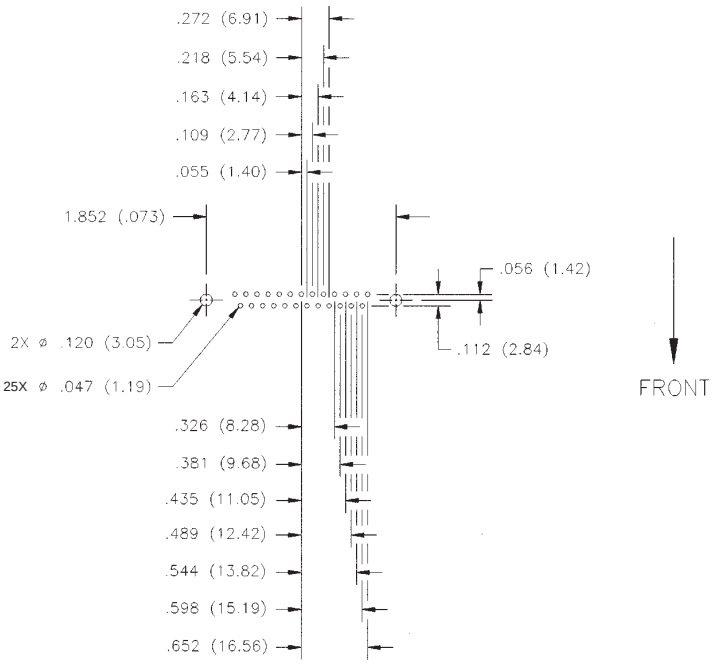

25 Position
Shell Size B

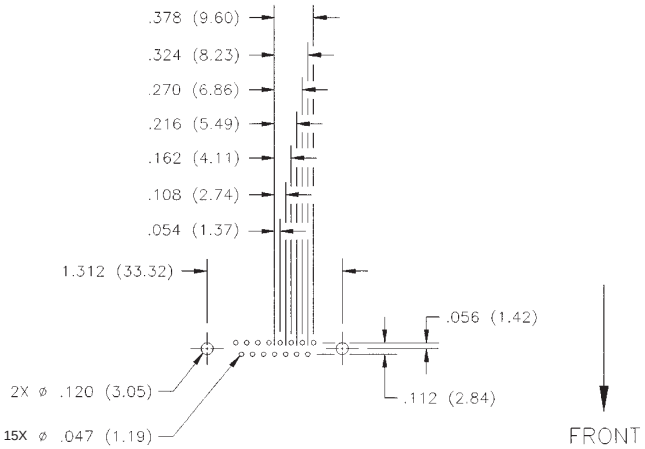

15 Position
Shell Size A

The footprints on this page are standard for all metal shell D-subminiature connectors.

On all right-angle D-subminiature connectors, the short row of contacts is positioned closest to the edge of the board.

PC Board Lead Hole Size

Terminal Dia.		Hole Dia.	
in	mm	in	mm
.040	1.02	.055	1.40
.030	0.76	.045	1.14
.024-.025	0.61-0.64	.039	0.99

Standard Density D-subminiature Mounting Dimensions Board Layouts Footprints (Component side shown)

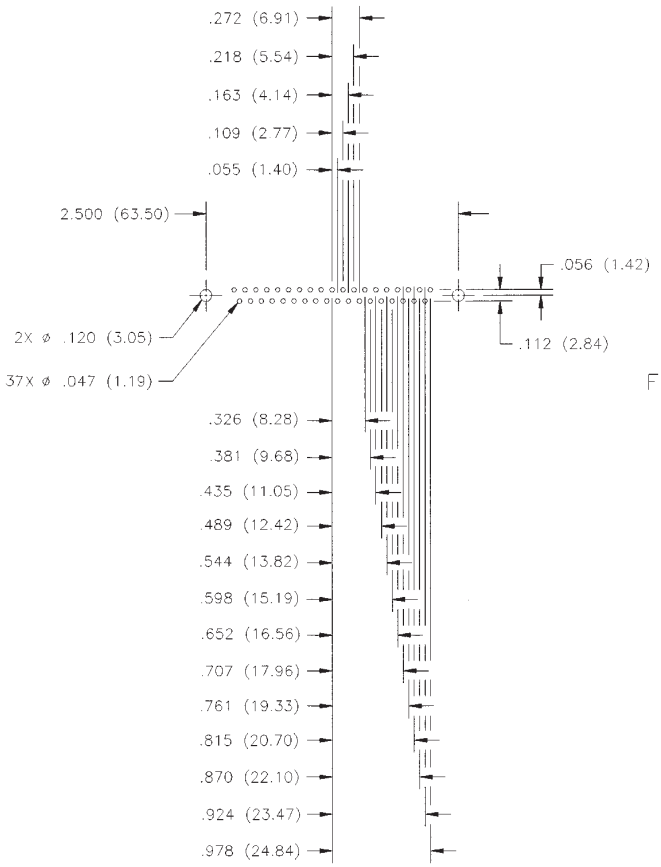

37 Position
Shell Size C

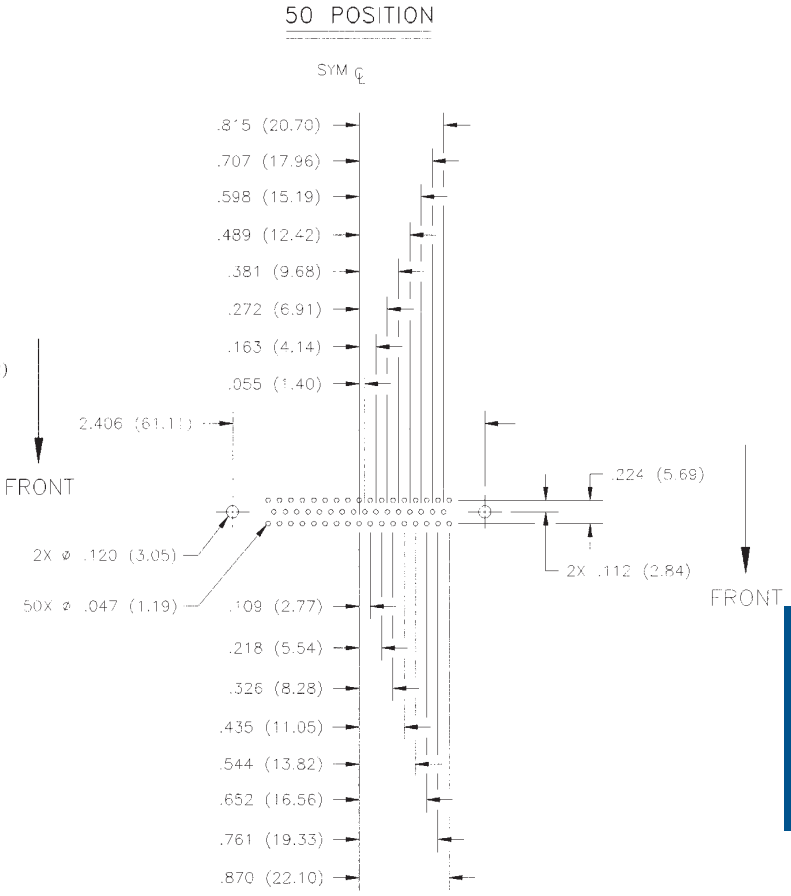

50 Position
Shell Size D

The footprints on this page are standard for all metal shell D-subminiature connectors.

On all right-angle D-subminiature connectors, the short row of contacts is positioned closest to the edge of the board.

PC Board Lead Hole Size

Terminal Dia. in	Terminal Dia. mm	Hole Dia. in	Hole Dia. mm
.040	1.02	.055	1.40
.030	0.76	.045	1.14
.024-.025	0.61-0.64	.039	0.99

1.5 Density D-subminiature Recommended PCB Layout for Footprint (Component side shown)

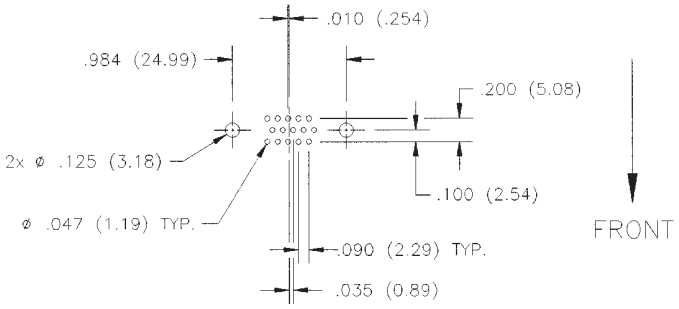

15 Position
Shell Size E

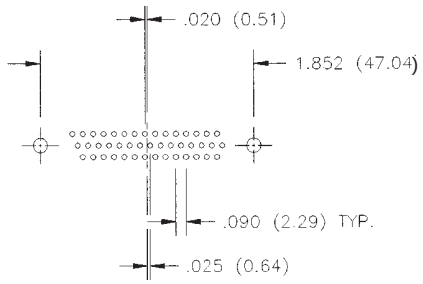

44 Position
Shell Size B

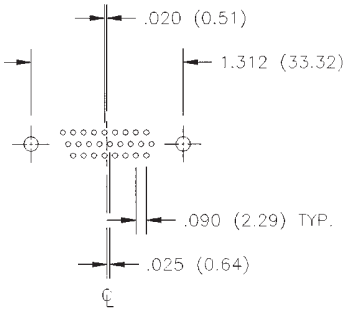

26 Position
Shell Size A

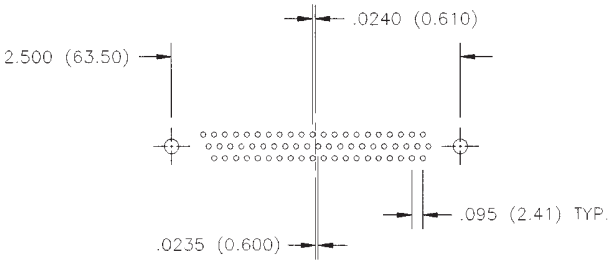

62 Position
Shell Size C

The footprints on this page are standard for all metal shell D-subminiature connectors.

On all right-angle D-subminiature connectors, the short row of contacts is positioned closest to the edge of the board.

PC Board Lead Hole Size

Terminal Dia. in	Terminal Dia. mm	Hole Dia. in	Hole Dia. mm
.040	1.02	.055	1.40
.030	0.76	.045	1.14
.024-.025	0.61-0.64	.039	0.99

D-subminiature Metal Shell Right-Angle and Vertical PCB D*KL Series

Cinch

Features

- ***Offered in right-angle or vertical PCB mount versions.***
- ***Available with gold flash or 30µin. gold plating.***
- ***Metal Shell provides grounding and shielding capability.***
- ***Approvals:***
  - ***UL Recognized: File E130965.***
  - ***CSA Approved: File LR97981.***
- ***See pages 4-5 thru 4-10 for standard dimensions, contact arrangements, and panel mounting specifications.***

Materials

Insulator Material: Glass-filled polyester (black), UL 94V-O rated
Contact Material: Socket - Phosphor bronze (stamped)
Plug - Brass (stamped)
Contact Plating: Gold flash or 30µin. gold in mating area and tin/lead on tails. All over nickel.
Metal Shell: Steel with tin plating (grounding indents on plug)

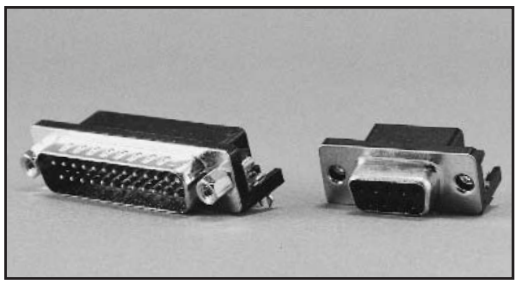

Environmental

Operating Temperature: -55°C to +125°C
Shock: 50G peak per MIL-STD-202, Method 213, Condition G
Vibration: 12 cycles in three perpendicular directions @ 10-2000Hz, per MIL-STD-202, Method 204, Condition D
Moisture Resistance: 90-95% relative humidity @ 40°C for 96 hours per MIL-STD-202, Method 103

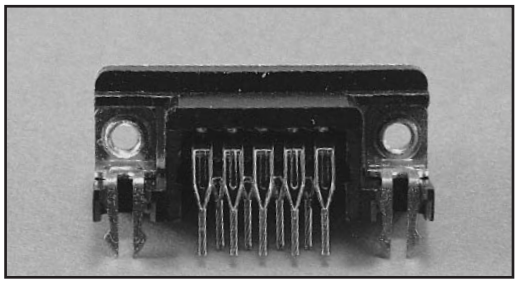

Electrical

Withstanding Voltage: Right Angle - minimum AC 1250V RMS @ sea level, Vertical - minimum AC 1000V RMS @ sea level
Current Rating: 5 Amps
Contact Resistance: 15 milliohms maximum
Insulation Resistance: 5000 megohms maximum (initial); 1000 megohms (minimum) after environmental testing

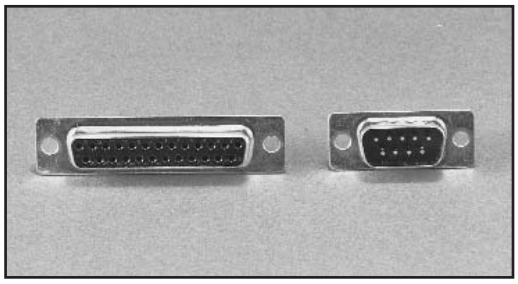

Mechanical

Individual Contact Insertion and Separation Force (minimum/maximum): 0.7 oz./12 oz.
Durability: 500 mating cycles

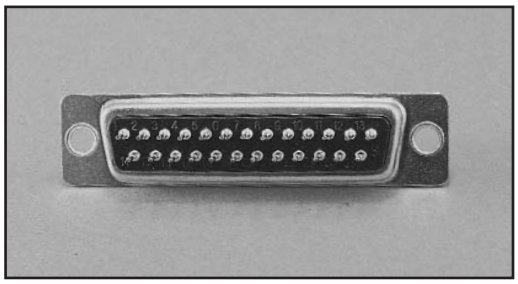

Economical D-subminiature Metal Shell Right-Angle PCB D*KL Series

Cinch

Right-Angle Connectors

- 0.318" footprint.
- Available in 9, 15, and 25 position plugs and sockets.
- Offered with 4-40 threaded inserts for secure mounting to panels or with female screwlocks.
- Boardlocks to provide mechanical hold-down during wave soldering process.

- **Materials:**
  - Boardlock: Brass with tin plating.
  - Female Screwlock: Brass with nickel plating.

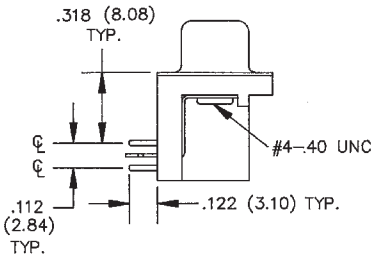

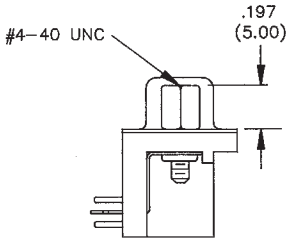

Ordering Information

Right-Angle Plugs

	4-40 Threaded Inserts		Female Screwlocks	
Size	**Gold Flash**	**30µin. Gold**	**Gold Flash**	**30µin. Gold**
9	DEKL-9PATI-E	DEKL-9PATI-E2	DEKL-9PATI-F	DEKL-9PATI-F2
15	DAKL-15PATI-E	DAKL-15PATI-E2	DAKL-15PATI-F	DAKL-15PATI-F2
25	DBKL-25PATI-E	DBKL-25PATI-E2	DBKL-25PATI-F	DBKL-25PATI-F2

Right-Angle Sockets

	4-40 Threaded Inserts		Female Screwlocks	
Size	**Gold Flash**	**30µin. Gold**	**Gold Flash**	**30µin. Gold**
9	DEKL-9SAT-E	DEKL-9SAT-E2	DEKL-9SAT-F	DEKL-9SAT-F2
15	DAKL-15SAT-E	DAKL-15SAT-E2	DAKL-15SAT-F	DAKL-15SAT-F2
25	DBKL-25SAT-E	DBKL-25SAT-E2	DBKL-25SAT-F	DBKL-25SAT-F2

- **Vertical Connectors:**
  - Available in 9, 15, 25, 37, and 50 position plugs and sockets with straight dip solder tails.
  - 0.024" contact diameter.
  - Offered with standard mounting holes.

Plug

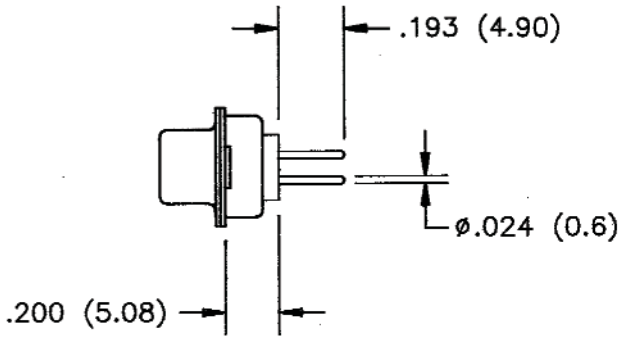

Ordering Information

4

Vertical PCB Connectors

	Plugs		Sockets	
Size	**Gold Flash**	**30µin. Gold**	**Gold Flash**	**30µin. Gold**
9	DEKL-9PUTI	DEKL-9PUTI-2	DEKL-9SUT	DEKL-9SUT-2
15	DAKL-15PUTI	DAKL-15PUTI-2	DAKL-15SUT	DAKL-15SUT-2
25	DBKL-25PUTI	DBKL-25PUTI-2	DBKL-25SUT	DBKL-25SUT-2
37	DCKL-37PUTI	DCKL-37PUTI-2	DCKL-37SUT	DCKL-37SUT-2
50	DDKL-50PUTI	DDKL-50PUTI-2	DDKL-50SUT	DDKL-50SUT-2

D-subminiature 1.5 Density Metal Shell Crimp and Poke and Right-Angle PCB HPD/HTD Series

Cinch

Features

- *1.5 Density means the connector uses small size #22 contacts for a higher pin count in a standard size shell. Also accepts standard D-subminiature accessories (hoods, backshells, etc.) per the following chart:*

Shell Size	1.5 D-sub No. of Pins	Standard D-sub No. of Pins
E	15	9
A	26	15
B	44	25
C	62	37

- *Offered in cable plugs and right-angle PCB mount sockets.*
- *Metal Shell provides grounding and shielding capability.*
- *Approvals:*
  Plugs: • UL Recognized - Files E170218 (UL1977) & E130965 (UL1863).
  • CSA Approved - File LR31996-7.
  Sockets: UL Recognized - File E170218.
- *See pages 4-5 thru 4-10 for standard dimensions, contact arrangements, and panel mounting specifications.*

Materials

Connector Shell: Steel with tin plating (grounding indents on plug)
Contact Material: Phosphor bronze (stamped)
Contact Plating:

- **Sockets:** Gold flash or 30µin. gold in mating area and tin/lead on tails. All over nickel.
- **Plugs:** Gold flash or 30µin. gold in mating area and gold flash on remainder. All over nickel.

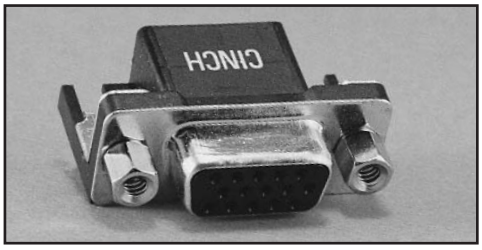

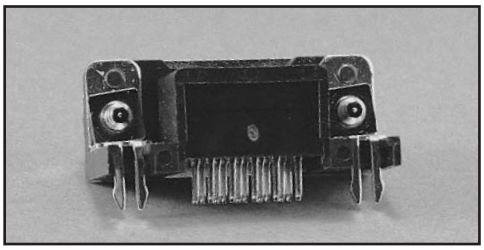

Environmental

Operating Temperature: -55°C to +125°C
Shock: 50G peak per MIL-STD-202, Method 213, Condition G
Vibration: 12 cycles in three perpendicular directions @10-2000Hz, per MIL-STD-202, Method 204, Condition D
Moisture Resistance: 90-95% relative humidity @ 40°C for 96 hours per MIL-STD-202, Method 103

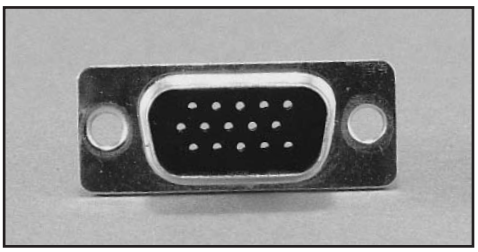

Electrical

Withstanding Voltage:	Minimum 1000V RMS @ sea level
Current Rating:	3 Amps
Contact Resistance:	15 milliohms maximum
Insulation Resistance:	5000 megohms maximum (initial); 1000 megohms (minimum) after environmental testing

Mechanical

Individual Contact Insertion and Separation Force (minimum/maximum): 0.7 oz./12 oz.
Durability:

- **Plugs** - 200 mating cycles
- **Sockets** - 200 mating cycles

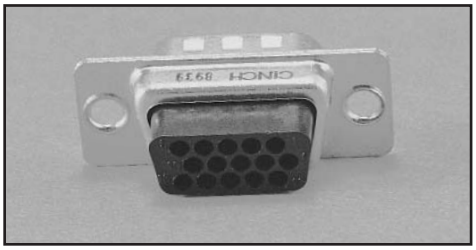

D-subminiature 1.5 Density Metal Shell Crimp and Poke Plugs HTD Series

Cinch

Connectors:

- Offered with .120 mounting holes.
- Shells offered with tin plating and grounding indents.
- These connectors are designed to accommodate one repair cycle.

Contacts: (Not included with connectors, order separately)

- Available with gold-flash plating or 30µin. gold.
- Crimp and Poke versions are offered in reels of 15,000 or 300 contacts.
- Solder and Poke contacts are packed loose.
- Will accommodate 22-30 AWG wire.
- Order contacts separately. See page 4-18.

Termination Tooling:

- Semi-automatic Stripper Crimper Tool for 15,000 reels: #HTD-518. See page 4-102.
- Crimp Contact Hand Tool for 300-piece reels: #HTD-266. See page 4-101.
- Semi-automatic Hand Crimping Tool for individual contact termination: #HTD-544. See page 4-101.
- Contact Insertion/Extraction Tool: Cinch #CIET-22-DF. See page 4-101.

Materials:

- Insulator Material: Black UL 94 V-0 glass-filled nylon.

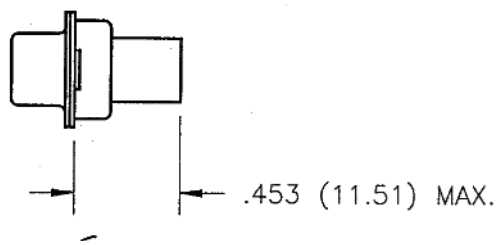

Ordering Information

HTD Series 1. 5 Density Crimp and Poke Plug Connectors

Size	Shell Size	Catalog Number
15	E	HTDE-15PTI-FO
26	A	HTDA-26PTI-FO
44	B	HTDB-44PTI-FO
62	C	HTDC-62PTI-FO

- Use with HTD Series 1.5 D-Sub Crimp and Poke connectors and overmold kits.
- All Crimp and Poke contacts are on right-hand feed reels.

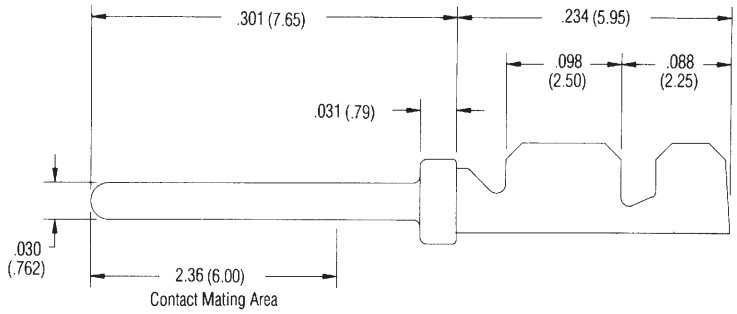

Crimp and Poke Plug Contact

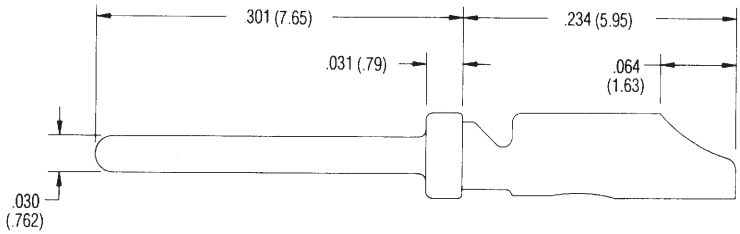

Solder and Poke Plug

Ordering Information

HTD Series 1. 5 D-sub Male Crimp and Poke and Solder and Poke Contacts

Type of Packing	Crimp and Poke 15,000 Reel		Crimp and Poke 300 Reel		Solder and Poke Loose	
Plating	Gold Flash	30µin. Gold	Gold Flash	30µin. Gold	Gold Flash	30µin. Gold
Pin	HTD-CP-9-15000	HTD-CP-1-15000	HTD-CP-9-300	HTD-CP-1-300	HTD-SP-9-10	Not Available

D-subminiature 1.5 Density Metal Shell Right-Angle PCB Sockets HPD Series

Cinch

- .350" footprint.
- Offered with fixed 4-40 threaded inserts for secure mounting to panels or with assembled female screwlocks.
- Boardlocks to maintain electrical continuity between shell and PC board ground and provide mechanical hold-down during wave soldering process.
- Available in standard configuration sockets, sizes 15, 26, 44, and 62 with black insulator.
- 15 position socket also available with royal blue insulator in Windows '95® configuration with Pin #9 recessed 0.050".

Materials:

- Insulator Material: Glass-filled polyester (standard configuration - black, -9R configuration - blue), UL 94V-0 rated.
- Boardlock: Brass with tin plating.
- Female Screwlock: Brass with Nickel plating.

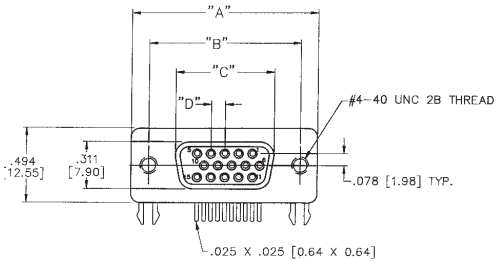

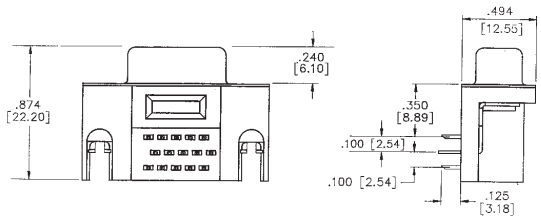

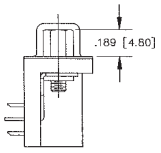

WITH #4-40 FEMALE SCREWLOCKS (ASSEMBLED)

Dimensions

Positions	A ±.015 (±0.038) in	A mm	B ±.010 (±0.25) in	B mm	C ±.010 (±0.25) in	C mm	D in	D mm
15	1.214	30.84	0.984	24.99	0.640	16.26	0.090	2.29
26	1.545	39.24	1.312	33.32	0.967	24.56	0.090	2.29
44	2.088	53.04	1.852	47.04	1.508	38.30	0.090	2.29
62	2.730	69.34	2.500	63.50	2.156	54.76	0.095	2.41

Ordering Information

HPD Series 1.5 Density Right-Angle Socket Connectors

	Shell			4-40 Threaded Inserts		Female Screwlocks	
Size	Size	Type	Color	Gold Flash	30µin. Gold	Gold Flash	30µin. Gold
15	E	Standard	Black	HPDEB-15SAT-E	HPDEB-15SAT-E2	HPDEB-15SAT-F	HPDEB-15SAT-F2
26	A	Standard	Black	HPDAB-26SAT-E	HPDAB-26SAT-E2	HPDAB-26SAT-F	HPDAB-26SAT-F2
44	B	Standard	Black	HPDBB-44SAT-E	HPDBB-44SAT-E2	HPDBB-44SAT-F	HPDBB-44SAT-F2
62	C	Standard	Black	HPDCB-62SAT-E	HPDCB-62SAT-E2	HPDCB-62SAT-F	HPDCB-62SAT-F2
15	E	Windows '95®	Blue	HPDEB-15SAT-E-9R	HPDEB-15SAT-E2-9R	HPDEB-15SAT-F-9R	HPDEB-15SATF2-9R

Windows '95 is a registered trademark of Microsoft.

D-subminiature Metal Shell
Crimp and Poke
D*A Series

Cinch

Features

- ***Offered in 9, 15 , 25, 37, and 50 position plugs and sockets.***
- ***Contacts:***
  - ***Available with gold flash or 30µin. gold plating.***
  - ***Offered in 15,000 contact reel or 300 contact reel, or in loose-piece bags of 100 or 1000 each.***
  - ***Accommodate 20-24 AWG wire or 26-30 AWG wire.***
  - ***Not included with connector - order stamped contacts separately.***
- ***Approvals:***
  - ***UL Recognized - Files E170218 (UL1977) and E130965 (UL1863).***
  - ***CSA Approved - File LR31996.***
- ***See pages 4-5 thru 4-10 for standard dimensions, contact arrangements, and panel mounting specifications.***

Materials

Insulator Material: Glass-filled nylon (black), UL 94 V-O rated
Connector Shell: Steel with zinc plating and yellow chromate finish or tin plating (plug has grounding indents)
Contact Material:
- Plug - Brass (stamped)
- Socket - Phosphor bronze (stamped)

Contact Plating: Gold flash or 30µin. gold in mating area and gold flash on the remainder. All over nickel.
4-40 Clinch Nut: Steel with cadmium plating and yellow chromate finish
Dual Float Bushing: Stainless steel, passivated

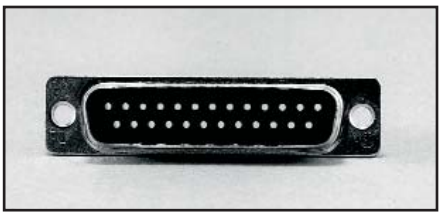

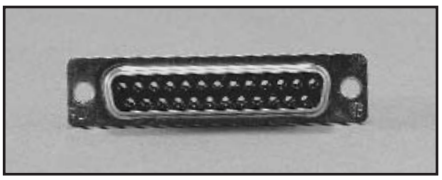

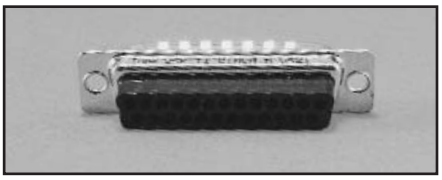

Environmental

Operating Temperature: -65°C to + 125°C
Shock: 50G peak per MIL-STD-202, Method 213, Condition G
Vibration: 12 cycles in three perpendicular directions @ 10-2000Hz, per MIL-STD-202, Method 204, Condition D
Moisture Resistance: 90-95% relative humidity @ 40°C for 96 hours per MIL-STD-202, Method 103

Electrical

Withstanding Voltage:	Minimum 1000V RMS @ sea level
Current Rating:	5 Amps
Contact Resistance:	2.7 milliohms maximum
Insulation Resistance:	5000 megohms maximum (initial); 1000 megohms (minimum) after environmental testing

Mechanical

Individual Contact Insertion and Separation Force (minimum/maximum): 0.7 oz./12 oz.
Durability: 500 mating cycles

- Offered with .120 mounting holes or 4-40 clinch nuts.

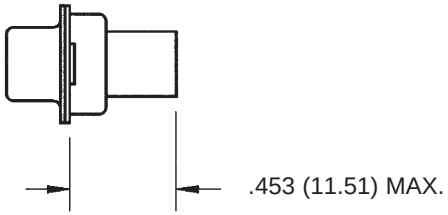

Termination Tools

- Semi-Automatic Stripper Crimper Tool for 15K reels: #GSC-20-30. See page 4-102.
- Contact Insertion/Extraction Tool: #CIET-20-HDB. See page 4-101.
- Crimp Contact Hand Tool for 300-piece reels: #GHC-B (20-26 AWG wire) or Catalog #GHC-B1 (28-30 AWG wire). See page 4-101.
- Crimp Contact Hand Tool for loose piece contacts: #HTD-544. See page 4-101.

Ordering Information

D*A Series Crimp and Poke Connectors - Plugs

	Zinc-plated shell with yellow chromate finish		Tin-plated shell with grounding indents	
Positions	**Mounting Holes**	**4-40 Clinch Nuts**	**Mounting Holes**	**4-40 Clinch Nuts**
9	DEA-9P-FO	DEAE-9P-FO	DEA-9PTI-FO	DEAE-9PTI-FO
15	DAA-15P-FO	DAAE-15P-FO	DAA-15PTI-FO	DAAE-15PTI-FO
25	DBA-25P-FO	DBAE-25P-FO	DBA-25PTI-FO	DBAE-25PTI-FO
37	DCA-37P-FO	DCAE-37P-FO	DCA-37PTI-FO	DCAE-37PTI-FO
50	DDA-50P-FO	DDAE-50P-FO	DDA-50PTI-FO	DDAE-50PTI-FO

D*A Series Crimp and Poke Connectors - Sockets

	Zinc-plated shell with yellow chromate finish		Tin-plated shell	
Positions	**Mounting Holes**	**4-40 Clinch Nuts**	**Mounting Holes**	**4-40 Clinch Nuts**
9	DEA-9S-FO	DEAE-9S-FO	DEA-9ST-FO	DEAE-9ST-FO
15	DAA-15S-FO	DAAE-15S-FO	DAA-15ST-FO	DAAE-15ST-FO
25	DBA-25S-FO	DBAE-25S-FO	DBA-25ST-FO	DBAE-25ST-FO
37	DCA-37S-FO	DCAE-37S-FO	DCA-37ST-FO	DCAE-37ST-FO
50	DDA-50S-FO	DDAE-50S-FO	DDA-50ST-FO	DDAE-50ST-FO

Contacts

Pin

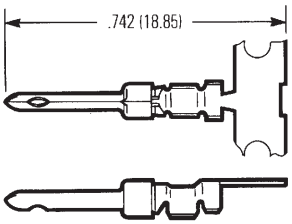

Socket

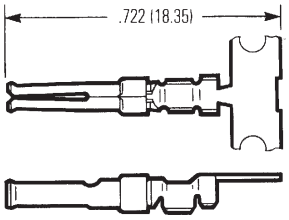

Ordering Information

D*A Series Crimp and Poke Contacts on Reels

Contacts per Reel	15,000		15,000		300		300	
Wire Gauge	20-24 AWG		26-30 AWG		20-24 AWG		26-30 AWG	
Plating	Gold Flash	30µin. Gold	Gold Flash	30µin. Gold	Gold Flash	30µin. Gold	Gold Flash	30µin. Gold
Pin	DGP-15-1	DGP-15-2	DGP-15-3	DGP-15-4	DGP-3-1	DGP-3-2	DGP-3-3	DGP-3-4
Socket	DGS-15-1	DGS-15-2	DGS-15-3	DGS-15-4	DGS-3-1	DGS-3-2	DGS-3-3	DGS-3-4

4

D*A Series Crimp and Poke Loose-Piece Contacts

Contacts per Bag	100		100		1000		1000	
Wire Gauge	20-24 AWG		26-30 AWG		20-24 AWG		26-30 AWG	
Plating	Gold Flash	30µin Gold	Gold Flash	30µin Gold	Gold Flash	30µin. Gold	Gold Flash	30µin. Gold
Pin	DGP-100L-1	DGP-100L-2	DGP-100L-3	DGP-100L-4	DGP-1000L-1	DGP-1000L-2	DGP-1000L-3	DGP-100L-4
Socket	DGS-100L-1	DGS-100L-2	DGS-100L-3	DGS-100L-4	DGS-1000L-1	DGS-1000L-2	DGS-1000L-3	DGS-100L-4

D-subminiature Metal Shell Overmold Kits D*A and HTD Series

Cinch

Features

- *Cinch overmold kits enable you to overmold the connector of the cable assembly for less material and process cost (versus a metal backshell), improved appearance, and improved shielding of the connector to help meet RFI/EMI requirements.*
- *An Overmold Kit catalog number consists of:*
  - *D*A or HTD Crimp and Poke connector.*
  - *Inside shielding cover.*
  - *Outside shielding cover.*
- *You will also need to order the following:*
  - *Crimp and Poke stamped contacts must be ordered separately on page 4-22 for D*A and page 4-18 for HTD connectors.*
  - *Ferrules are required, but must be ordered separately according to the size necessary to accommodate the wire. See page 4-25.*
  - *Termination tooling is required to crimp the wires on the connector.*
  - *A hand tool and appropriate crimping die are required for crimping the ferrule.*
- *All specifications on the connector portion of the overmold kit can be found on pages 4-16 thru 4-17 for HPD 1.5 density and pages 4-20 thru 4-21 for D*A series.*

Materials

Shield Covers: Steel (stamped) with tin/lead finish
Ferrule: Brass

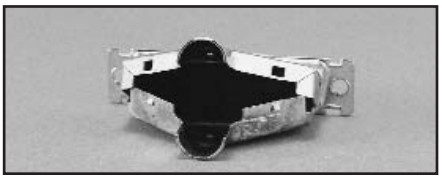

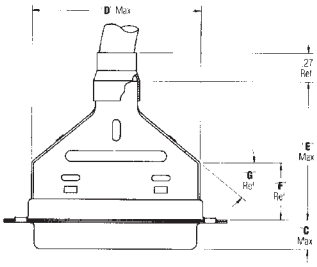

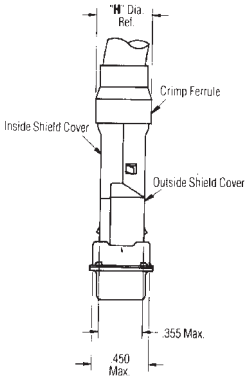

Dimensions

Overmold Shielding Kits

	C		D		E		F		G	H	
Positions	**in**	**mm**	**in**	**mm**	**in**	**mm**	**in**	**mm**	**Deg.**	**in**	**mm**
9 Plug	0.270	6.86	0.705	17.91	1.320	33.53	0.520	13.21	75°	0.440	11.18
9 Socket	0.285	7.24	0.705	17.91	1.320	33.53	0.520	13.21	75°	0.440	11.18
15 Plug	0.270	6.86	1.050	26.67	1.320	33.53	0.520	13.21	58°	0.440	11.18
15 Socket	0.285	7.24	1.050	26.67	1.320	33.53	0.520	13.21	58°	0.440	11.18
25 Plug	0.275	6.99	1.590	40.39	1.320	33.53	0.520	13.21	40°	0.440	11.18
25 Socket	0.285	7.24	1.590	40.39	1.320	33.53	0.520	13.21	40°	0.440	11.18
37 Plug	0.275	6.99	2.240	56.90	1.620	41.15	0.750	19.05	32°	0.520	13.21
37 Socket	0.285	7.24	2.240	56.90	1.620	41.15	0.750	19.05	32°	0.520	13.21

Overmold Kits (Cont'd)

Ordering Information

D*A Series Crimp and Poke Overmold Kits

Positions	Tin-plated shell Plugs	Tin-plated shell Sockets
9	DEAO-9PTI-FO1	DEAO-9ST-FO1
15	DAAO-15PTI-FO1	DAAO-15ST-FO1
25	DBAO-25PTI-FO1	DBAO-25ST-FO1
37	DCAO-37PTI-FO1	DCAO-37ST-FO1

HTD Series 1. 5 Density Plugs Overmold Kits

Size	Shell Size	Catalog Number
15	E	HTDEO-15PTI-FO1
26	A	HTDAO-26PTI-FO1
44	B	HTDBO-44PTI-FO1

Crimp Ferrule

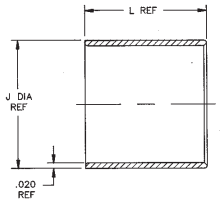

TYPE 2

Ordering Information

Catalog Number	Type	J in	J mm	K in	K mm	L in	L mm	Crimp Die Catalog No.
CF-51	1	.437	11.10	.200	5.08	.450	11.43	CD-07
CF-42	1	.437	11.10	.235	5.97	.450	11.43	CD-00
CF-43	1	.437	11.10	.250	6.35	.450	11.43	CD-01
CF-44	1	.437	11.10	.325	8.26	.450	11.43	CD-02
CF-45	1	.437	11.10	.350	8.89	.450	11.43	CD-03
CF-46	1	.437	11.10	375	9.53	.450	11.43	CD-04
CF-47	2	.437	11.10	.437	11.10	.450	11.43	CD-05
CF-50	2	.460	11.68	.460	11.68	.450	11.43	CD-06

- Pneumatic Bench Top Press for Crimping Ferrules #FCT-551. See page 4-103.
- Hand Tool for Crimping Ferrules #FCT-552. See page 4-103.

D-subminiature Metal Shell
Crimp and Poke, Right-Angle and Vertical PCB
D*U Series

Cinch

Features

- ***Offered in 9, 15, 25, 37, and 50 position plugs and sockets (except right-angle PCB connectors-9 , 15, and 25 positions).***
- ***Available with gold flash or 30µin. gold plating.***
- ***Offered with .120 mounting holes, optional 4-40 clinch nuts, or dual float bushings (except right-angle PCB connectors-mounting holes only).***
- ***Approvals:***
  - ***UL Recognized - Files E170218 (UL1977) and E130965 (UL1863).***
  - ***CSA Approved - File LR31996.***
- ***See pages 4-5 thru 4-10 for standard dimensions, contact arrangements, and panel mounting specifications.***

Materials

Insulator Material: Glass-filled nylon (black), UL 94 V-O rated

Connector Shell: Steel with zinc plating and yellow chromate finish or tin plating (grounding indents on plug)

4-40 Clinch Nut: Steel with cadmium plating and yellow chromate finish

Dual Float Bushing: Stainless steel, passivated

Environmental

Operating Temperature: -65°C to + 125°C

Shock: 50G peak per MIL-STD-202, Method 213, Condition G

Vibration: 12 cycles in three perpendicular directions @ 10-2000Hz, per MIL-STD-202, Method 204, Condition D

Moisture Resistance: 90-95% relative humidity @ 40°C for 96 hours per MIL-STD-202, Method 103

Electrical

Withstanding Voltage: Minimum 1000V RMS @ sea level

Current Rating: 5 Amps

Contact Resistance: 2.7 milliohms maximum

Insulation Resistance: 5000 megohms maximum (initial); 1000 megohms (minimum) after environmental testing

Mechanical

Individual Contact Insertion and Separation Force (minimum/maximum): 0.7 oz./12 oz.

Durability: 500 mating cycles

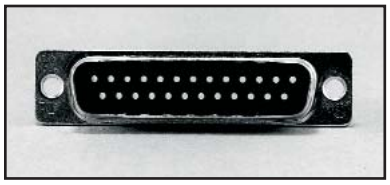

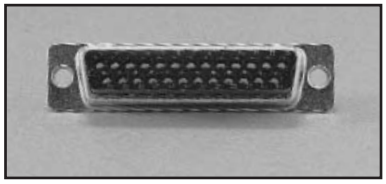

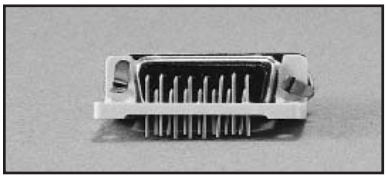

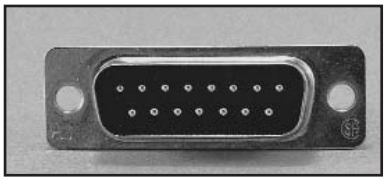

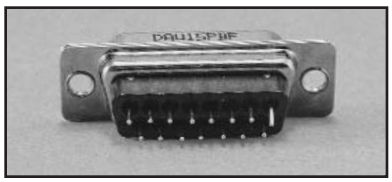

- Machined contacts supplied loose with connector or can be ordered separately. Use with 20-24 AWG wire.
- Stamped Contacts (order separately) for use when ordering connector with contacts not included (-FO option). Use with 20-28 AWG wire.
  - Available in 10K reel.
  - Order reels of stamped contacts separately.

Materials

- Contact Material: Plug - Brass (stamped) or copper alloy (machined). Socket - Phosphor bronze (stamped) or copper alloy (machined).

- Contact Plating:
  - Stamped Plugs and Sockets: Gold flash or 30µin. gold and gold flash on the remainder. All over nickel.
  - Machined Plugs and Sockets: Gold flash or 30µin. gold. All over nickel.

Termination Tooling

- Semi-Automatic Stripper Crimper for Stamped Contacts on 10K PC reels: #ESC-20-3. See page 4-102.
- Contact Insertion/Extraction: #CIET-20-HDB. See page 4-101.
- Loose Contact Crimp Tool:

  Machined Contact - #M22520/2-01. See page 4-103.

  For Positioner as required see page 4-103.

  Stamped Contacts #BT-20-HC see page 4-101.

  No positioner required.

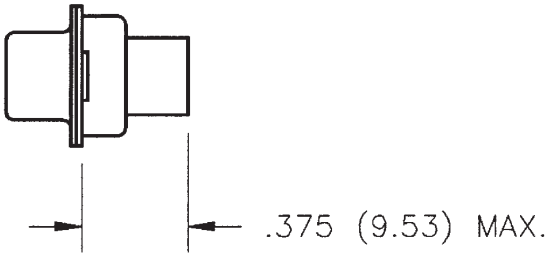

Ordering Information

D*U Crimp and Poke Plugs

Zinc-Plated Shell with Yellow Chromate Finish

	Mounting Holes		4-40 Clinch Nuts		Dual Float Bushings	
Position	Contacts Included	Without Contacts	Contacts Included	Without Contacts	Contacts Included	Without Contacts
9	DEU-9P	DEU-9P-FO	DEUE-9-P	DEUE-9P-FO	DEUY-9P	DEUY-9P-FO
15	DAU-15P	DAU-15P-FO	DAUE-15-P	DAUE-15-P-FO	DAUY-15P	DAUY-15P-FO
25	DBU-25P	DBU-25P-FO	DBUE-25-P	DBUE-25P-FO	DBUY-25P	DBUY-25P-FO
37	DCU-37P	DCU-37P-FO	DCUE-37-P	DCUE-37P-FO	DCUY-37P	DCUY-37P-FO
50	DDU-50P	DDU-50P-FO	DDUE-50-P	DDUE-50P-FO	DDUY-50P	DDUY-50P-FO

Tin-Plated Shell with Grounding Indents

	Mounting Holes		4-40 Clinch Nuts		Dual Float Bushings	
Position	Contacts Included	Without Contacts	Contacts Included	Without Contacts	Contacts Included	Without Contacts
9	DEU-9PTI	DEU-9PTI-FO	DEUE-9PTI	DEUE-9PTI-FO	DEUY-9PTI	DEUY-9PTI-FO
15	DAU-15PTI	DAU-15PTI-FO	DAUE-15PTI	DAUE-15PTI-FO	DAUY-15PTI	DAUY-15PTI-FO
25	DBU-25PTI	DBU-25PTI-FO	DBUE-25PTI	DBUE-25PTI-FO	DBUY-25PTI	DBUY-25PTI-FO
37	DCU-37PTI	DCU-37PTI-FO	DCUE-37PTI	DCUE-37PTI-FO	DCUY-37PTI	DCUY-37PTI-FO
50	DDU-50PTI	DDU-50PTI-FO	DDUE-50PTI	DDUE-50PTI-FO	DDUY-50PTI	DDUY-50PTI-FO

D*U Crimp and Poke Sockets

Zinc-Plated Shell with Yellow Chromate Finish

	Mounting Holes		4-40 Clinch Nuts		Dual Float Bushings	
Position	Contacts Included	Without Contacts	Contacts Included	Without Contacts	Contacts Included	Without Contacts
9	DEU-9S	DEU-9S-FO	DEUE-9S	DEUE-9S-FO	DEUY-9S	DEUY-9S-FO
15	DAU-15S	DAU-15S-FO	DAUE-15S	DAUE-15S-FO	DAUY-15S	DAUY-15S-FO
25	DBU-25S	DBU-25S-FO	DBUE-25S	DBUE-25S-FO	DBUY-25S	DBUY-25S-FO
37	DCU-37S	DCU-37S-FO	DCUE-37S	DCUE-37S-FO	DCUY-37S	DCUY-37S-FO
50	DDU-50S	DDU-50S-FO	DDUE-50S	DDUE-50S-FO	DDUY-50S	DDUY-50S-FO

Tin-Plated Shell

	Mounting Holes		4-40 Clinch Nuts		Dual Float Bushings	
Position	Contacts Included	Without Contacts	Contacts Included	Without Contacts	Contacts Included	Without Contacts
9	DEU-9ST	DEU-9ST-FO	DEUE-9ST	DEUE-9ST-FO	DEUY-9ST	DEUY-9ST-FO
15	DAU-15ST	DAU-15ST-FO	DAUE-15ST	DAUE-15ST-FO	DAUY-15ST	DAUY-15ST-FO
25	DBU-25ST	DBU-25ST-FO	DBUE-25ST	DBUE-25ST-FO	DBUY-25ST	DBUY-25ST-FO
37	DCU-37ST	DCU-37ST-FO	DCUE-37ST	DCUE-37ST-FO	DCUY-37ST	DCUY-37ST-FO
50	DDU-50ST	DDU-50ST-FO	DDUE-50ST	DDUE-50ST-FO	DDUY-50ST	DDUY-50ST-FO

Machined Contacts • 20-24 AWG Wire

Plug **Socket**

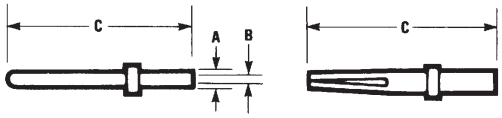

Dimensions

	Wire	A		B		C Max.	
Description	**AWG**	**in**	**mm**	**in**	**mm**	**in**	**mm**
Pin	#20, 22, 24	.066	1.67	.045	1.14	.537	13.64
Socket	#20, 22, 24	.066	1.67	.045	1.14	.523	13.28

Ordering Information

D*U Series Loose-Piece Machined Contacts

	Gold Flash	30µin. Gold
Pin	030-1952-000	030-1952-030
Socket	030-1953-000	030-1953-030

Stamped Contacts • 20-28 AWG Wire

Plug **Socket**

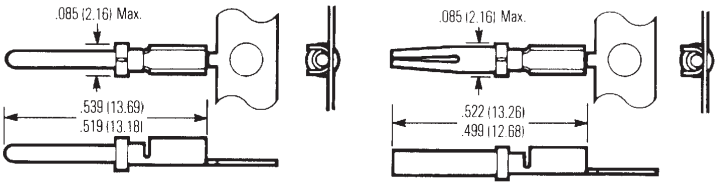

Ordering Information

D*U Series Stamped Contacts on 10K Reels

	Gold Flash	30µin. Gold
Pin	BCL-1964-20P	D110238-034
Socket	BCL-1963-20S	D110238-035

- .445" footprint.
- .024" contact diameter.

Materials

- Contact Material: Socket - Copper alloy (machined), Plug - Brass (machined).
- Contact Plating: Gold flash or 30µin. gold. All over nickel.
- Mounting bracket: Black nylon. Can be removed if necessary.

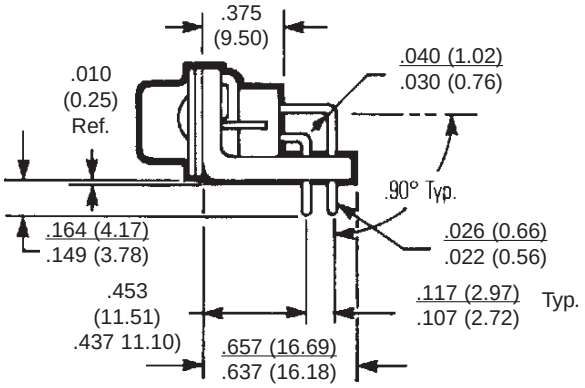

Ordering Information

D*U Right-Angle Plugs

	Zinc-Plated Shell with Yellow Chromate Finish		Tin-Plated Shell with Grounding Indents	
Positions	Gold Flash	30µin. Gold	Gold Flash	30µin. Gold
9	DEU-9PAD	DEU-9PAD-30	DEU-9PADTI	DEU-9PADTI-30
15	DAU-15PAD	DAU-15PAD-30	DAU-15PADTI	DAU-15PADTI-30
25	DBU-25PAD	DBU-25PAD-30	DBU-25PADTI	DBU-25PADTI-30

D*U Right-Angle Sockets

	Zinc-Plated Shell with Yellow Chromate Finish		Tin-Plated Shell	
Positions	Gold Flash	30µin. Gold	Gold Flash	30µin. Gold
9	DEU-9SAD	DEU-9SAD-30	DEU-9SADT	DEU-9SADT-30
15	DAU-15SAD	DAU-15SAD-30	DAU-15SADT	DAU-15SADT-30
25	DBU-25SAD	DBU-25SAD-30	DBU-25SADT	DBU-25SADT-30

- .024" contact diameter.
- Longer rear insulator provides integral standoff from PCB.

Materials

- Contact Material: Plug - Brass (machined), Socket - Copper alloy (machined).
- Contact Plating: Gold flash or 30µin. gold. All over nickel.

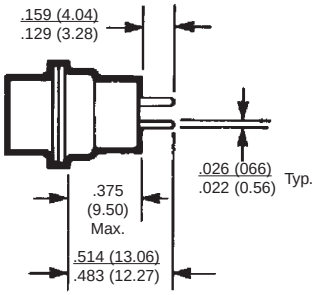

Ordering Information

Vertical Plugs

Zinc-Plated Shell with Yellow Chromate Finish

	Mounting Holes		4-40 Clinch Nuts		Dual Float Bushings	
Positions	Gold Flash	30µin. Gold	Gold Flash	30µin. Gold	Gold Flash	30µin. Gold
9	DEU-9PBF	DEU-9PBF-30	DEUE-9PBF	DEUE-9PBF-30	DEUY-9PBF	DEUY-9PBF-30
15	DAU-15PBF	DAU-15PBF-30	DAUE-15PBF	DAUE-15PBF-30	DAUY-15PBF	DAUY-15PBF-30
25	DBU-25PBF	DBU-25PBF-30	DBUE-25PBF	DBUE-25PBF-30	DBUY-25PBF	DBUY-25PBF-30
37	DCU-37PBF	DCU-37PBF-30	DCUE-37PBF	DCUE-37PBF-30	DCUY-37PBF	DCUY-37PBF-30
50	DDU-50PBF	DDU-50PBF-30	DDUE-50PBF	DDUE-50PBF-30	DDUY-50PBF	DDUY-50PBF-30

Tin-Plated Shell with Grounding Indents

	Mounting Holes		4-40 Clinch Nuts		Dual Float Bushings	
Positions	Gold Flash	30µin. Gold	Gold Flash	30µin. Gold	Gold Flash	30µin. Gold
9	DEU-9PBFTI	DEU-9PBFTI-30	DEUE-9PBFTI	DEUE-9PBFTI-30	DEUY-9PBFTI	DEUY-9PBFTI-30
15	DAU-15PBFTI	DAU-15PBFTI-30	DAUE-15PBFTI	DAUE-15PBFTI-30	DAUY-15PBFTI	DAUY-15PBFTI-30
25	DBU-25PBFTI	DBU-25PBFTI-30	DBUE-25PBFTI	DBUE-25PBFTI-30	DBUY-25PBFTI	DBUY-25PBFTI-30
37	DCU-37PBFTI	DCU-37PBFTI-30	DCUE-37PBFTI	DCUE-37PBFTI-30	DCUY-37PBFTI	DCUY-37PBFTI-30
50	DDU-50PBFTI	DDU-50PBFTI-30	DDUE-50PBFTI	DDUE-50PBFTI-30	DDUY-50PBFTI	DDUY-50PBFTI-30

Ordering Information (Cont'd)

Vertical Sockets

Zinc-Plated Shell with Yellow Chromate Finish

	Mounting Holes		4-40 Clinch Nuts		Dual Float Bushings	
Positions	Gold Flash	30µin. Gold	Gold Flash	30µin. Gold	Gold Flash	30µin. Gold
9	DEU-9SBF	DEU-9SBF-30	DEUE-9SBF	DEUE-9SBF-30	DEUY-9SBF	DEUY-9SBF-30
15	DAU-15SBF	DAU-15SBF-30	DAUE-15SBF	DAUE-15SBF-30	DAUY-15SBF	DAUY-15SBF-30
25	DBU-25SBF	DBU-25SBF-30	DBUE-25SBF	DBUE-25SBF-30	DBUY-25SBF	DBUY-25SBF-30
37	DCU-37SBF	DCU-37SBF-30	DCUE-37SBF	DCUE-37SBF-30	DCUY-37SBF	DCUY-37SBF-30
50	DDU-50SBF	DDU-50SBF-30	DDUE-50SBF	DDUE-50SBF-30	DDUY-50SBF	DDUY-50SBF-30

Tin-Plated Shell

	Mounting Holes		4-40 Clinch Nuts		Dual Float Bushings	
Positions	Gold Flash	30µin. Gold	Gold Flash	30µin. Gold	Gold Flash	30µin. Gold
9	DEU-9SBFT	DEU-9SBFT-30	DEUE-9SBFT	DEUE-9SBFT-30	DEUY-9SBFT	DEUY-9SBFT-30
15	DAU-15SBFT	DAU-15SBFT-30	DAUE-15SBFT	DAUE-15SBFT-30	DAUY-15SBFT	DAUY-15SBFT-30
25	DBU-25SBFT	DBU-25SBFT-30	DBUE-25SBFT	DBUE-25SBFT-30	DBUY-25SBFT	DBUY-25SBFT-30
37	DCU-37SBFT	DCU-37SBFT-30	DCUE-37SBFT	DCUE-37SBFT-30	DCUY-37SBFT	DCUY-37SBFT-30
50	DDU-50SBFT	DDU-50SBFT-30	DDUE-50SBFT	DDUE-50SBFT-30	DDUY-50SBFT	DDUY-50SBFT-30

D-subminiature Metal Shell and All Plastic Solder Cup and IDC
T* Series

Cinch

Features

- ***Offered in 9, 15, 25, and 37 position plugs and sockets.***
- ***Available in Solder Cup and IDC (insulation displacement) terminations for discrete wire.***
- ***Offered with .120 mounting holes.***
- ***Approvals:***
  - ***UL Recognized - Files E170218 (UL1977) and E130965 (UL1863).***
  - ***CSA Approved - File LR31996.***
- ***See pages 4-5 thru 4-10 for standard dimensions, contact arrangements, and panel mounting specifications.***

Materials

Insulator Material: Glass-filled polyester (black), UL 94 V-O rated

Connector Shell: Steel with zinc plating and yellow chromate finish or tin plating (grounding indents on plug)

Contact Material: Phosphor bronze (stamped)

Contact Plating: Gold flash or 30µin. gold in mating area and gold flash on the remainder. All over nickel.

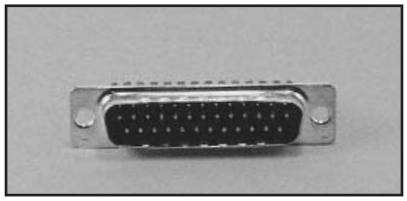

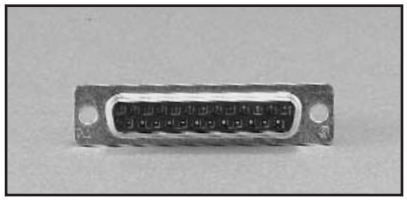

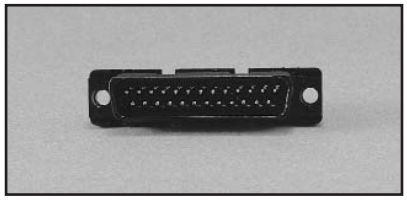

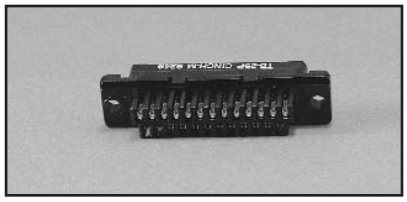

Environmental

Operating Temperature: -65°C to + 125°C

Shock: 50G peak per MIL-STD-202, Method 213, Condition G

Vibration: 12 cycles in three perpendicular directions @ 10-2000Hz, per MIL-STD-202, Method 204, Condition D

Moisture Resistance: 90-95% relative humidity @ 40°C for 96 hours per MIL-STD-202, Method 103

Electrical

Withstanding Voltage:	Minimum 1000V RMS @ sea level
Current Rating:	3 Amps
Contact Resistance:	2.7 milliohms maximum
Insulation Resistance:	5000 megohms maximum (initial); 1000 megohms (minimum) after environmental testing

Mechanical

Individual Contact Insertion and Separation Force (minimum/maximum): 0.7 oz./12 oz.

Durability: 500 mating cycles

D-subminiature Metal Shell
Solder Cup for Discrete Cable Wire
T* Series

- Solder channels between barriers permit single-pass soldering of each row without solder bridging.
- Will accommodate up to 22 AWG wire.

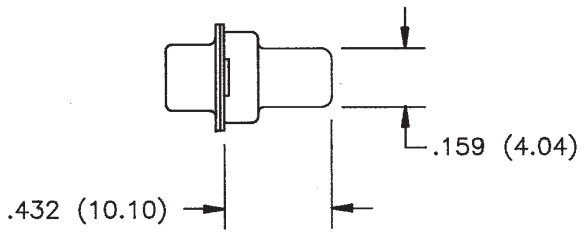

Ordering Information

Solder Cup Plugs

	Zinc-Plated Shell with Yellow Chromate Finish		Tin-Plated Shell with Grounding Indents	
Positions	Gold Flash	30µin. Gold	Gold Flash	30µin. Gold
9	TE-9PS	TE-9PS-30	TE-9PTIS	TE-9PTIS-30
15	TA-15PS	TA-15PS-30	TA-15PTIS	TA-15PTIS-30
25	TB-25PS	TB-25PS-30	TB-25PTIS	TB-25PTIS-30
37	TC-37PS	TC-37PS-30	TC-37PTIS	TC-37PTIS-30

Solder Cup Sockets

	Zinc-Plated Shell with Yellow Chromate Finish		Tin-Plated Shell	
Positions	Gold Flash	30µin. Gold	Gold Flash	30µin. Gold
9	TE-9SS	TE-9SS-30	TE-9STS	TE-9STS-30
15	TA-15SS	TA-15SS-30	TA-15STS	TA-15STS-30
25	TB-25SS	TB-25SS-30	TB-25STS	TB-25STS-30
37	TC-37SS	TC-37SS-30	TC-37STS	TC-37STS-30

- Will accommodate 24-26 AWG solid or stranded PVC wire.

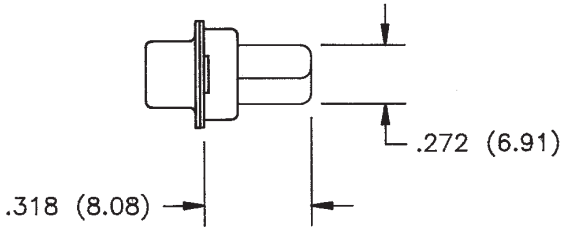

Ordering Information

IDC Plugs

	Zinc-Plated Shell with Yellow Chromate Finish		Tin-Plated Shell with Grounding Indents	
Positions	**Gold Flash**	**30µin. Gold**	**Gold Flash**	**30µin. Gold**
9	TE-9PSH	TE-9PSH-30	TES-9PTI	TES-9PTI-30
15	TA-15PSH	TA-15PSH-30	TAS-15PTI	TAS-15PTI-30
25	TB-25PSH	TB-25PSH-30	TBS-25PTI	TBS-25PTI-30
37	TC-37PSH	TC-37PSH-30	TCS-37PTI	TCS-37PTI-30

IDC Sockets

	Zinc-Plated Shell with Yellow Chromate Finish		Tin-Plated Shell	
Positions	**Gold Flash**	**30µin. Gold**	**Gold Flash**	**30µin. Gold**
9	TE-9SSH	TE-9SSH-30	TES-9ST	TES-9ST-30
15	TA-15SSH	TA-15SSH-30	TAS-15ST	TAS-15ST-30
25	TB-25SSH	TB-25SSH-30	TBS-25ST	TBS-25ST-30
37	TC-37SSH	TC-37SSH-30	TCS-37ST	TCS-37ST-30

- Auto-Clinch D Semi-Automatic Termination Tool #ACD-432: See page 4-100.
- Certi-Clinch D Manual Termination Tool #SD-CCWN: For 24-26 AWG wire: See page 4-100.
- Uni-Clinch D Single-Wire Hand Insertion Tool #SD-UC: See page 4-100.
- Super D Manual Stay Band Tool #SD-MSBT: See page 4-100.

- Optional strain relief covers for connectors when backshell is not required.

Ordering Information

Positions	Catalog No.
9	SSD-WC9
15	SSD-WC15
25	SSD-WC25
37	SSD-WC37

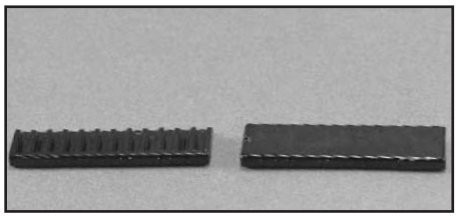

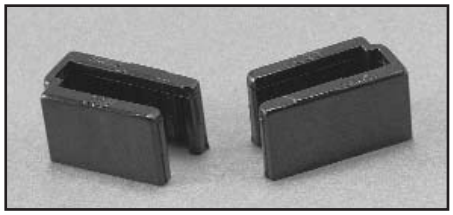

- One-piece cover for 9 contact size. Order one per connector. Two-piece cover for other sizes. Order two per connector.
- Cover fits both plug and socket.

D-subminiature All-Plastic IDC for Discrete Cable Wire T* Series

Cinch

- For use only with SDH Series Gray Backshell on pages 4-89 thru 4-90.
- Offered in 9, 15, 25, and 37 position plugs and sockets.
- Connector will accommodate 24-28 AWG wire.
- Offered with plain flanges and .120 mounting holes, threaded bushings, latch blocks, or latch blocks and threaded bushings.

- Auto-Clinch D Semi-Automatic Termination Tool #ACD-432: See page 4-100.
- Certi-Clinch D Manual Termination Tool #SD-CC for 24-28 AWG wire: See page 4-100.
- Uni-Clinch D Single-Wire Hand Insertion Tool #SD-UC: See page 4-100.
- Super D Manual Stay Band Tool #SD-MSBT: See page 4-100.

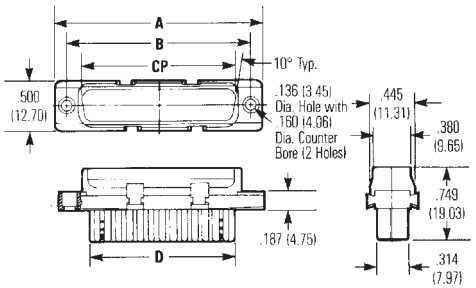

Plug with Latching Blocks

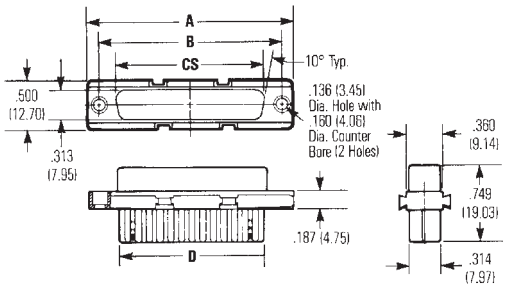

Socket with Latching Blocks

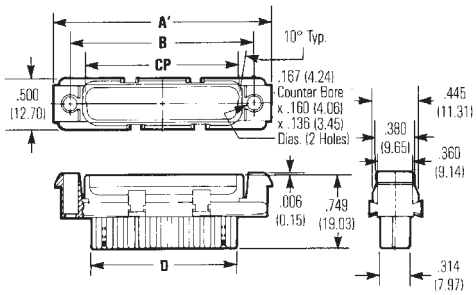

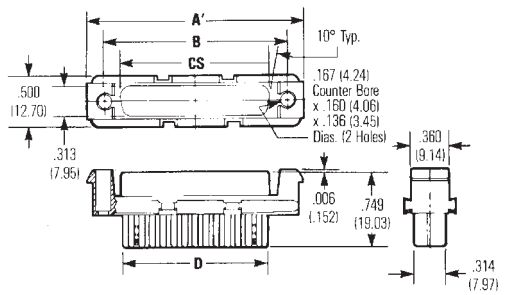

Dimensions

	A		A		B		CP		CS		D	
Positions	in	mm	in	mm	in	mm	in	mm	in	mm	in	mm
9	1.209	30.71	1.309	33.25	.984	24.99	.668	16.96	.642	16.31	.592	15.04
15	1.536	39.01	1.636	41.55	1.312	33.32	.995	25.28	.970	24.64	.918	23.31
25	2.079	52.81	2.179	55.35	1.852	47.04	1.535	38.99	1.512	38.40	1.462	37.13
37	2.724	69.19	2.824	71.73	2.500	63.50	2.183	55.45	2.158	54.81	2.114	53.70

Ordering Information

IDC All-Plastic Plugs

Plain Flange

	Mounting Holes		4-40 Threaded Bushings	
Positions	Gold Flash	30µin. Gold	Gold Flash	30µin. Gold
9	TE-9P	TE-9P-30	TE-9PTB	TE-9PTB-30
15	TA-15P	TA-15P-30	TA-15PTB	TA-15PTB-30
25	TB-25P	TB-25P-30	TB-25PTB	TB-25PTB-30
37	TC-37P	TC-37P-30	TC-37PTB	TC-37PTB-30

Flange with Latch Block

	Mounting Holes		4-40 Threaded Bushings	
Positions	Gold Flash	30µin. Gold	Gold Flash	30µin. Gold
9	TE-9PLB	TE-9PLB-30	TE-9PLB-1	TE-9PLB-1-30
15	TA-15PLB	TA-15PLB-30	TA-15PLB-1	TA-15PLB-1-30
25	TB-25PLB	TB-25PLB-30	TB-25PLB-1	TB-25PLB-1-30
37	TC-37PLB	TC-37PLB-30	TC-37PLB-1	TC-37PLB-1-30

IDC All-Plastic Sockets

Plain Flange

	Mounting Holes		4-40 Threaded Bushings	
Positions	Gold Flash	30µin. Gold	Gold Flash	30µin. Gold
9	TE-9S	TE-9S-30	TE-9STB	TE-9STB-30
15	TA-15S	TA-15S-30	TA-15STB	TA-15STB-30
25	TB-25S	TB-25S-30	TB-25STB	TB-25STB-30
37	TC-37S	TC-37S-30	TC-37STB	TC-37STB-30

Flange with Latch Block

	Mounting Holes		4-40 Threaded Bushings	
Positions	Gold Flash	30µin. Gold	Gold Flash	30µin. Gold
9	TE-9SLB	TE-9SLB-30	TE-9SLB-1	TE-9SLB-1-30
15	TA-15SLB	TA-15SLB-30	TA-15SLB-1	TA-15SLB-1-30
25	TB-25SLB	TB-25SLB-30	TB-25SLB-1	TB-25SLB-1-30
37	TC-37SLB	TC-37SLB-30	TC-37SLB-1	TC-37SLB-1-30

D-subminiature Metal Shell
Solder Cup, Vertical PCB Mount, and Wire Wrap
Basic D Series

Cinch

Features

- ***Offered in Wire Wrap and Solder Cup styles for wire termination and vertical style for PCB mount.***
- ***Offered with .120 mounting holes, 4-40 clinch nuts, and dual float bushings.***
- ***Offered in 9, 15, 25, 37, and 50 position plugs and sockets.***
- ***Available with gold flash or 30µin. gold plating.***
- ***Approvals:***
  - ***UL Recognized - Files E170218 (UL1977) and E130965 (UL1863).***
  - ***CSA Approved - File LR31996.***
- ***See pages 4-5 thru 4-10 for standard dimensions, contact arrangements, and panel mounting specifications.***

Materials

Insulator Material: Glass-filled polyester (white), UL 94V-O rated

Connector Shell: Steel with zinc plating and yellow chromate finish or tin plating (grounding indents on plug)

4-40 Clinch Nut: Steel with cadmium plating and yellow chromate finish

Dual Float Bushing: Stainless steel, passivated

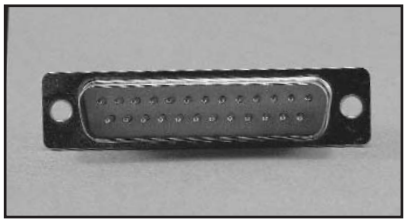

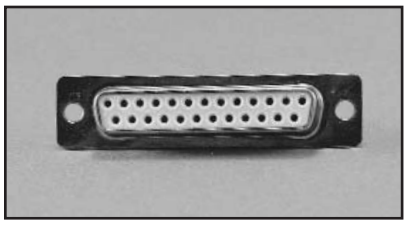

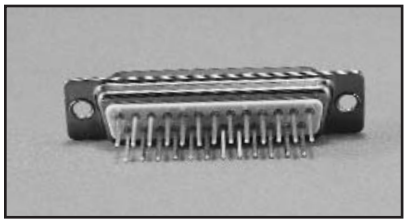

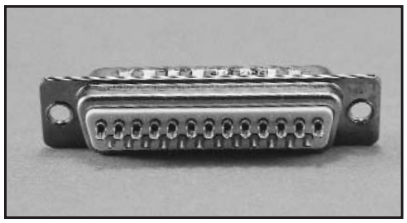

Environmental

Operating Temperature: -65°C to + 125°C

Shock: 50G peak per MIL-STD-202, Method 213, Condition G

Vibration: 12 cycles in three perpendicular directions @ 10-2000Hz, per MIL-STD-202, Method 204, Condition D

Moisture Resistance: 90-95% relative humidity @ 40°C for 96 hours per MIL-STD-202, Method 103

Electrical

Withstanding Voltage:	Minimum 1250V RMS @ sea level
Current Rating:	5 Amps
Contact Resistance:	2.7 milliohms maximum
Insulation Resistance:	5000 megohms maximum (initial); 1000 megohms (minimum) after environmental testing

Mechanical

Individual Contact Insertion and Separation Force (minimum/maximum): 0.7 oz./12 oz.

Durability: 500 mating cycles

D-subminiature Metal Shell
Solder Cup
Basic D Series

Cinch

- Available with stamped or machined contacts.
- Will accommodate up to 20 AWG wire.

Materials

- Contact Material: Copper Alloy

- Contact Plating:
  - Stamped contacts with gold flash or 30µin. gold in mating area, gold flash or tin/lead on remainder. All over nickel.
  - Screw machine contacts with gold flash or 30µin. gold. All over nickel.

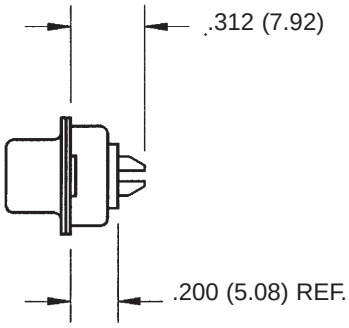

Ordering Information

Solder Cup Plugs

Zinc-Plated Shell with Yellow Chromate Finish

Stamped Contact with Gold Flash in Solder Cup

	Mounting Holes		4-40 Clinch Nuts		Dual Float Bushings	
Positions	Gold Flash	30µin. Gold	Gold Flash	30µin. Gold	Gold Flash	30µin. Gold
9	DE-9P	DE-9P-30	DEE-9P	DEE-9P-30	DEY-9P	DEY-9P-30
15	DA-15P	DA-15P-30	DAE-15P	DAE-15P-30	DAY15P	DAY-15P-30
25	DB-25P	DB-25P-30	DBE-25P	DBE-25P-30	DBY-25P	DBY-25P-30
37	DC-37P	DC-37P-30	DCE-37P	DCE-37P-30	DCY-37P	DCY-37P-30
50	DD-50P	DD-50P-30	DDE-50P	DDE-50P-30	DDY-50P	DDY-50P-30

Stamped Contact with Tin/Lead in Solder Cup

	Mounting Holes		4-40 Clinch Nuts		Dual Float Bushings	
Positions	Gold Flash	30µin. Gold	Gold Flash	30µin. Gold	Gold Flash	30µin. Gold
9	DE-9P-II	DE-9P-II-30	DEE-9P-II	DEE-9P-II-30	DEY-9P-II	DEY-9P-II-30
15	DA-15P-II	DA-15P-II-30	DAE-15P-II	DAE-15P-II-30	DAY-15P-II	DAY-15-PII-30
25	DB-25P-II	DB-25P-II-30	DBE-25P-II	DBE-25P-II-30	DBY-25P-II	DBY-25-PII-30
37	DC-37P-II	DC-37P-II-30	DCE-37P-II	DCE-37P-II-30	DCY-37-P-II	DCY-37-PII-30
50	DD-50P-II	DD-50P-II-30	DDE-50P-II	DDE-50P-II-30	DDY-50-P-II	DDY-50-PII-30

Screw Machine Contact

	Mounting Holes		4-40 Clinch Nuts		Dual Float Bushings	
Positions	Gold Flash	30µin. Gold	Gold Flash	30µin. Gold	Gold Flash	30µin. Gold
9	DE-9P-SM	DE-9P-SM-30	DEE-9P-SM	DEE-9P-SM-30	DEY-9P-SM	DEY-9P-SM-30
15	DA-15P-SM	DA-15P-SM-30	DAE-15P-SM	DAE-15P-SM-30	DAY-15P-SM	DAY-15P-SM-30
25	DB-25P-SM	DB-25P-SM-30	DBE-25P-SM	DBE-25P-SM-30	DBY-25P-SM	DBY-25P-SM-30
37	DC-37P-SM	DC-37P-SM-30	DCE-37P-SM	DCE-37P-SM-30	DCY-37P-SM	DCY-37P-SM-30
50	DD-50P-SM	DD-50P-SM-30	DDE-50P-SM	DDE-50P-SM-30	DDY-50P-SM	DDY-50P-SM-30

Ordering Information

Solder Cup Plugs (Cont'd)

Tin-Plated Shell with Grounding Indents

Stamped Contact with Gold Flash in Solder Cup

	Mounting Holes		4-40 Clinch Nuts		Dual Float Bushings	
Positions	Gold Flash	30µin. Gold	Gold Flash	30µin. Gold	Gold Flash	30µin. Gold
9	DE-9PTI	DE-9PTI-30	DEE-9PTI	DEE-9PTI-30	DEY-9PTI	DEY-9PTI-30
15	DA-15PTI	DA-15PTI-30	DAE-15PTI	DAE-15PTI-30	DAY-15PTI	DAY-15PTI-30
25	DB-25PTI	DB-25PTI-30	DBE-25PTI	DBE-25PTI-30	DBY-25PTI	DBY-25PTI-30
37	DC-37PTI	DC-37PTI-30	DCE-37PTI	DCE-37PTI-30	DCY-37PTI	DCY-37PTI-30
50	DD-50PTI	DD-50PTI-30	DDE-50PTI	DDE-50PTI-30	DDY-50PTI	DDY-50PTI-30

Stamped Contact with Tin/Lead in Solder Cup

	Mounting Holes		4-40 Clinch Nuts		Dual Float Bushings	
Positions	Gold Flash	30µin. Gold	Gold Flash	30µin. Gold	Gold Flash	30µin. Gold
9	DE-9PTI-II	DE-9PTI-II-30	DEE-9PTI-II	DEE-9PTI-II-30	DEY-9PTI-II	DEY-9PTI-II-30
15	DA-15PTI-II	DA-15PTI-II-30	DAE-15PTI-II	DAE-15PTI-II-30	DAY-15PTI-II	DAY-15PTI-II-30
25	DB-25PTI-II	DB-25PTI-II-30	DBE-25PTI-II	DBE-25PTI-II-30	DBY-25PTI-II	DBY-25PTI-II-30
37	DC-37PTI-II	DC-37PTI-II-30	DCE-37PTI-II	DCE-37PTI-II-30	DCY-37PTI-II	DCY-37PTI-II-30
50	DD-50PTI-II	DD-50PTI-II-30	DDE-50PTI-II	DDE-50PTI-II-30	DDY-50PTI-II	DDY-50PTI-II-30

Screw Machine Contact

	Mounting Holes		4-40 Clinch Nuts		Dual Float Bushings	
Positions	Gold Flash	30µin. Gold	Gold Flash	30µin. Gold	Gold Flash	30µin. Gold
9	DE-9PTI-SM	DE-9PTI-SM-30	DEE-9PTI-SM	DEE-9PTI-SM-30	DEY-9PTI-SM	DEY-9PTI-SM-30
15	DA-15PTI-SM	DA-15PTI-SM-30	DAE-15PTI-SM	DAE-15PTI-SM-30	DAY-15PTI-SM	DAY-15PTI-SM-30
25	DB-25PTI-SM	DB-25PTI-SM-30	DBE-25PTI-SM	DBE-25PTI-SM-30	DBY-25PTI-SM	DBY-25PTI-SM-30
37	DC-37PTI-SM	DC-37PTI-SM-30	DCE-37PTI-SM	DCE-37PTI-SM-30	DCY-37PTI-SM	DCY-37PTI-SM-30
50	DD-50PTI-SM	DD-50PTI-SM-30	DDE-50PTI-SM	DDE-50PTI-SM-30	DDY-50PTI-SM	DDY-50PTI-SM-30

Ordering Information

Solder Cup Sockets

Zinc-Plated Shell with Yellow Chromate Finish

Stamped Contact with Gold Flash in Solder Cup

	Mounting Holes		4-40 Clinch Nuts		Dual Float Bushings	
Positions	Gold Flash	30µin. Gold	Gold Flash	30µin. Gold	Gold Flash	30µin. Gold
9	DE-9S	DE-9S-30	DEE-9S	DEE-9S-30	DEY-9S	DEY-9S-30
15	DA-15S	DA-15S-30	DAE-15S	DAE-15S-30	DAY-15S	DAY-15S-30
25	DB-25S	DB-25S-30	DBE-25S	DBE-25S-30	DBY-25S	DBY-25S-30
37	DC-37S	DC-37S-30	DCE-37S	DCE-37S-30	DCY-37S	DCY-37S-30
50	DD-50S	DD-50S-30	DDE-50S	DDE-50S-30	DDY-50S	DDY-50S-30

Stamped Contact Tin/Lead in Solder Cup

	Mounting Holes		4-40 Clinch Nuts		Dual Float Bushings	
Positions	Gold Flash	30µin. Gold	Gold Flash	30µin. Gold	Gold Flash	30µin. Gold
9	DE-9S-II	DE-9S-II-30	DEE-9S-II	DEE-9S-II-30	DEY-9S-II	DEY-9S-II-30
15	DA-15S-II	DA-15S-II-30	DAE-15S-II	DAE-15S-II-30	DAY-15S-II	DAY-15S-II-30
25	DB-25S-II	DB-25S-II-30	DBE-25S-II	DBE-25S-II-30	DBY-25S-II	DBY-25S-II-30
37	DC-37S-II	DC-37S-II-30	DCE-37S-II	DCE-37S-II-30	DCY-37S-II	DCY-37S-II-30
50	DD-50S-II	DD-50S-II-30	DDE-50S-II	DDE-50S-II-30	DDY-50S-II	DDY-50S-II-30

Screw Machine Contact

	Mounting Holes		4-40 Clinch Nuts		Dual Float Bushings	
Positions	Gold Flash	30µin. Gold	Gold Flash	30µin. Gold	Gold Flash	30µin. Gold
9	DE-9S-SM	DE-9S-SM-30	DEE-9S-SM	DEE-9S-SM-30	DEY-9S-SM	DEY-9S-SM-30
15	DA-15S-SM	DA-15S-SM-30	DAE-15S-SM	DAE-15S-SM-30	DAY-15S-SM	DAY-15S-SM-30
25	DB-25S-SM	DB-25S-SM-30	DBE-25S-SM	DBE-25S-SM-30	DBY-25S-SM	DBY-25S-SM-30
37	DC-37S-SM	DC-37S-SM-30	DCE-37S-SM	DCE-37S-SM-30	DCY-37S-SM	DCY-37S-SM-30
50	DD-50S-SM	DD-50S-SM-30	DDE-50S-SM	DDE-50S-SM-30	DDY-50S-SM	DDY-50S-SM-30

Tin-Plated Shell

Stamped Contact with Gold Flash in Solder Cup

	Mounting Holes		4-40 Clinch Nuts		Dual Float Bushings	
Positions	Gold Flash	30µin. Gold	Gold Flash	30µin. Gold	Gold Flash	30µin. Gold
9	DE-9ST	DE-9ST-30	DEE-9ST	DEE-9ST-30	DEY-9ST	DEY-9ST-30
15	DA-15ST	DA-15ST-30	DAE-15ST	DAE-15ST-30	DAY-15ST	DAY-15ST-30
25	DB-25ST	DB-25ST-30	DBE-25ST	DBE-25ST-30	DBY-25ST	DBY-25ST-30
37	DC-37ST	DC-37ST-30	DCE-37ST	DCE-37ST-30	DCY-37ST	DCY-37ST-30
50	DD-50ST	DD-50ST-30	DDE-50ST	DDE-50ST-30	DDY-50ST	DDY-50ST-30

Stamped Contact with Tin/Lead in Solder Cup

	Mounting Holes		4-40 Clinch Nuts		Dual Float Bushings	
Positions	Gold Flash	30µin. Gold	Gold Flash	30µin. Gold	Gold Flash	30µin. Gold
9	DE-9ST-II	DE-9ST-II-30	DEE-9ST-II	DEE-9ST-II-30	DEY-9ST-II	DEY-9ST-II-30
15	DA-15ST-II	DA-15ST-II-30	DAE-15ST-II	DAE-15ST-II-30	DAY-15ST-II	DAY-15ST-II-30
25	DB-25ST-II	DB-25ST-II-30	DBE-25ST-II	DBE-25ST-II-30	DBY-25ST-II	DBY-25ST-II-30
37	DC-37ST-II	DC-37ST-II-30	DCE-37ST-II	DCE-37ST-II-30	DCY-37ST-II	DCY-37ST-II-30
50	DD-50ST-II	DD-50ST-II-30	DDE-50ST-II	DDE-50ST-II-30	DDY-50ST-II	DDY-50ST-II-30

Screw Machine Contact

	Mounting Holes		4-40 Clinch Nuts		Dual Float Bushings	
Positions	Gold Flash	30µin. Gold	Gold Flash	30µin. Gold	Gold Flash	30µin. Gold
9	DE-9ST-SM	DE-9ST-SM-30	DEE-9ST-SM	DEE-9ST-SM-30	DEY-9ST-SM	DEY-9ST-SM-30
15	DA-15ST-SM	DA-15ST-SM-30	DAE-15ST-SM	DAE-15ST-SM-30	DAY-15ST-SM	DAY-15ST-SM-30
25	DB-25ST-SM	DB-25ST-SM-30	DBE-25ST-SM	DBE-25ST-SM-30	DBY-25ST-SM	DBY-25ST-SM-30
37	DC-37ST-SM	DC-37ST-SM-30	DCE-37ST-SM	DCE-37ST-SM-30	DCY-37ST-SM	DCY-37ST-SM-30
50	DD-50ST-SM	DD-50ST-SM-30	DDE-50ST-SM	DDE-50ST-SM-30	DDY-50ST-SM	DDY-50ST-SM-30

D-subminiature Metal Shell
Vertical Dip Solder PCB
Basic D Series

Cinch

- .040" contact diameter.
- Short rear insulator provides low profile on PCB.
- Offered with .120 mounting holes, dual float bushings, or optional 4-40 clinch nuts.

Materials

- Contact Material: Socket - Phosphor bronze (machined), Plug - Brass (machined).
- Contact Plating: Gold flash or 30µin. gold over nickel.

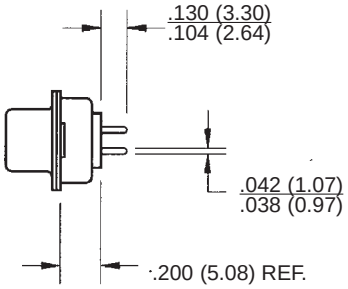

Ordering Information

Vertical PCB Plugs

Zinc-Plated Shell with Yellow Chromate Finish

	Mounting Holes		4-40 Clinch Nuts		Dual Float Bushings	
Positions	Gold Flash	30µin. Gold	Gold Flash	30µin. Gold	Gold Flash	30µin. Gold
9	DE-9PV	DE-9PV-30	DEE-9PV	DEE-9PV-30	DEY-9PV	DEY-9PV-30
15	DA-15PV	DA-15PV-30	DAE-15PV	DAE-15PV-30	DAY-15PV	DAY-15PV-30
25	DB-25PV	DB-25PV-30	DBE-25PV	DBE-25PV-30	DBY-25PV	DBY-25PV-30
37	DC-37PV	DC-37PV-30	DCE-37PV	DCE-37PV-30	DCY-37PV	DCY-37PV-30
50	DD-50PV	DD-50PV-30	DDE-50PV	DDE-50PV-30	DCY-50PV	DDY-50PV-30

Tin-Plated Shell with Grounding Indents

	Mounting Holes		4-40 Clinch Nuts		Dual Float Bushings	
Positions	Gold Flash	30µin. Gold	Gold Flash	30µin. Gold	Gold Flash	30µin. Gold
9	DE-9PVTI	DE-9PVTI-30	DEE-9PVTI	DEE-9PVTI-30	DEY-9PVTI	DEY-9PVTI-30
15	DA-15PVTI	DA-15PVTI-30	DAE-15PVTI	DAE-15PVTI-30	DAY-15PVTI	DAY-15PVTI-30
25	DB-25PVTI	DB-25PVTI-30	DBE-25PVTI	DBE-25PVTI-30	DBY-25PVTI	DBY-25PVTI-30
37	DC-37PVTI	DC-37PVTI-30	DCE-37PVTI	DCE-37PVTI-30	DCY-37PVTI	DCY-37PVTI-30
50	DD-50PVTI	DD-50PVTI-30	DDE-50PVTI	DDE-50PVTI-30	DCY-50PVTI	DDY-50PVTI-30

Vertical PCB Sockets

Zinc-Plated Shell with Yellow Chromate Finish

	Mounting Holes		4-40 Clinch Nuts		Dual Float Bushings	
Positions	Gold Flash	30µin. Gold	Gold Flash	30µin. Gold	Gold Flash	30µin. Gold
9	DE-9SV	DE-9SV-30	DEE-9SV	DEE-9SV-30	DEY-9SV	DEY-9SV-30
15	DA-15SV	DA-15SV-30	DAE-15SV	DAE-15SV-30	DAY-15SV	DAY-15SV-30
25	DB-25SV	DB-25SV-30	DBE-25SV	DBE-25SV-30	DBY-25SV	DBY-25SV-30
37	DC-37SV	DC-37SV-30	DCE-37SV	DCE-37SV-30	DCY-37SV	DCY-37SV-30
50	DD-50SV	DD-50SV-30	DDE-50SV	DDE-50SV-30	DCY-50SV	DDY-50SV-30

Tin-Plated Shell

	Mounting Holes		4-40 Clinch Nuts		Dual Float Bushings	
Positions	Gold Flash	30µin. Gold	Gold Flash	30µin. Gold	Gold Flash	30µin. Gold
9	DE-9SVT	DE-9SVT-30	DEE-9SVT	DEE-9SVT-30	DEY-9SVT	DEY-9SVT-30
15	DA-15SVT	DA-15SVT-30	DAE-15SVT	DAE-15SVT-30	DAY-15SVT	DAY-15SVT-30
25	DB-25SVT	DB-25SVT-30	DBE-25SVT	DBE-25SVT-30	DBY-25SVT	DBY-25SVT-30
37	DC-37SVT	DC-37SVT-30	DCE-37SVT	DCE-37SVT-30	DCY-37SVT	DCY-37SVT-30
50	DD-50SVT	DD-50SVT-30	DDE-50SVT	DDE-50SVT-30	DDY-50SVT	DDY-50SVT-30

- Reliable wire wrap termination.
- Two contact lengths: .375" or .585".
- .025" square contact tails.

Materials

- Contact Material: Copper alloy (machined).
- Contact Plating: Gold flash or 30µin. gold. All over nickel.

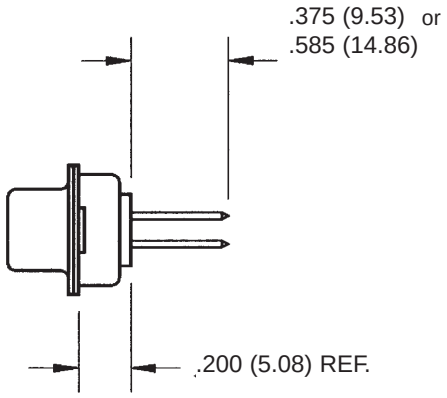

Ordering Information

Wire Wrap Plugs

.375" Tail Length

Zinc-Plated Shell with Yellow Chromate Finish

	Mounting Holes		4-40 Clinch Nuts		Dual Float Bushings	
Positions	Gold Flash	30µin. Gold	Gold Flash	30µin. Gold	Gold Flash	30µin. Gold
9	DE-9P-F179	DE-9P-F179-30	DEE-9P-F179	DEE-9P-F179-30	DEY-9P-F179	DEY-9P-F179-30
15	DA-15P-F179	DA-15P-F179-30	DAE-15P-F179	DAE-15P-F179-30	DAY-15P-F179	DAY-15P-F179-30
25	DB-25P-F179	DB-25P-F179-30	DBE-25P-F179	DBE-25P-F179-30	DBY-25P-F179	DBY-25P-F179-30
37	DC-37P-F179	DC-37P-F179-30	DCE-37P-F179	DCE-37P-F179-30	DCY-37P-F179	DCY-37P-F179-30
50	DD-50P-F179	DD-50P-F179-30	DDE-50P-F179	DDE-50P-F179-30	DDY-50P-F179	DDY-50P-F179-30

Tin-Plated Shell with Grounding Indents

	Mounting Holes		4-40 Clinch Nuts		Dual Float Bushings	
Positions	Gold Flash	30µin. Gold	Gold Flash	30µin. Gold	Gold Flash	30µin. Gold
9	DE-9PTI-F179	DE-9PTI-F179-30	DEE-9PTI-F179	DEE-9PTI-F179-30	DEY-9PTI-F179	DEY-9PTI-F179-30
15	DA-15PTI-F179	DA-15PTI-F179-30	DAE-15PTI-F179	DAE-15PTI-F179-30	DAY-15PTI-F179	DAY-15PTI-F179-30
25	DB-25PTI-F179	DB-25PTI-F179-30	DBE-25PTI-F179	DBE-25PTI-F179-30	DBY-25PTI-F179	DBY-25PTI-F179-30
37	DC-37PTI-F179	DC-37PTI-F179-30	DCE-37PTI-F179	DCE-37PTI-F179-30	DCY-37PTI-F179	DCY-37PTI-F179-30
50	DD-50PTI-F179	DD-50PTI-F179-30	DDE-50PTI-F179	DDE-50PTI-F179-30	DDY-50PTI-F179	DDY-50PTI-F179-30

Ordering Information

Wire Wrap Plugs (Cont'd)

.585" Tail Length

Zinc-Plated Shell with Yellow Chromate Finish

	Mounting Holes		4-40 Clinch Nuts		Dual Float Bushings	
Positions	Gold Flash	30µin. Gold	Gold Flash	30µin. Gold	Gold Flash	30µin. Gold
9	DE-9P-F179C	DE-9P-F179C-30	DEE-9P-F179C	DEE-9PF-179C-30	DEY-9P-F179C	DEY-9P-F179C-30
15	DA-15P-F179C	DA-15P-F179C-30	DAE-15P-F179C	DAE-15PF-179C-30	DAY-15P-F179C	DAY-15P-F179C-30
25	DB-25P-F179C	DB-25P-F179C-30	DBE-25P-F179C	DBE-25PF-179C-30	DBY-25P-F179C	DBY-25P-F179C-30
37	DC-37P-F179C	DC-37P-F179C-30	DCE-37P-F179C	DCE-37PF-179C-30	DCY-37P-F179C	DCY-37P-F179C-30
50	DD-50P-F179C	DD-50P-F179C-30	DDE-50P-F179C	DDE-50PF-179C-30	DDY-50P-F179C	DDY-50P-F179C-30

Tin-Plated Shell with Grounding Indents

	Mounting Holes		4-40 Clinch Nuts		Dual Float Bushings	
Positions	Gold Flash	30µin. Gold	Gold Flash	30µin. Gold	Gold Flash	30µin. Gold
9	DE-9PTI-F179C	DE-9PTI-F179C-30	DEE-9PTI-F179C	DEE-9PTI-F179C-30	DEY-9PTI-F179C	DEY-9PTI-F179C-30
15	DA-15PTI-F179C	DA-15PTI-F179C-30	DAE-15PTI-F179C	DAE-15PTI-F179C-30	DAY-15PTI-F179C	DAY-15PTI-F179C-30
25	DB-25PTI-F179C	DB-25PTI-F179C-30	DBE-25PTI-F179C	DBE-25PTI-F179C-30	DBY-25PTI-F179C	DBY-25PTI-F179C-30
37	DC-37PTI-F179C	DC-37PTI-F179C-30	DCE-37PTI-F179C	DCE-37PTI-F179C-30	DCY-37PTI-F179C	DCY-37PTI-F179C-30
50	DD-50PTI-F179C	DD-50PTI-F179C-30	DDE-50PTI-F179C	DDE-50PTI-F179C-30	DDY-50PTI-F179C	DDY-50PTI-F179C-30

Ordering Information

Wire Wrap Sockets

.375" Tail Length

Zinc-Plated Shell with Yellow Chromate Finish

	Mounting Holes		4-40 Clinch Nuts		Dual Float Bushings	
Positions	Gold Flash	30µin. Gold	Gold Flash	30µin. Gold	Gold Flash	30µin. Gold
9	DE-9S-F179	DE-9S-F179-30	DEE-9S-F179	DEE-9S-F179-30	DEY-9S-F179	DEY-9S-F179-30
15	DA-15S-F179	DA-15S-F179-30	DAE-15S-F179	DAE-15S-F179-30	DAY-15S-F179	DAY-15S-F179-30
25	DB-25S-F179	DB-25S-F179-30	DBE-25S-F179	DBE-25S-F179-30	DBY-25S-F179	DBY-25S-F179-30
37	DC-37S-F179	DC-37S-F179-30	DCE-37S-F179	DCE-37S-F179-30	DCY-37S-F179	DCY-37S-F179-30
50	DD-50S-F179	DD-50S-F179-30	DDE-50S-F179	DDE-50S-F179-30	DDY-50S-F179	DDY-50S-F179-30

Tin-Plated Shell

	Mounting Holes		4-40 Clinch Nuts		Dual Float Bushings	
Positions	Gold Flash	30µin. Gold	Gold Flash	30µin. Gold	Gold Flash	30µin. Gold
9	DE-9ST-F179	DE-9ST-F179-30	DEE-9ST-F179	DEE-9ST-F179-30	DEY-9ST-F179	DEY-9ST-F179-30
15	DA-15ST-F179	DA-15ST-F179-30	DAE-15ST-F179	DAE-15ST-F179-30	DAY-15ST-F179	DAY-15ST-F179-30
25	DB-25ST-F179	DB-25ST-F179-30	DBE-25ST-F179	DBE-25ST-F179-30	DBY-25ST-F179	DBY-25ST-F179-30
37	DC-37ST-F179	DC-37ST-F179-30	DCE-37ST-F179	DCE-37ST-F179-30	DCY-37ST-F179	DCY-37ST-F179-30
50	DD-50ST-F179	DD-50ST-F179-30	DDE-50ST-F179	DDE-50ST-F179-30	DDY-50ST-F179	DDY-50ST-F179-30

.585" Tail Length

Zinc-Plated Shell with Yellow Chromate Finish

	Mounting Holes		4-40 Clinch Nuts		Dual Float Bushings	
Positions	Gold Flash	30µin. Gold	Gold Flash	30µin. Gold	Gold Flash	30µin. Gold
9	DE-9S-F179C	DE-9S-F179C-30	DEE-9S-F179C	DEE-9S-F179C-30	DEY-9S-F179C	DEY-9S-F179C-30
15	DA-15S-F179C	DA-15S-F179C-30	DAE-15S-F179C	DAE-15S-F179C-30	DAY-15S-F179C	DAY-15S-F179C-30
25	DB-25S-F179C	DB-25S-F179C-30	DBE-25S-F179C	DBE-25S-F179C-30	DBY-25S-F179C	DBY-25S-F179C-30
37	DC-37S-F179C	DC-37S-F179C-30	DCE-37S-F179C	DCE-37S-F179C-30	DCY-37S-F179C	DCY-37S-F179C-30
50	DD-50S-F179C	DD-50S-F179C-30	DDE-50S-F179C	DDE-50S-F179C-30	DDY-50S-F179C	DDY-50S-F179C-30

Tin-Plated Shell

	Mounting Holes		4-40 Clinch Nuts		Dual Float Bushings	
Positions	Gold Flash	30µin. Gold	Gold Flash	30µin. Gold	Gold Flash	30µin. Gold
9	DE-9ST-F179C	DE-9ST-F179C-30	DEE-9ST-F179C	DEE-9ST-F179C-30	DEY-9ST-F179C	DEY-9ST-F179C-30
15	DA-15ST-F179C	DA-15ST-F179C-30	DAE-15ST-F179C	DAE-15ST-F179C-30	DAY-15ST-F179C	DAY-15ST-F179C-30
25	DB-25ST-F179C	DB-25ST-F179C-30	DBE-25ST-F179C	DBE-25ST-F179C-30	DBY-25ST-F179C	DBY-25ST-F179C-30
37	DC-37ST-F179C	DC-37ST-F179C-30	DCE-37ST-F179C	DCE-37ST-F179C-30	DCY-37ST-F179C	DCY-37ST-F179C-30
50	DD-50ST-F179C	DD-50ST-F179C-30	DDE-50ST-F179C	DDE-50ST-F179C-30	DDY-50ST-F179C	DDY-50ST-F179C-30

D-subminiature Metal Shell
Solder Cup, Right-Angle, and Vertical PCB
Series 1 - High Reliability

Cinch

Features

- ***Available in vertical and right-angle dip solder PCB connectors and solder cup version for wire termination.***
- ***Commercial version of M24308 military connectors with tin-plated or zinc-plated shell and 30µin. gold plating.***
- ***Monoblock green diallyl phthalate insulator for improved electrical performance.***
- ***Machined contacts for precision performance.***
- ***Offered in 9, 15, 25, 37, and 50 (except right-angle version) position plugs and sockets.***
- ***Offered with .120 mounting holes, 4-40 clinch nuts (except right-angle version), or dual float bushings (except right-angle version).***
- ***Approvals:***
  - ***UL Recognized - Files E170218 (UL1977)and E130965 (UL1863).***
  - ***CSA Approved - File LR31996.***
- ***See pages 4-5 thru 4-10 for standard dimensions, contact arrangements, and panel mounting specifications.***

Materials

Insulator Material: Glass-filled diallyl phthalate (green) UL 94V-0 rated
Connector Shell: Steel with zinc plating and yellow chromate finish or tin plating (grounding indents on plug)
Contact Material: Plug - Brass (machined), Socket - Phosphor bronze (machined)
Contact Plating: 30µin. gold over nickel
4-40 Clinch Nut: Steel with cadmium plating and yellow chromate finish
Dual Float Bushing: Stainless steel, passivated

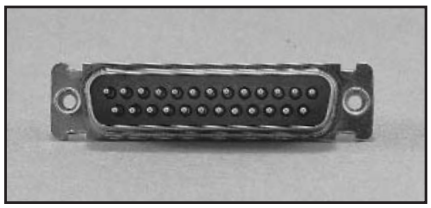

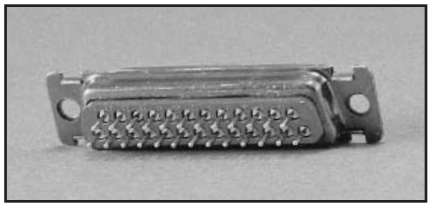

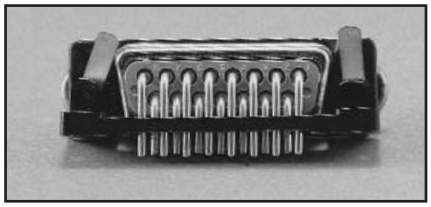

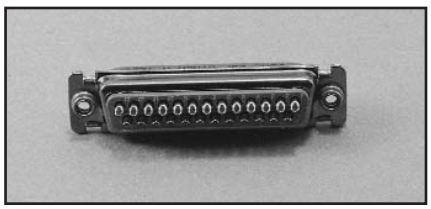

Environmental

Operating Temperature: -65°C to + 125°C
Shock: 50G peak per MIL-STD-202, Method 213, Condition G
Vibration: 12 cycles in three perpendicular directions @ 10-2000Hz, per MIL-STD-202, Method 204, Condition D
Moisture Resistance: 90-95% relative humidity @ 40°C for 96 hours per MIL-STD-202, Method 103

Electrical

Withstanding Voltage:	Minimum 1250V RMS @ sea level
Current Rating:	5 Amps
Contact Resistance:	2.7 milliohms maximum
Insulation Resistance:	5000 megohms maximum (initial); 1000 megohms (minimum) after environmental testing

Mechanical

Individual Contact Insertion and Separation Force (minimum/maximum): 0.7 oz./12 oz.
Durability: 500 mating cycles

- Will accommodate up to 20 AWG wire.

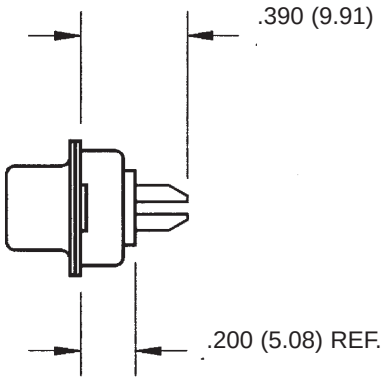

Ordering Information

Solder Cup Plugs

	Zinc-Plated Shell with Yellow Chromate Finish			Tin-Plated Shell with Grounding Indents		
Positions	**Mounting Hole**	**4-40 Clinch Nut**	**Dual Float Bushings**	**Mounting Hole**	**4-40 Clinch Nut**	**Dual Float Bushings**
9	DEM-9P	DEME-9P	DEMY-9P	DEM-9PTI	DEME-9PTI	DEMY-9PTI
15	DAM-15P	DAME-15P	DAMY-15P	DAM-15PTI	DAME-15PTI	DAMY-15PTI
25	DBM-25P	DBME-25P	DBMY-25P	DBM-25PTI	DBME-25PTI	DBMY-25PTI
37	DCM-37P	DCME-37P	DCMY-37P	DCM-37PTI	DCME-37PTI	DCMY-37PTI
50	DDM-50P	DDME-50P	DDMY-50P	DDM-50PTI	DDME-50PTI	DDMY-50PTI

Solder Cup Sockets

	Zinc-Plated Shell with Yellow Chromate Finish			Tin-Plated Shell		
Positions	**Mounting Hole**	**4-40 Clinch Nut**	**Dual Float Bushings**	**Mounting Hole**	**4-40 Clinch Nut**	**Dual Float Bushings**
9	DEM-9S	DEME-9S	DEMY-9S	DEM-9ST	DEME-9ST	DEMY-9ST
15	DAM-15S	DAME-15S	DAMY-15S	DAM-15ST	DAME-15ST	DAMY-15ST
25	DBM-25S	DBME-25S	DBMY-25S	DBM-25ST	DBME-25ST	DBMY-25ST
37	DCM-37S	DCME-37S	DCMY-37S	DCM-37ST	DCME-37ST	DCMY-37ST
50	DDM-50S	DDME-50S	DDMY-50S	DDM-50ST	DDME-50ST	DDMY-50ST

- .283" footprint uses minimal board space.
- Available with three contact tail lengths (.125", .158", and .185") and two contact diameters (.030" and .040").

Materials

- Mounting bracket: Black nylon. Can be removed if necessary.

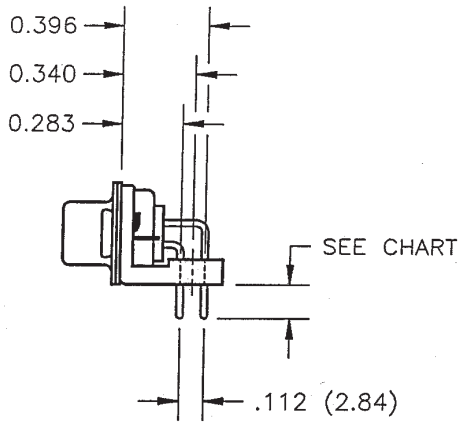

Ordering Information

Right-Angle PCB Plugs

Zinc-Plated Shell with Yellow Chromate Finish

Positions	.125 Tail Length .030 Contact Diameter	.158 Tail Length .030 Contact Diameter	.185 Tail Length .030 Contact Diameter	.125 Tail Length .040 Contact Diameter	.158 Tail Length .040 Contact Diameter	.185 Tail Length .040 Contact Diameter
9	DEM-9PD	DEM-9PL	DEM-9PS	DEM-9PA	DEM-9PG	DEM-9PW
15	DAM-15PD	DAM-15PL	DAM-15PS	DAM-15PA	DAM-15PG	DAM-15PW
25	DBM-25PD	DBM-25PL	DBM-25PS	DBM-25PA	DBM-25PG	DBM-25PW
37	DCM-37PD	DCM-37PL	DCM-37PS	DCM-37PA	DCM-37PG	DCM-37PW

Tin-Plated Shell with Grounding Indents

Positions	.125 Tail Length .030 Contact Diameter	.158 Tail Length .030 Contact Diameter	.185 Tail Length .030 Contact Diameter	.125 Tail Length .040 Contact Diameter	.158 Tail Length .040 Contact Diameter	.185 Tail Length .040 Contact Diameter
9	DEM-9PDTI	DEM-9PLTI	DEM-9PSTI	DEM-9PATI	DEM-9PGTI	DEM-9PWTI
15	DAM-15PDTI	DAM-15PLTI	DAM-15PSTI	DAM-15PATI	DAM-15PGTI	DAM-15PWTI
25	DBM-25PDTI	DBM-25PLTI	DBM-25PSTI	DBM-25PATI	DBM-25PGTI	DBM-25PWTI
37	DCM-37PDTI	DCM-37PLTI	DCM-37PSTI	DCM-37PATI	DCM-37PGTI	DCM-37PWTI

Ordering Information

Right-Angle PCB Sockets

Zinc-Plated Shell with Yellow Chromate Finish

Positions	.125 Tail Length .030 Contact Diameter	.158 Tail Length .030 Contact Diameter	.185 Tail Length .030 Contact Diameter	.125 Tail Length .040 Contact Diameter	.158 Tail Length .040 Contact Diameter	.185 Tail Length .040 Contact Diameter
9	DEM-9SD	DEM-9SL	DEM-9SS	DEM-9SA	DEM-9SG	DEM-9SW
15	DAM-15SD	DAM-15SL	DAM-15SS	DAM-15SA	DAM-15SG	DAM-15SW
25	DBM-25SD	DBM-25SL	DBM-25SS	DBM-25SA	DBM-25SG	DBM-25SW
37	DCM-37SD	DCM-37SL	DCM-37SS	DCM-37SA	DCM-37SG	DCM-37SW

Tin-Plated Shell

Positions	.125 Tail Length .030 Contact Diameter	.158 Tail Length .030 Contact Diameter	.185 Tail Length .030 Contact Diameter	.125 Tail Length .040 Contact Diameter	.158 Tail Length .040 Contact Diameter	.185 Tail Length .040 Contact Diameter
9	DEM-9SDT	DEM-9SLT	DEM-9SST	DEM-9SAT	DEM-9SGT	DEM-9SWT
15	DAM-15SDT	DAM-15SLT	DAM-15SST	DAM-15SAT	DAM-15SGT	DAM-15SWT
25	DBM-25SDT	DBM-25SLT	DBM-25SST	DBM-25SAT	DBM-25SGT	DBM-25SWT
37	DCM-37SDT	DCM-37SLT	DCM-37SST	DCM-37SAT	DCM-37SGT	DCM-37SWT

- Available with three contact tail lengths (.125", .158", and .185") and two contact diameters (.030" and .040").

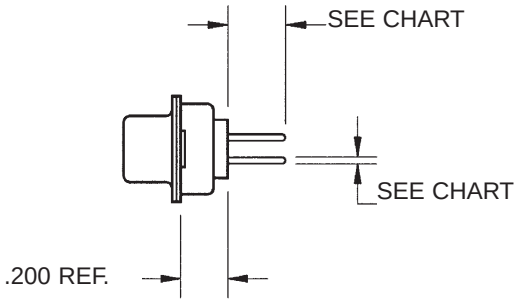

Ordering Information

Vertical PCB Plugs

Zinc-Plated Shell with Yellow Chromate Finish

Positions	.125 Tail Length .030 Contact Diameter	.158 Tail Length .030 Contact Diameter	.185 Tail Length .030 Contact Diameter	.125 Tail Length .040 Contact Diameter	.158 Tail Length .040 Contact Diameter	.185 Tail Length .040 Contact Diameter
9	DEM-9PE	DEM-9PM	DEM-9PZ	DEM-9PB	DEM-9PH	DEM-9PX
15	DAM-15PE	DAM-15PM	DAM-15PZ	DAM-15PB	DAM-15PH	DAM-15PX
25	DBM-25PE	DBM-25PM	DBM-25PZ	DBM-25PB	DBM-25PH	DBM-25PX
37	DCM-37PE	DCM-37PM	DCM-37PZ	DCM-37PB	DCM-37PH	DCM-37PX
50	DDM-50PE	DDM-50PM	DDM-50PZ	DDM-50PB	DDM-50PH	DDM-50PX

Zinc-Plated Shell with Yellow Chromate Finish and 4-40 Clinch Nuts

Positions	.125 Tail Length .030 Contact Diameter	.158 Tail Length .030 Contact Diameter	.185 Tail Length .030 Contact Diameter	.125 Tail Length .040 Contact Diameter	.158 Tail Length .040 Contact Diameter	.185 Tail Length .040 Contact Diameter
9	DEME-9PE	DEME-9PM	DEME-9PZ	DEME-9PB	DEME-9PH	DEME-9PX
15	DAME-15PE	DAME-15PM	DAME-15PZ	DAME-15PB	DAME-15PH	DAME-15PX
25	DBME-25PE	DBME-25PM	DBME-25PZ	DBME-25PB	DBME-25PH	DBME-25PX
37	DCME-37PE	DCME-37PM	DCME-37PZ	DCME-37PB	DCME-37PH	DCME-37PX
50	DDME-50PE	DDME-50PM	DDME-50PZ	DDME-50PB	DDME-50PH	DDME-50PX

Zinc-Plated Shell with Yellow Chromate Finish and Dual Float Bushings

Positions	.125 Tail Length .030 Contact Diameter	.158 Tail Length .030 Contact Diameter	.185 Tail Length .030 Contact Diameter	.125 Tail Length .040 Contact Diameter	.158 Tail Length .040 Contact Diameter	.185 Tail Length .040 Contact Diameter
9	DEMY-9PE	DEMY-9PM	DEMY-9PZ	DEMY-9PB	DEMY-9PH	DEMY-9PX
15	DAMY-15PE	DAMY-15PM	DAMY-15PZ	DAMY-15PB	DAMY-15PH	DAMY-15PX
25	DBMY-25PE	DBMY-25PM	DBMY-25PZ	DBMY-25PB	DBMY-25PH	DBMY-25PX
37	DCMY-37PE	DCMY-37PM	DCMY-37PZ	DCMY-37PB	DCMY-37PH	DCMY-37PX
50	DDMY-50PE	DDMY-50PM	DDMY-50PZ	DDMY-50PB	DDMY-50PH	DDMY-50PX

Ordering Information

Vertical PCB Plugs (Cont'd)

Tin-Plated Shell with Grounding Indents

Positions	.125 Tail Length .030 Contact Diameter	.158 Tail Length .030 Contact Diameter	.185 Tail Length .030 Contact Diameter	.125 Tail Length .040 Contact Diameter	.158 Tail Length .040 Contact Diameter	.185 Tail Length .040 Contact Diameter
9	DEM-9PETI	DEM-9PMTI	DEM-9PZTI	DEM-9PBTI	DEM-9PHTI	DEM-9PXTI
15	DAM-15PETI	DAM-15PMTI	DAM-15PZTI	DAM-15PBTI	DAM-15PHTI	DAM-15PXTI
25	DBM-25PETI	DBM-25PMTI	DBM-25PZTI	DBM-25PBTI	DBM-25PHTI	DBM-25PXTI
37	DCM-37PETI	DCM-37PMTI	DCM-37PZTI	DCM-37PBTI	DCM-37PHTI	DCM-37PXTI
50	DDM-50PETI	DDM-50PMTI	DDM-50PZTI	DDM-50PBTI	DDM-50PHTI	DDM-50PXTI

Tin-Plated Shell with Grounding Indents and 4-40 Clinch Nuts

Positions	.125 Tail Length .030 Contact Diameter	.158 Tail Length .030 Contact Diameter	.185 Tail Length .030 Contact Diameter	.125 Tail Length .040 Contact Diameter	.158 Tail Length .040 Contact Diameter	.185 Tail Length .040 Contact Diameter
9	DEME-9PETI	DEME-9PMTI	DEME-9PZTI	DEME-9PBTI	DEME-9PHTI	DEME-9PXTI
15	DAME-15PETI	DAME-15PMTI	DAME-15PZTI	DAME-15PBTI	DAME-15PHTI	DAME-15PXTI
25	DBME-25PETI	DBME-25PMTI	DBME-25PZTI	DBME-25PBTI	DBME-25PHTI	DBME-25PXTI
37	DCME-37PETI	DCME-37PMTI	DCME-37PZTI	DCME-37PBTI	DCME-37PHTI	DCME-37PXTI
50	DDME-50PETI	DDME-50PMTI	DDME-50PZTI	DDME-50PBTI	DDME-50PHTI	DDME-50PXTI

Tin-Plated Shell with Grounding Indents and Dual Float Bushings

Positions	.125 Tail Length .030 Contact Diameter	.158 Tail Length .030 Contact Diameter	.185 Tail Length .030 Contact Diameter	.125 Tail Length .040 Contact Diameter	.158 Tail Length .040 Contact Diameter	.185 Tail Length .040 Contact Diameter
9	DEMY-9PETI	DEMY-9PMTI	DEMY-9PZTI	DEMY-9PBTI	DEMY-9PHTI	DEMY-9PXTI
15	DAMY-15PETI	DAMY-15PMTI	DAMY-15PZTI	DAMY-15PBTI	DAMY-15PHTI	DAMY-15PXTI
25	DBMY-25PETI	DBMY-25PMTI	DBMY-25PZTI	DBMY-25PBTI	DBMY-25PHTI	DBMY-25PXTI
37	DCMY-37PETI	DCMY-37PMTI	DCMY-37PZTI	DCMY-37PBTI	DCMY-37PHTI	DCMY-37PXTI
50	DDMY-50PETI	DDMY-50PMTI	DDMY-50PZTI	DDMY-50PBTI	DDMY-50PHTI	DDMY-50PXTI

Vertical PCB Sockets

Zinc-Plated Shell with Yellow Chromate Finish

Positions	.125 Tail Length .030 Contact Diameter	.158 Tail Length .030 Contact Diameter	.185 Tail Length .030 Contact Diameter	.125 Tail Length .040 Contact Diameter	.158 Tail Length .040 Contact Diameter	.185 Tail Length .040 Contact Diameter
9	DEM-9SE	DEM-9SM	DEM-9SZ	DEM-9SB	DEM-9SH	DEM-9SX
15	DAM-15SE	DAM-15SM	DAM-15SZ	DAM-15SB	DAM-15SH	DAM-15SX
25	DBM-25SE	DBM-25SM	DBM-25SZ	DBM-25SB	DBM-25SH	DBM-25SX
37	DCM-37SE	DCM-37SM	DCM-37SZ	DCM-37SB	DCM-37SH	DCM-37SX
50	DDM-50SE	DDM-50SM	DDM-50SZ	DDM-50SB	DDM-50SH	DDM-50SX

Ordering Information

Vertical PCB Sockets (Cont'd)

Zinc-Plated Shell with Yellow Chromate Finish and 4-40 Clinch Nuts

Positions	.125 Tail Length .030 Contact Diameter	.158 Tail Length .030 Contact Diameter	.185 Tail Length .030 Contact Diameter	.125 Tail Length .040 Contact Diameter	.158 Tail Length .040 Contact Diameter	.185 Tail Length .040 Contact Diameter
9	DEME-9SE	DEME-9SM	DEME-9SZ	DEME-9SB	DEME-9SH	DEME-9SX
15	DAME-15SE	DAME-15SM	DAME-15SZ	DAME-15SB	DAME-15SH	DAME-15SX
25	DBME-25SE	DBME-25SM	DBME-25SZ	DBME-25SB	DBME-25SH	DBME-25SX
37	DCME-37SE	DCME-37SM	DCME-37SZ	DCME-37SB	DCME-37SH	DCME-37SX
50	DDME-50SE	DDME-50SM	DDME-50SZ	DDME-50SB	DDME-50SH	DDME-50SX

Zinc-Plated Shell with Yellow Chromate Finish and Dual Float Bushings

Positions	.125 Tail Length .030 Contact Diameter	.158 Tail Length .030 Contact Diameter	.185 Tail Length .030 Contact Diameter	.125 Tail Length .040 Contact Diameter	.158 Tail Length .040 Contact Diameter	.185 Tail Length .040 Contact Diameter
9	DEMY-9SE	DEMY-9SM	DEMY-9SZ	DEMY-9SB	DEMY-9SH	DEMY-9SX
15	DAMY-15SE	DAMY-15SM	DAMY-15SZ	DAMY-15SB	DAMY-15SH	DAMY-15SX
25	DBMY-25SE	DBMY-25SM	DBMY-25SZ	DBMY-25SB	DBMY-25SH	DBMY-25SX
37	DCMY-37SE	DCMY-37SM	DCMY-37SZ	DCMY-37SB	DCMY-37SH	DCMY-37SX
50	DDMY-50SE	DDMY-50SM	DDMY-50SZ	DDMY-50SB	DDMY-50SH	DDMY-50SX

Tin-Plated Shell

Positions	.125 Tail Length .030 Contact Diameter	.158 Tail Length .030 Contact Diameter	.185 Tail Length .030 Contact Diameter	.125 Tail Length .040 Contact Diameter	.158 Tail Length .040 Contact Diameter	.185 Tail Length .040 Contact Diameter
9	DEM-9SET	DEM-9SMT	DEM-9SZT	DEM-9SBT	DEM-9SHT	DEM-9SXT
15	DAM-15SET	DAM-15SMT	DAM-15SZT	DAM-15SBT	DAM-15SHT	DAM-15SXT
25	DBM-25SET	DBM-25SMT	DBM-25SZT	DBM-25SBT	DBM-25SHT	DBM-25SXT
37	DCM-37SET	DCM-37SMT	DCM-37SZT	DCM-37SBT	DCM-37SHT	DCM-37SXT
50	DDM-50SET	DDM-50SMT	DDM-50SZT	DDM-50SBT	DDM-50SHT	DDM-50SXT

Tin-Plated Shell with 4-40 Clinch Nuts

Positions	.125 Tail Length .030 Contact Diameter	.158 Tail Length .030 Contact Diameter	.185 Tail Length .030 Contact Diameter	.125 Tail Length .040 Contact Diameter	.158 Tail Length .040 Contact Diameter	.185 Tail Length .040 Contact Diameter
9	DEME-9SET	DEME-9SMT	DEME-9SZT	DEME-9SBT	DEME-9SHT	DEME-9SXT
15	DAME-15SET	DAME-15SMT	DAME-15SZT	DAME-15SBT	DAME-15SHT	DAME-15SXT
25	DBME-25SET	DBME-25SMT	DBME-25SZT	DBME-25SBT	DBME-25SHT	DBME-25SXT
37	DCME-37SET	DCME-37SMT	DCME-37SZT	DCME-37SBT	DCME-37SHT	DCME-37SXT
50	DDME-50SET	DDME-50SMT	DDME-50SZT	DDME-50SBT	DDME-50SHT	DDME-50SXT

Tin-Plated Shell with Dual Float Bushings

Positions	.125 Tail Length .030 Contact Diameter	.158 Tail Length .030 Contact Diameter	.185 Tail Length .030 Contact Diameter	.125 Tail Length .040 Contact Diameter	.158 Tail Length .040 Contact Diameter	.185 Tail Length .040 Contact Diameter
9	DEMY-9SET	DEMY-9SMT	DEMY-9SZT	DEMY-9SBT	DEMY-9SHT	DEMY-9SXT
15	DAMY-15SET	DAMY-15SMT	DAMY-15SZT	DAMY-15SBT	DAMY-15SHT	DAMY-15SXT
25	DBMY-25SET	DBMY-25SMT	DBMY-25SZT	DBMY-25SBT	DBMY-25SHT	DBMY-25SXT
37	DCMY-37SET	DCMY-37SMT	DCMY-37SZT	DCMY-37SBT	DCMY-37SHT	DCMY-37SXT
50	DDMY-50SET	DDMY-50SMT	DDMY-50SZT	DDMY-50SBT	DDMY-50SHT	DDMY-50SXT

D-subminiature Metal Shell - Combination Layout Solder Cup and Vertical PCB Series 1 - High Reliability

Cinch

- Shell Sizes (equivalent to standard size): E (Size 9), A (Size 15), B (Size 25), C (Size 25), and D (Size 25).
- Offered in a variety of combination layouts in vertical style for PCB mount or solder cup style for wire termination.
- Signal Contacts (Size 20) are fixed and non-removable.
  - Vertical Dip Solder Contacts are available with three contact tail lengths (.125", .158", and .185") and two contact diameters (.030" and .040").
- Removable Coaxial, High Power, High Voltage contacts must be ordered separately.
- See Series 1 page 4-48 for specifications.
- Available with 30µin. or 50µin. gold contact plating.

Materials

Connector Shell:

- Steel with zinc or cadmium plating and yellow chromate finish or tin plating (grounding indents on plug).

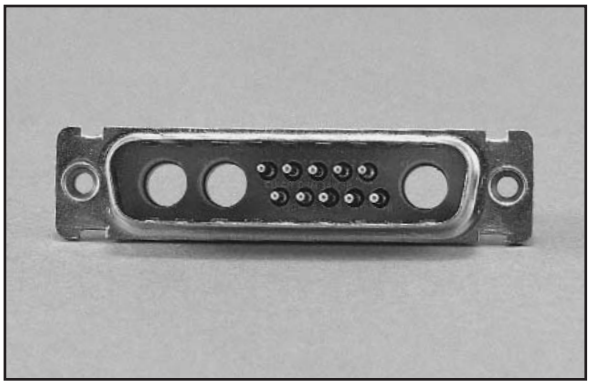

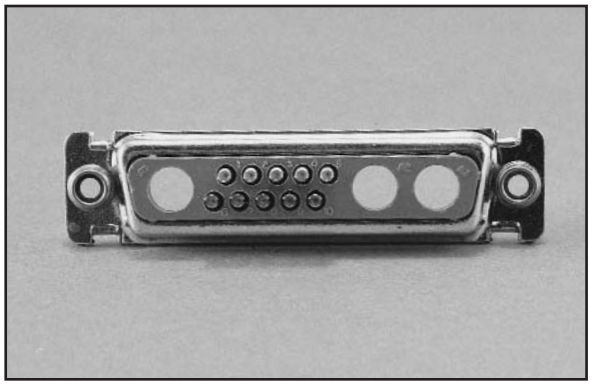

4

Combination Layouts

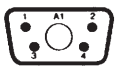
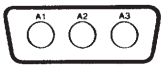
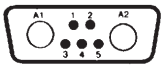
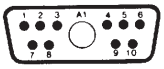

Shell Size	E	A	A	A
Contact Arrangement	5W1	3W3	7W2	11W1
Signal Contacts	4	0	5	10
Coax Cavities	1	1	1	1

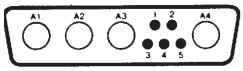
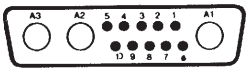
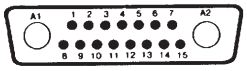
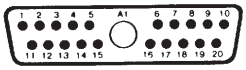

Shell Size	B	B	B	B
Contact Arrangement	9W4	13W3	17W2	21W1
Signal Contacts	5	10	15	20
Coax Cavities	4	3	2	1

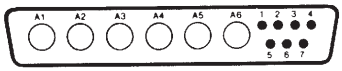
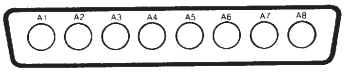
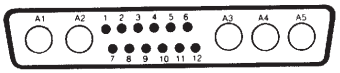

Shell Size	C	C	C
Contact Arrangement	13W6	8W8	17W5
Signal Contacts	7	0	12
Coax Cavities	5	8	5

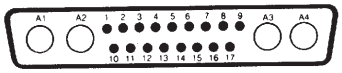
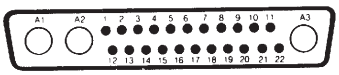
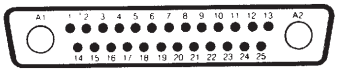

Shell Size	C	C	C
Contact Arrangement	21WA-4	25W3	27W2
Signal Contacts	17	22	25
Coax Cavities	4	3	2

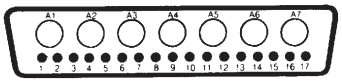
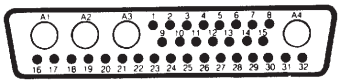
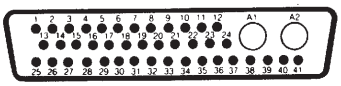

Shell Size	D	D	D
Contact Arrangement	24W7	36W4	43W2
Signal Contacts	25	32	41
Coax Cavities	2	4	2

NOTE: Mating face of plug is shown, socket is mirror image. Position numbers are for male only.

- Will accommodate up to 20 AWG wire.

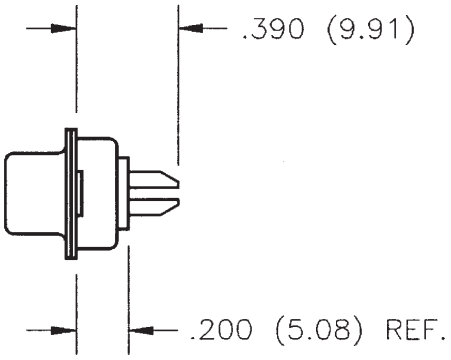

Ordering Information

Combo D-sub Solder Cup Plugs

30µin. Gold Plating

Shell	Zinc-Plated Shell with Yellow Chromate Finish			Tin-Plated Shell with Grounding Indents		
Size	Mounting Holes	4-40 Clinch Nuts	Dual Float Bushings	Mounting Holes	4-40 Clinch Nuts	Dual Float Bushings
E	DEM-XXWX*P	DEME XXWX*P	DEMY-XXWX*P	DEM-XXWX*PTI	DEME-XXWX*PTI	DEMY-XXWX*PTI
A	DAM-XXWX*P	DAME-XXWX*P	DAMY-XXWX*P	DAM-XXWX*PTI	DAME-XXWX*PTI	DAMY-XXWX*PTI
B	DBM-XXWX*P	DBME-XXWX*P	DBMY-XXWX*P	DBM-XXWX*PTI	DBME-XXWX*PTI	DBMY-XXWX*PTI
C	DCM-XXWX*P	DCME-XXWX*P	DCMY-XXWX*P	DCM-XXWX*PTI	DCME-XXWX*PTI	DCMY-XXWX*PTI
D	DDM-XXWX*P	DDME-XXWX*P	DDMY-XXWX*P	DDM-XXWX*PTI	DDME-XXWX*PTI	DDMY-XXWX*PTI

Combo D-sub Solder Cup Sockets

30µin. Gold Plating

Shell	Zinc-Plated Shell with Yellow Chromate Finish			Tin-Plated Shell		
Size	Mounting Holes	4-40 Clinch Nuts	Dual Float Bushings	Mounting Holes	4-40 Clinch Nuts	Dual Float Bushings
E	DEM-XXWX*S	DEME-XXWX*S	DEMY-XXWX*S	DEM-XXWX*ST	DEME-XXWX*ST	DEMY-XXWX*ST
A	DAM-XXWX*S	DAME-XXWX*S	DAMY-XXWX*S	DAM-XXWX*ST	DAME-XXWX*ST	DAMY-XXWX*ST
B	DBM-XXWX*S	DBME-XXWX*S	DBMY-XXWX*S	DBM-XXWX*ST	DBME-XXWX*ST	DBMY-XXWX*ST
C	DCM-XXWX*S	DCME-XXWX*S	DCMY-XXWX*S	DCM-XXWX*ST	DCME-XXWX*ST	DCMY-XXWX*ST
D	DDM-XXWX*S	DDME-XXWX*S	DDMY-XXWX*S	DDM-XXWX*ST	DDME-XXWX*ST	DDMY-XXWX*ST

Combo D-sub Solder Cup Plugs and Sockets

50µin. Gold Plating

Cadmium-Plated Shell with Yellow Chromate Finish

Shell	Plugs			Sockets		
Size	Mounting Holes	4-40 Clinch Nuts	Dual Float Bushings	Mounting Holes	4-40 Clinch Nuts	Dual Float Bushings
E	DEMM-XXWX*P	DEMME-XXWX*P	DEMMY-XXWX*P	DEMM-XXWX*S	DEMME-XXWX*S	DEMMY-XXWX*S
A	DAMM-XXWX*P	DAMME-XXWX*P	DAMMY-XXWX*P	DAMM-XXWX*S	DAMME-XXWX*S	DAMMY-XXWX*S
B	DBMM-XXWX*P	DBMME-XXWX*P	DBMMY-XXWX*P	DBMM-XXWX*S	DBMME-XXWX*S	DBMMY-XXWX*S
C	DCMM-XXWX*P	DCMME-XXWX*P	DCMMY-XXWX*P	DCMM-XXWX*S	DCMME-XXWX*S	DCMMY-XXWX*S
D	DDMM-XXWX*P	DDMME-XXWX*P	DDMMY-XXWX*P	DDMM-XXWX*S	DDMME-XXWX*S	DDMMY-XXWX*S

*Note: XXWX means insert combo layout contact arrangement from page 4-56 in catalog number i.e., 13W3.

D-subminiature Metal Shell - Combination Layout
Vertical PCB Dip Solder Tails
Series 1 - High Reliability

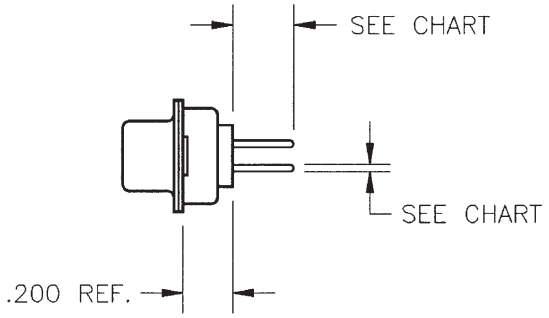

Ordering Information

Combo D-sub Vertical PCB Plugs

30µin. Gold Plating

Zinc-Plated Shell with Yellow Chromate Finish and Mounting Holes

Shell Size	.125 Tail Length .030 Contact Diameter	.158 Tail Length .030 Contact Diameter	.185 Tail Length .030 Contact Diameter	.125 Tail Length .040 Contact Diameter	.158 Tail Length .040 Contact Diameter	.185 Tail Length .040 Contact Diameter
E	DEM-XXWX*PE	DEM-XXWX*PM	DEM-XXWX*PZ	DEM-XXWX*PB	DEM-XXWX*PH	DEM-XXWX*PX
A	DAM-XXWX*PE	DAM-XXWX*PM	DAM-XXWX*PZ	DAM-XXWX*PB	DAM-XXWX*PH	DAM-XXWX*PX
B	DBM-XXWX*PE	DBM-XXWX*PM	DBM-XXWX*PZ	DBM-XXWX*PB	DBM-XXWX*PH	DBM-XXWX*PX
C	DCM-XXWX*PE	DCM-XXWX*PM	DCM-XXWX*PZ	DCM-XXWX*PB	DCM-XXWX*PH	DCM-XXWX*PX
D	DDM-XXWX*PE	DDM-XXWX*PM	DDM-XXWX*PZ	DDM-XXWX*PB	DDM-XXWX*PH	DDM-XXWX*PX

4

Zinc-Plated Shell with Yellow Chromate Finish and 4-40 Clinch Nuts

Shell Size	.125 Tail Length .030 Contact Diameter	.158 Tail Length .030 Contact Diameter	.185 Tail Length .030 Contact Diameter	.125 Tail Length .040 Contact Diameter	.158 Tail Length .040 Contact Diameter	.185 Tail Length .040 Contact Diameter
E	DEME-XXWX*PE	DEME-XXWX*PM	DEME-XXWX*PZ	DEME-XXWX*PB	DEME-XXWX*PH	DEME-XXWX*PX
A	DAME-XXWX*PE	DAME-XXWX*PM	DAME-XXWX*PZ	DAME-XXWX*PB	DAME-XXWX*PH	DAME-XXWX*PX
B	DBME-XXWX*PE	DBME-XXWX*PM	DBME-XXWX*PZ	DBME-XXWX*PB	DBME-XXWX*PH	DBME-XXWX*PX
C	DCME-XXWX*PE	DCME-XXWX*PM	DCME-XXWX*PZ	DCME-XXWX*PB	DCME-XXWX*PH	DCME-XXWX*PX
D	DDME-XXWX*PE	DDME-XXWX*PM	DDME-XXWX*PZ	DDME-XXWX*PB	DDME-XXWX*PH	DDME-XXWX*PX

Zinc-Plated Shell with Yellow Chromate Finish and Dual Float Bushings

Shell Size	.125 Tail Length .030 Contact Diameter	.158 Tail Length .030 Contact Diameter	.185 Tail Length .030 Contact Diameter	.125 Tail Length .040 Contact Diameter	.158 Tail Length .040 Contact Diameter	.185 Tail Length .040 Contact Diameter
E	DEMY-XXWX*PE	DEMY-XXWX*PM	DEMY-XXWX*PZ	DEMY-XXWX*PB	DEMY-XXWX*PH	DEMY-XXWX*PX
A	DAMY-XXWX*PE	DAMY-XXWX*PM	DAMY-XXWX*PZ	DAMY-XXWX*PB	DAMY-XXWX*PH	DAMY-XXWX*PX
B	DBMY-XXWX*PE	DBMY-XXWX*PM	DBMY-XXWX*PZ	DBMY-XXWX*PB	DBMY-XXWX*PH	DBMY-XXWX*PX
C	DCMY-XXWX*PE	DCMY-XXWX*PM	DCMY-XXWX*PZ	DCMY-XXWX*PB	DCMY-XXWX*PH	DCMY-XXWX*PX
D	DDMY-XXWX*PE	DDMY-XXWX*PM	DDMY-XXWX*PZ	DDMY-XXWX*PB	DDMY-XXWX*PH	DDMY-XXWX*PX

Tin-Plated Shell with Grounding Indents and Mounting Holes

Shell Size	.125 Tail Length .030 Contact Diameter	.158 Tail Length .030 Contact Diameter	.185 Tail Length .030 Contact Diameter	.125 Tail Length .040 Contact Diameter	.158 Tail Length .040 Contact Diameter	.185 Tail Length .040 Contact Diameter
E	DEM-XXWX*PETI	DEM-XXWX*PMTI	DEM-XXWX*PZTI	DEM-XXWX*PBTI	DEM-XXWX*PHTI	DEM-XXWX*PXTI
A	DAM-XXWX*PETI	DAM-XXWX*PMTI	DAM-XXWX*PZTI	DAM-XXWX*PBTI	DAM-XXWX*PHTI	DAM-XXWX*PXTI
B	DBM-XXWX*PETI	DBM-XXWX*PMTI	DBM-XXWX*PZTI	DBM-XXWX*PBTI	DBM-XXWX*PHTI	DBM-XXWX*PXTI
C	DCM-XXWX*PETI	DCM-XXWX*PMTI	DCM-XXWX*PZTI	DCM-XXWX*PBTI	DCM-XXWX*PHTI	DCM-XXWX*PXTI
D	DDM-XXWX*PETI	DDM-XXWX*PMTI	DDM-XXWX*PZTI	DDM-XXWX*PBTI	DDM-XXWX*PHTI	DDM-XXWX*PXTI

* Note: XXWX means insert combo layout contact arrangement from page 4-56 in catalog number i.e., 13W3.

Ordering Information

Combo D-sub Vertical PCB Plugs

30µin. Gold Plating (Cont'd)

Tin-Plated Shell with Grounding Indents and 4-40 Clinch Nuts

Shell Size	.125 Tail Length .030 Contact Diameter	.158 Tail Length .030 Contact Diameter	.185 Tail Length .030 Contact Diameter	.125 Tail Length .040 Contact Diameter	.158 Tail Length .040 Contact Diameter	.185 Tail Length .040 Contact Diameter
E	DEME-XXWX*PETI	DEME-XXWX*PMTI	DEME-XXWX*PZTI	DEME-XXWX*PBTI	DEME-XXWX*PHTI	DEME-XXWX*PXTI
A	DAME-XXWX*PETI	DAME-XXWX*PMTI	DAME-XXWX*PZTI	DAME-XXWX*PBTI	DAME-XXWX*PHTI	DAME-XXWX*PXTI
B	DBME-XXWX*PETI	DBME-XXWX*PMTI	DBME-XXWX*PZTI	DBME-XXWX*PBTI	DBME-XXWX*PHTI	DBME-XXWX*PXTI
C	DCME-XXWX*PETI	DCME-XXWX*PMTI	DCME-XXWX*PZTI	DCME-XXWX*PBTI	DCME-XXWX*PHTI	DCME-XXWX*PXTI
D	DDME-XXWX*PETI	DDME-XXWX*PMTI	DDME-XXWX*PZTI	DDME-XXWX*PBTI	DDME-XXWX*PHTI	DDME-XXWX*PXTI

Tin-Plated Shell with Grounding Indents and Dual Float Bushings

Shell Size	.125 Tail Length .030 Contact Diameter	.158 Tail Length .030 Contact Diameter	.185 Tail Length .030 Contact Diameter	.125 Tail Length .040 Contact Diameter	.158 Tail Length .040 Contact Diameter	.185 Tail Length .040 Contact Diameter
E	DEMY-XXWX*PETI	DEMY-XXWX*PMTI	DEMY-XXWX*PZTI	DEMY-XXWX*PBTI	DEMY-XXWX*PHTI	DEMY-XXWX*PXTI
A	DAMY-XXWX*PETI	DAMY-XXWX*PMTI	DAMY-XXWX*PZTI	DAMY-XXWX*PBTI	DAMY-XXWX*PHTI	DAMY-XXWX*PXTI
B	DBMY-XXWX*PETI	DBMY-XXWX*PMTI	DBMY-XXWX*PZTI	DBMY-XXWX*PBTI	DBMY-XXWX*PHTI	DBMY-XXWX*PXTI
C	DCMY-XXWX*PETI	DCMY-XXWX*PMTI	DCMY-XXWX*PZTI	DCMY-XXWX*PBTI	DCMY-XXWX*PHTI	DCMY-XXWX*PXTI
D	DDMY-XXWX*PETI	DDMY-XXWX*PMTI	DDMY-XXWX*PZTI	DDMY-XXWX*PBTI	DDMY-XXWX*PHTI	DDMY-XXWX*PXTI

50µin. Gold Plating

Cadmium-Plated Shell with Yellow Chromate Finish and Mounting Holes

Shell Size	.125 Tail Length .030 Contact Diameter	.158 Tail Length .030 Contact Diameter	.185 Tail Length .030 Contact Diameter	.125 Tail Length .040 Contact Diameter	.158 Tail Length .040 Contact Diameter	.185 Tail Length .040 Contact Diameter
E	DEMM-XXWX*PE	DEMM-XXWX*PM	DEMM-XXWX*PZ	DEMM-XXWX*PB	DEMM-XXWX*PH	DEMM-XXWX*PX
A	DAMM-XXWX*PE	DAMM-XXWX*PM	DAMM-XXWX*PZ	DAMM-XXWX*PB	DAMM-XXWX*PH	DAMM-XXWX*PX
B	DBMM-XXWX*PE	DBMM-XXWX*PM	DBMM-XXWX*PZ	DBMM-XXWX*PB	DBMM-XXWX*PH	DBMM-XXWX*PX
C	DCMM-XXWX*PE	DCMM-XXWX*PM	DCMM-XXWX*PZ	DCMM-XXWX*PB	DCMM-XXWX*PH	DCMM-XXWX*PX
D	DDMM-XXWX*PE	DDMM-XXWX*PM	DDMM-XXWX*PZ	DDMM-XXWX*PB	DDMM-XXWX*PH	DDMM-XXWX*PX

Cadmium-Plated Shell with Yellow Chromate Finish and 4-40 Clinch Nuts

Shell Size	.125 Tail Length .030 Contact Diameter	.158 Tail Length .030 Contact Diameter	.185 Tail Length .030 Contact Diameter	.125 Tail Length .040 Contact Diameter	.158 Tail Length .040 Contact Diameter	.185 Tail Length .040 Contact Diameter
E	DEMME-XXWX*PE	DEMME-XXWX*PM	DEMME-XXWX*PZ	DEMME-XXWX*PB	DEMME-XXWX*PH	DEMME-XXWX*PX
A	DAMME-XXWX*PE	DAMME-XXWX*PM	DAMME-XXWX*PZ	DAMME-XXWX*PB	DAMME-XXWX*PH	DAMME-XXWX*PX
B	DBMME-XXWX*PE	DBMME-XXWX*PM	DBMME-XXWX*PZ	DBMME-XXWX*PB	DBMME-XXWX*PH	DBMME-XXWX*PX
C	DCMME-XXWX*PE	DCMME-XXWX*PM	DCMME-XXWX*PZ	DCMME-XXWX*PB	DCMME-XXWX*PH	DCMME-XXWX*PX
D	DDMME-XXWX*PE	DDMME-XXWX*PM	DDMME-XXWX*PZ	DDMME-XXWX*PB	DDMME-XXWX*PH	DDMME-XXWX*PX

Cadmium-Plated Shell with Yellow Chromate Finish and Dual Float Bushings

Shell Size	.125 Tail Length .030 Contact Diameter	.158 Tail Length .030 Contact Diameter	.185 Tail Length .030 Contact Diameter	.125 Tail Length .040 Contact Diameter	.158 Tail Length .040 Contact Diameter	.185 Tail Length .040 Contact Diameter
E	DEMMY-XXWX*PE	DEMMY-XXWX*PM	DEMMY-XXWX*PZ	DEMMY-XXWX*PB	DEMMY-XXWX*PH	DEMMY-XXWX*PX
A	DAMMY-XXWX*PE	DAMMY-XXWX*PM	DAMMY-XXWX*PZ	DAMMY-XXWX*PB	DAMMY-XXWX*PH	DAMMY-XXWX*PX
B	DBMMY-XXWX*PE	DBMMY-XXWX*PM	DBMMY-XXWX*PZ	DBMMY-XXWX*PB	DBMMY-XXWX*PH	DBMMY-XXWX*PX
C	DCMMY-XXWX*PE	DCMMY-XXWX*PM	DCMMY-XXWX*PZ	DCMMY-XXWX*PB	DCMMY-XXWX*PH	DCMMY-XXWX*PX
D	DDMMY-XXWX*PE	DDMMY-XXWX*PM	DDMMY-XXWX*PZ	DDMMY-XXWX*PB	DDMMY-XXWX*PH	DDMMY-XXWX*PX

*Note: XXWX means insert combo layout contact arrangement from page 4-56 in catalog number i.e., 13W3.

Ordering Information

Combo D-sub Vertical PCB Sockets

30µin. Gold Plating

Zinc-Plated Shell with Yellow Chromate Finish and Mounting Holes

Shell Size	.125 Tail Length .030 Contact Diameter	.158 Tail Length .030 Contact Diameter	.185 Tail Length .030 Contact Diameter	.125 Tail Length .040 Contact Diameter	.158 Tail Length .040 Contact Diameter	.185 Tail Length .040 Contact Diameter
E	DEM-XXWX*SE	DEM-XXWX*SM	DEM-XXWX*SZ	DEM-XXWX*SB	DEM-XXWX*SH	DEM-XXWX*SX
A	DAM-XXWX*SE	DAM-XXWX*SM	DAM-XXWX*SZ	DAM-XXWX*SB	DAM-XXWX*SH	DAM-XXWX*SX
B	DBM-XXWX*SE	DBM-XXWX*SM	DBM-XXWX*SZ	DBM-XXWX*SB	DBM-XXWX*SH	DBM-XXWX*SX
C	DCM-XXWX*SE	DCM-XXWX*SM	DCM-XXWX*SZ	DCM-XXWX*SB	DCM-XXWX*SH	DCM-XXWX*SX
D	DDM-XXWX*SE	DDM-XXWX*SM	DDM-XXWX*SZ	DDM-XXWX*SB	DDM-XXWX*SH	DDM-XXWX*SX

Zinc-Plated Shell with Yellow Chromate Finish and 4-40 Clinch Nuts

Shell Size	.125 Tail Length .030 Contact Diameter	.158 Tail Length .030 Contact Diameter	.185 Tail Length .030 Contact Diameter	.125 Tail Length .040 Contact Diameter	.158 Tail Length .040 Contact Diameter	.185 Tail Length .040 Contact Diameter
E	DEME-XXWX*SE	DEME-XXWX*SM	DEME-XXWX*SZ	DEME-XXWX*SB	DEME-XXWX*SH	DEME-XXWX*SX
A	DAME-XXWX*SE	DAME-XXWX*SM	DAME-XXWX*SZ	DAME-XXWX*SB	DAME-XXWX*SH	DAME-XXWX*SX
B	DBME-XXWX*SE	DBME-XXWX*SM	DBME-XXWX*SZ	DBME-XXWX*SB	DBME-XXWX*SH	DBME-XXWX*SX
C	DCME-XXWX*SE	DCME-XXWX*SM	DCME-XXWX*SZ	DCME-XXWX*SB	DCME-XXWX*SH	DCME-XXWX*SX
D	DDME-XXWX*SE	DDME-XXWX*SM	DDME-XXWX*SZ	DDME-XXWX*SB	DDME-XXWX*SH	DDME-XXWX*SX

Zinc-Plated Shell with Yellow Chromate Finish and Dual Float Bushings

Shell Size	.125 Tail Length .030 Contact Diameter	.158 Tail Length .030 Contact Diameter	.185 Tail Length .030 Contact Diameter	.125 Tail Length .040 Contact Diameter	.158 Tail Length .040 Contact Diameter	.185 Tail Length .040 Contact Diameter
E	DEMY-XXWX*SE	DEMY-XXWX*SM	DEMY-XXWX*SZ	DEMY-XXWX*SB	DEMY-XXWX*SH	DEMY-XXWX*SX
A	DAMY-XXWX*SE	DAMY-XXWX*SM	DAMY-XXWX*SZ	DAMY-XXWX*SB	DAMY-XXWX*SH	DAMY-XXWX*SX
B	DBMY-XXWX*SE	DBMY-XXWX*SM	DBMY-XXWX*SZ	DBMY-XXWX*SB	DBMY-XXWX*SH	DBMY-XXWX*SX
C	DCMY-XXWX*SE	DCMY-XXWX*SM	DCMY-XXWX*SZ	DCMY-XXWX*SB	DCMY-XXWX*SH	DCMY-XXWX*SX
D	DDMY-XXWX*SE	DDMY-XXWX*SM	DDMY-XXWX*SZ	DDMY-XXWX*SB	DDMY-XXWX*SH	DDMY-XXWX*SX

Tin-Plated Shell with Mounting Holes

Shell Size	.125 Tail Length .030 Contact Diameter	.158 Tail Length .030 Contact Diameter	.185 Tail Length .030 Contact Diameter	.125 Tail Length .040 Contact Diameter	.158 Tail Length .040 Contact Diameter	.185 Tail Length .040 Contact Diameter
E	DEM-XXWX*SET	DEM-XXWX*SMT	DEM-XXWX*SZT	DEM-XXWX*SBT	DEM-XXWX*SHT	DEM-XXWX*SXT
A	DAM-XXWX*SET	DAM-XXWX*SMT	DAM-XXWX*SZT	DAM-XXWX*SBT	DAM-XXWX*SHT	DAM-XXWX*SXT
B	DBM-XXWX*SET	DBM-XXWX*SMT	DBM-XXWX*SZT	DBM-XXWX*SBT	DBM-XXWX*SHT	DBM-XXWX*SXT
C	DCM-XXWX*SET	DCM-XXWX*SMT	DCM-XXWX*SZT	DCM-XXWX*SBT	DCM-XXWX*SHT	DCM-XXWX*SXT
D	DDM-XXWX*SET	DDM-XXWX*SMT	DDM-XXWX*SZT	DDM-XXWX*SBT	DDM-XXWX*SHT	DDM-XXWX*SXT

* Note: XXWX means insert combo layout contact arrangement from page 4-56 in catalog number i.e., 13W3.

Ordering Information

Combo D-sub Vertical PCB Sockets (Cont'd)

30µin. Gold Plating (Cont'd)

Tin-Plated Shell with 4-40 Clinch Nuts

Shell Size	.125 Tail Length .030 Contact Diameter	.158 Tail Length .030 Contact Diameter	.185 Tail Length .030 Contact Diameter	.125 Tail Length .040 Contact Diameter	.158 Tail Length .040 Contact Diameter	.185 Tail Length .040 Contact Diameter
E	DEME-XXWX*SET	DEME-XXWX*SMT	DEME-XXWX*SZT	DEME-XXWX*SBT	DEME-XXWX*SHT	DEME-XXWX*SXT
A	DAME-XXWX*SET	DAME-XXWX*SMT	DAME-XXWX*SZT	DAME-XXWX*SBT	DAME-XXWX*SHT	DAME-XXWX*SXT
B	DBME-XXWX*SET	DBME-XXWX*SMT	DBME-XXWX*SZT	DBME-XXWX*SBT	DBME-XXWX*SHT	DBME-XXWX*SXT
C	DCME-XXWX*SET	DCME-XXWX*SMT	DCME-XXWX*SZT	DCME-XXWX*SBT	DCME-XXWX*SHT	DCME-XXWX*SXT
D	DDME-XXWX*SET	DDME-XXWX*SMT	DDME-XXWX*SZT	DDME-XXWX*SBT	DDME-XXWX*SHT	DDME-XXWX*SXT

Tin-Plated Shell and Dual Float Bushings

Shell Size	.125 Tail Length .030 Contact Diameter	.158 Tail Length .030 Contact Diameter	.185 Tail Length .030 Contact Diameter	.125 Tail Length .040 Contact Diameter	.158 Tail Length .040 Contact Diameter	.185 Tail Length .040 Contact Diameter
E	DEMY-XXWX*SET	DEMY-XXWX*SMT	DEMY-XXWX*SZT	DEMY-XXWX*SBT	DEMY-XXWX*SHT	DEMY-XXWX*SXT
A	DAMY-XXWX*SET	DAMY-XXWX*SMT	DAMY-XXWX*SZT	DAMY-XXWX*SBT	DAMY-XXWX*SHT	DAMY-XXWX*SXT
B	DBMY-XXWX*SET	DBMY-XXWX*SMT	DBMY-XXWX*SZT	DBMY-XXWX*SBT	DBMY-XXWX*SHT	DBMY-XXWX*SXT
C	DCMY-XXWX*SET	DCMY-XXWX*SMT	DCMY-XXWX*SZT	DCMY-XXWX*SBT	DCMY-XXWX*SHT	DCMY-XXWX*SXT
D	DDMY-XXWX*SET	DDMY-XXWX*SMT	DDMY-XXWX*SZT	DDMY-XXWX*SBT	DDMY-XXWX*SHT	DDMY-XXWX*SXT

50µin. Gold Plating

Cadmium-Plated Shell with Yellow Chromate Finish and Mounting Holes

Shell Size	.125 Tail Length .030 Contact Diameter	.158 Tail Length .030 Contact Diameter	.185 Tail Length .030 Contact Diameter	.125 Tail Length .040 Contact Diameter	.158 Tail Length .040 Contact Diameter	.185 Tail Length .040 Contact Diameter
E	DEMM-XXWX*SE	DEMM-XXWX*SM	DEMM-XXWX*SZ	DEMM-XXWX*SB	DEMM-XXWX*SH	DEMM-XXWX*SX
A	DAMM-XXWX*SE	DAMM-XXWX*SM	DAMM-XXWX*SZ	DAMM-XXWX*SB	DAMM-XXWX*SH	DAMM-XXWX*SX
B	DBMM-XXWX*SE	DBMM-XXWX*SM	DBMM-XXWX*SZ	DBMM-XXWX*PB	DBMM-XXWX*SH	DBMM-XXWX*SX
C	DCMM-XXWX*SE	DCMM-XXWX*SM	DCMM-XXWX*SZ	DCMM-XXWX*SB	DCMM-XXWX*SH	DCMM-XXWX*SX
D	DDMM-XXWX*SE	DDMM-XXWX*SM	DDMM-XXWX*SZ	DDMM-XXWX*SB	DDMM-XXWX*SH	DDMM-XXWX*SX

Cadmium-Plated Shell with Yellow Chromate Finish and 4-40 Clinch Nuts

Shell Size	.125 Tail Length .030 Contact Diameter	.158 Tail Length .030 Contact Diameter	.185 Tail Length .030 Contact Diameter	.125 Tail Length .040 Contact Diameter	.158 Tail Length .040 Contact Diameter	.185 Tail Length .040 Contact Diameter
E	DEMME-XXWX*SE	DEMME-XXWX*SM	DEMME-XXWX*SZ	DEMME-XXWX*SB	DEMME-XXWX*SH	DEMME-XXWX*SX
A	DAMME-XXWX*SE	DAMME-XXWX*SM	DAMME-XXWX*SZ	DAMME-XXWX*SB	DAMME-XXWX*SH	DAMME-XXWX*SX
B	DBMME-XXWX*SE	DBMME-XXWX*SM	DBMME-XXWX*SZ	DBMME-XXWX*SB	DBMME-XXWX*SH	DBMME-XXWX*SX
C	DCMME-XXWX*SE	DCMME-XXWX*SM	DCMME-XXWX*SZ	DCMME-XXWX*SB	DCMME-XXWX*SH	DCMME-XXWX*SX
D	DDMME-XXWX*SE	DDMME-XXWX*SM	DDMME-XXWX*SZ	DDMME-XXWX*SB	DDMME-XXWX*SH	DDMME-XXWX*SX

Cadmium-Plated Shell with Yellow Chromate Finish and Dual Float Bushings

Shell Size	.125 Tail Length .030 Contact Diameter	.158 Tail Length .030 Contact Diameter	.185 Tail Length .030 Contact Diameter	.125 Tail Length .040 Contact Diameter	.158 Tail Length .040 Contact Diameter	.185 Tail Length .040 Contact Diameter
E	DEMMY-XXWX*SE	DEMMY-XXWX*SM	DEMMY-XXWX*SZ	DEMMY-XXWX*SB	DEMMY-XXWX*SH	DEMMY-XXWX*SX
A	DAMMY-XXWX*SE	DAMMY-XXWX*SM	DAMMY-XXWX*SZ	DAMMY-XXWX*SB	DAMMY-XXWX*SH	DAMMY-XXWX*SX
B	DBMMY-XXWX*SE	DBMMY-XXWX*SM	DBMMY-XXWX*SZ	DBMMY-XXWX*SB	DBMMY-XXWX*SH	DBMMY-XXWX*SX
C	DCMMY-XXWX*SE	DCMMY-XXWX*SM	DCMMY-XXWX*SZ	DCMMY-XXWX*SB	DCMMY-XXWX*SH	DCMMY-XXWX*SX
D	DDMMY-XXWX*SE	DDMMY-XXWX*SM	DDMMY-XXWX*SZ	DDMMY-XXWX*SB	DDMMY-XXWX*SH	DDMMY-XXWX*SX

*Note: XXWX means insert combo layout contact arrangement from page 4-56 in catalog number i.e., 13W3.

D-subminiature Contacts
Coaxial - High Power - High Voltage

Cinch

FEATURES

- ***Available in Coaxial (50Ω and 75Ω), High-Voltage, and High-Power styles.***
- ***Cable termination and PCB mount contacts are available in right-angle and straight plugs and receptacles.***
- ***Precision screw machine construction results in uniform contact impedance and excellent contact retention.***
- ***Available with 30µin. or 50µin. gold contact plating.***
- ***Cable braid can be soldered or crimped.***
- ***See pages 4-55 thru 4-61 for Cinch combination layout D-subminiature connectors.***

Termination Tooling

- No tools are required for coaxial contact insertion. Contacts snap into connector. Coaxial and high-voltage contact extraction tool #CET-C6B for removing contacts after termination. See page 4-103.
- Tool to crimp sleeve over cable braid: Use 3-cavity die #CCD-26 with crimp frame #FCT-552. See page 4-103.

NOTE: In order to determine which contact to use with a cable wire not specifically listed:

- Check the style of contact required: straight or right-angle, solder braid or crimp braid, etc.
- Refer to the cable wire manufacturer's specifications to determine:
  - The O.D. of the insulator.
  - The O.D. of the jacket.
- Compare the above with the corresponding dimensions C and E in the straight contacts and dimensions B and C in the right-angle contacts.

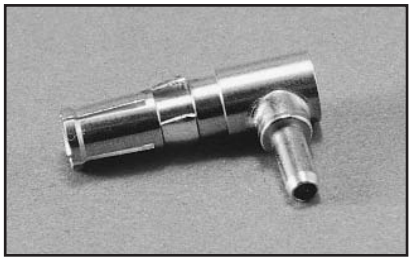
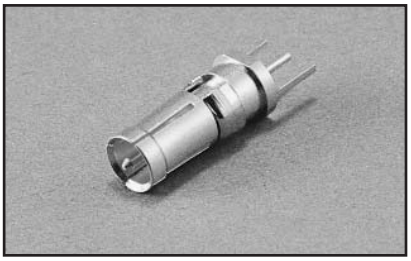

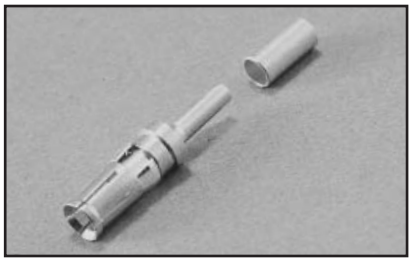
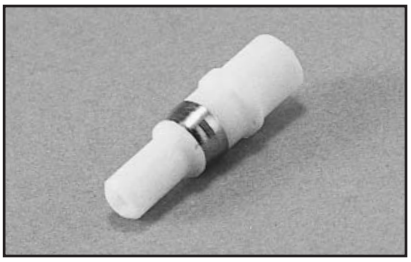

D-subminiature Contacts
Coaxial - 50Ω
Right-Angle and Straight

Cinch

Materials

- Receptacle: Body - Beryllium copper, Insulator - Teflon, Contacts - Brass.
- Plug: Body - Brass, Insulator - Teflon, Contacts - Beryllium copper.
- Plating: 30µin. gold over nickel, 50µin. gold over copper.

Electrical Characteristics

Dielectric Withstanding Voltage:

- Cable Contacts: minimum AC 1000V RMS @ sea level.
- PCB Contacts: minimum AC 800V RMS @ sea level.

Frequency Range: 0-900 MHz.

Right-Angle

Plug

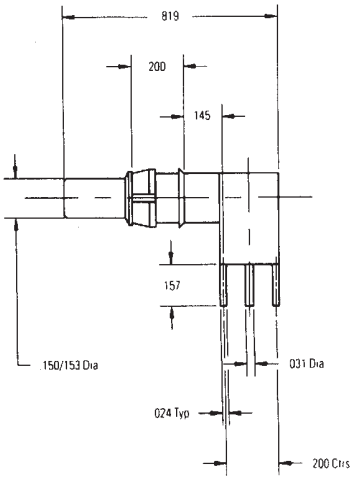

Receptacle

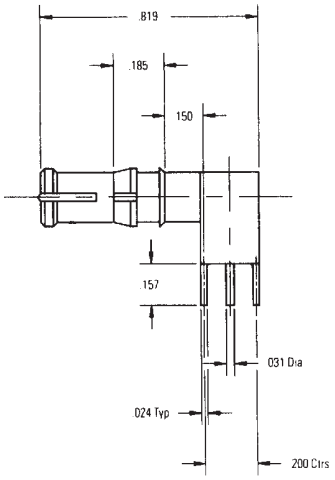

Straight

Plug

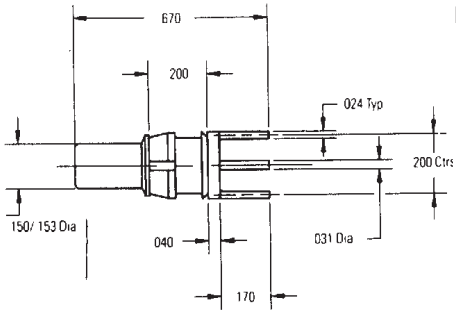

Receptacle

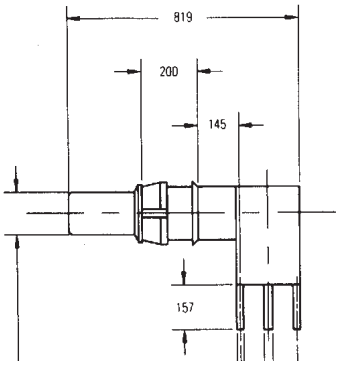

Ordering Information

Right-Angle PCB Coaxial Contacts - 50Ω

	30µin. Gold	50µin. Gold
Plug	DM53761-30	DM53761-50
Recept.	DM53763-30	DM53763-50

Straight PCB Coaxial Contacts - 50Ω

	30µin. Gold	50µin. Gold
Plug	DM53760-30	DM53760-50
Recept.	DM53762-30	DM53762-50

- Material and electrical specifications: See page 4-63.

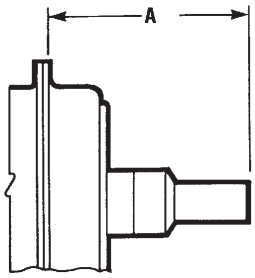

Plug

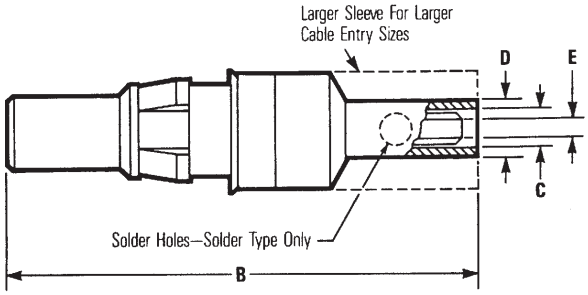

Receptacle

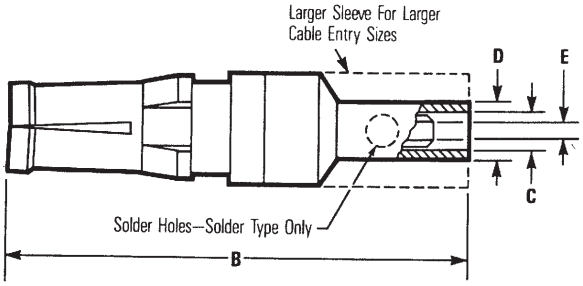

4

Ordering Information

Straight Solder Braid Coaxial Contacts

			A Max.		B Ref.		C		D		E ±.005"		RG Cable	
	30µin. Gold	50µin. Gold	in	mm	in	mm	in	mm	in	mm	in	mm	Old	New
Plug	DM53740-5008	DM53740-5105	.739	18.77	0.929	23.60	.093	2.36	.124	3.15	.040	1.02	196/U	178B/U
Plug	DM53740-5001	DM53740-5099	.739	18.77	0.929	23.60	.125	3.18	.152	3.86	.067	1.70	187/U	179B/U
Plug	DM53740-5002	DM53740-5104	.847	21.51	1.037	26.34	.202	5.13	.235	5.97	.110	2.79	195/U	180B/U
Plug	DM53740-5005	DM53740-5101	.847	21.51	1.037	26.34	.202	5.13	.235	5.97	.125	3.18	58/U	58B/U
Recept.	DM53742-5006	DM53742-5092	.739	18.77	0.929	23.60	.093	2.36	.124	3.15	.040	1.02	196/U	178B/U
Recept.	DM53742-5001	DM53742-5089	.739	18.77	0.929	23.60	.125	3.18	.152	3.86	.067	1.70	187/U	179B/U
Recept.	DM53742-5002	DM53742-5091	.847	21.51	1.037	26.34	.202	5.13	.235	5.97	.110	2.79	195/U	180B/U
Recept.	DM53742-5004	DM53742-5086	.847	21.51	1.037	26.34	.202	5.13	.235	5.97	.125	3.18	58/U	58B/U
Plug	DM53740-5000	DM53740-5100	.670	17.02	0.860	21.84	.093	2.36	.124	3.15	.040	1.02	196/U	178B/U
Recept.	DM53742-5000	DM53742-5085	.670	17.02	0.860	21.84	.093	2.36	.124	3.15	.040	1.02	196/U	178B/U

Straight Crimp Braid Coaxial Contacts

			A Max.		B Ref.		C		D		E ±.005"		RG Cable	
	30µin. Gold	50µin. Gold	in	mm	in	mm	in	mm	in	mm	in	mm	Old	New
Plug	DM53740	DM53740-17	.739	18.77	.929	23.60	.093	2.36	.124	3.15	.040	1.02	196/U	178B/U
Plug	DM53740-1	DM53740-15	.739	18.77	.929	23.60	.125	3.18	.152	3.86	.067	1.70	187/U	179B/U
Plug	DM53740-3	DM53740-16	.847	21.51	1.037	26.34	.202	5.13	.235	5.97	.110	2.79	195/U	180B/U
Plug	DM53740-5	DM53740-18	.847	21.51	1.037	26.34	.202	5.13	.235	5.97	.125	3.18	58/U	58B/U
Recept.	DM53742	DM53742-18	.739	18.77	.929	23.60	.093	2.36	.124	3.15	.040	1.02	196/U	178B/U
Recept.	DM53742-1	DM53742-16	.739	18.77	.929	23.60	.125	3.18	.152	3.86	.067	1.70	187/U, 188/U	179B/U, 316/BU
Recept.	DM53742-3	DM53742-17	.847	21.51	1.037	26.34	.202	5.13	.235	5.97	.110	2.79	195/U	180B/U
Recept.	DM53742-5	DM53742-19	.847	21.51	1.037	26.34	.202	5.13	.235	5.97	.125	3.18	58/U	58B/U

- Material and electrical specifications: See page 4-63.

Plug

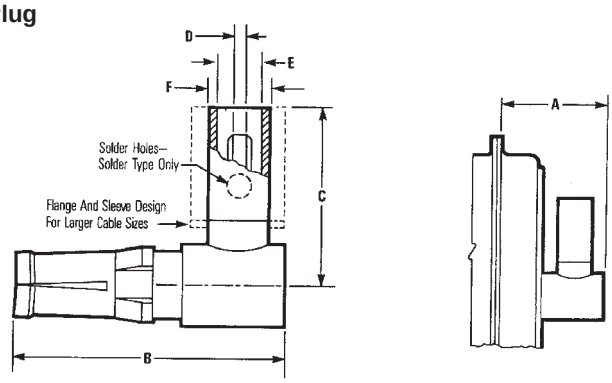

Receptacle

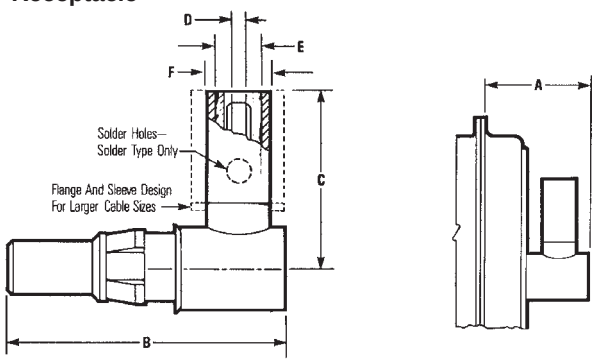

Right-Angle Solder Braid Coaxial Contacts - 50Ω

		A		B		C		D		E		F		RG Cable	
30µin. Gold	50µin. Gold	in	mm	in	mm	in	mm	in	mm	in	mm	in	mm	Old	New
Plugs															
DM53741-5000	DM53741-5059	.530	13.46	.734	18.64	.492	12.50	.040	1.02	.093	2.36	.125	3.18	RG 196/U	RG 178B/U
DM53741-5001	DM53741-5062	.530	13.46	.734	18.64	.492	12.50	.067	1.70	.125	3.18	.152	3.86	RG 187/U	RG 179B/U, RG 316B/U
DM53741-5003	DM53741-5063	.530	13.46	.734	18.64	.601	15.27	.110	2.79	.202	5.13	.235	5.97	RG 195/U	RG 180B/U
DM53741-5004	DM53741-5060	.530	13.46	.734	18.64	.601	15.27	.125	3.18	.202	5.13	.235	5.97	RG 196/U	RG 58B/U
Receptacles															
DM53743-5000	DM53743-5073	.530	13.46	.734	18.64	.492	12.50	.040	1.02	.093	2.36	.125	3.18	RG 196/U	RG 178B/U
DM53743-5001	DM53743-5076	.530	13.46	.734	18.64	.492	12.50	.067	1.70	.125	3.18	.152	3.86	RG 187/U	RG 179B/U, RG 316B/U
DM53743-5003	DM53743-5077	.530	13.46	.734	18.64	.601	15.27	.110	2.79	.202	5.13	.235	5.97	RG 195/U	RG 180B/U
DM53743-5004	DM53743-5074	.530	13.46	.734	18.64	.601	15.27	.125	3.18	.202	5.13	.235	5.97	RG 58/U	RG 58B/U

Right-Angle Crimp Braid Coaxial Contacts - 50Ω

		A		B		C		D		E		F		RG Cable	
30µin. Gold	50µin. Gold	in	mm	in	mm	in	mm	in	mm	in	mm	in	mm	Old	New
Plugs															
DM53741-0	DM53741-12	.530	13.46	.734	18.64	.492	12.50	.040	1.02	.093	2.36	.125	3.18	RG 196/U	RG 178B/U
DM53741-1	DM53741-11	.530	13.46	.734	18.64	.492	12.50	.067	1.70	.125	3.18	.152	3.86	RG 187/U RG 188/U	RG 179B/U, RG 316B/U
DM53741-3	DM53741-10	.530	13.46	.734	18.64	.601	15.27	.110	2.79	.202	5.13	.235	5.97	RG 195/U	RG 180B/U
DM53741-4	DM53741-13	.530	13.46	.734	18.64	.601	15.27	.125	3.18	.202	5.13	.235	5.97	RG 58/U	RG 58B/U
Receptacles															
DM53743-2	DM53743-18	.530	13.46	.734	18.64	.492	12.50	.040	1.02	.093	2.36	.125	3.18	RG 196/U	RG 178B/U
DM53743-3	DM53743-16	.530	13.46	.734	18.64	.492	12.50	.067	1.70	.125	3.18	.152	3.86	RG 187/U RG 188/U	RG 179B/U, RG 316B/U
DM53743-5	DM53743-17	.530	13.46	.734	18.64	.601	15.27	.110	2.79	.202	5.13	.235	5.97	RG 195/U	RG 180B/U
DM53743-6	DM53743-19	.530	13.46	.734	18.64	.601	15.27	.125	3.18	.202	5.13	.235	5.97	RG 58/U	RG 58B/U

D-subminiature Contacts
Coaxial - 75Ω
Straight

Cinch

Materials

- Receptacle: Body - Brass or beryllium copper, Insulator - Teflon, Contacts - Brass.
- Plug: Body - Brass, Insulator - Teflon, Contacts - Beryllium copper.
- Plating: 30µin. gold over nickel, 50µin. gold over copper

Electrical Characteristics

Nominal Impedance: 75Ω.
Dielectric Withstanding Voltage: Minimum 1000V RMS @ sea level.
VWSR: 1.05 max. for 0-1 GHz and 1.25 max for 1-2 GHz

Plug

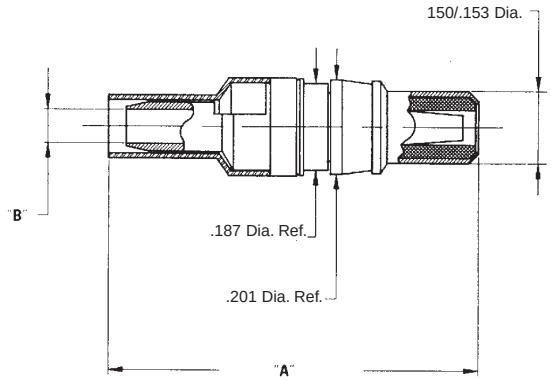

Receptacle

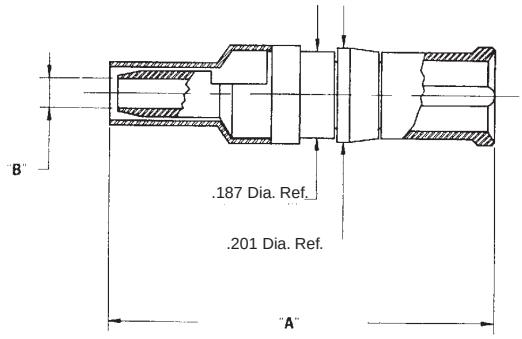

4

Ordering Information

75Ω Crimp/Solder Termination Straight Coaxial Contacts

			A		B			
	30µin. Gold	50µin. Gold	in	mm	in	mm	Material	Cable
Plug	DM53750-12	DM53750-52	1.037	26.34	.108	2.74	Brass	Belden 8218
Plug	DM53750-11	DM53750-51	0.929	23.60	.067	1.70	Brass	RG 179 B/U
Recept.	DM53752-8	DM53752-58	1.037	26.34	.108	2.74	Brass	Belden 8218
Recept.	DM53752-7	DM53752-57	0.929	23.60	.067	1.70	Brass	RG 179 B/U
Recept.	DM53752-6	DM53752-56	1.037	26.34	.108	2.74	Beryllium Copper	Belden 8218
Recept.	DM53752-5	DM53752-55	0.929	23.60	.067	1.70	Beryllium Copper	RG 179 B/U

75Ω Crimp/Crimp Termination Straight Coaxial Contacts

			A		B			
	30µin. Gold	50µin. Gold	in	mm	in	mm	Material	Cable
Plug	DM53750-010	DM53750-510	1.050	26.67	.108	2.74	Brass	Belden 8218
Plug	DM53750-009	DM53750-509	1.050	26.67	.067	1.70	Brass	RG 179 B/U
Recept.	DM53752-004	DM53752-504	1.090	27.69	.108	2.74	Brass	Belden 8218
Recept.	DM53752-003	DM53752-503	1.090	27.69	.067	1.70	Brass	RG 179 B/U
Recept.	DM53752-002	DM53752-502	1.090	27.69	.108	2.74	Beryllium Copper	Belden 8218
Recept.	DM53752-001	DM53752-501	1.090	27.69	.067	1.70	Beryllium Copper	RG 179 B/U

Materials

- Contact: Body - Nylon per MIL-P-20693
- Plating: 30µin. gold over nickel, 50µin. gold over copper

Electrical Characteristics

Dielectric Withstanding Voltage: Minimum AC 2800VAC RMS to shell @ sea level

High-Voltage Contacts - For #20 AWG wire

Straight

Plug

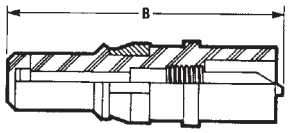

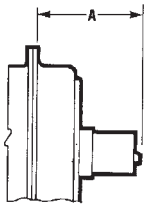

Receptacle

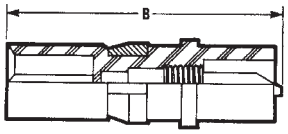

Right-Angle

Plug

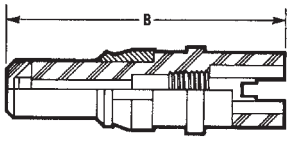

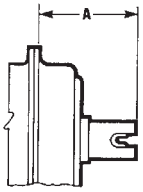

Receptacle

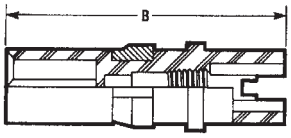

Ordering Information

Straight High-Voltage Contacts - #20 AWG Wire

	30µin. Gold	50µin. Gold	A in	A mm	B in	B mm	Wire Size
Plug	DM51157-0	DM51157-8	.539	13.69	.734	18.64	#20
Recept.	DM51155-0	DM51155-7	.539	13.69	.734	18.64	#20

Right-Angle High-Voltage Contacts - #20 AWG Wire

	30µin. Gold	50µin. Gold	A in	A mm	B in	B mm	Wire Size
Plug	DM51157-5000	DM51157-5005	.491	12.47	.697	17.70	#20
Recept.	DM51155-5000	DM51155-5004	.491	12.47	.697	17.70	#20

- High-Power Contacts will accommodate up to 40 Amps current rating.

Materials

- Contact Plating:
  - 30µin. gold over nickel
  - 50µin. gold over copper
- Receptacle: Beryllium copper
- Plug: Brass

Plug

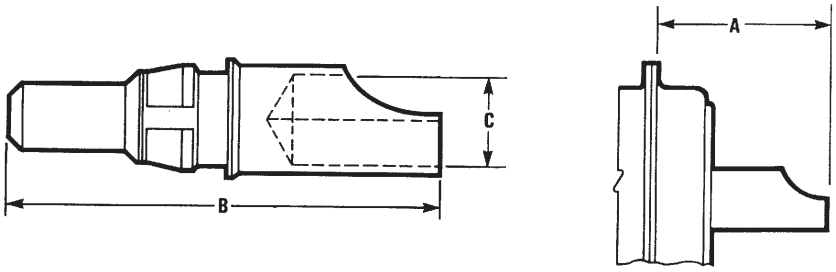

Receptacle

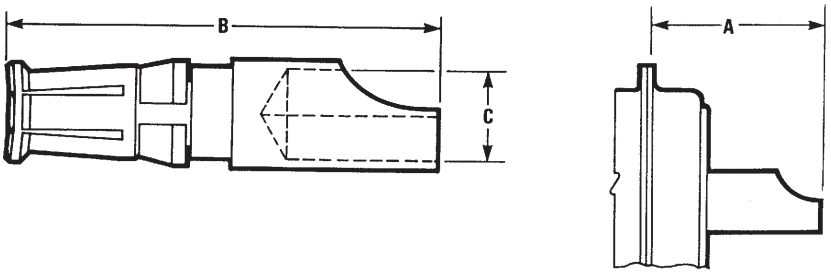

Ordering Information

Straight High-Power Contacts

	30µin. Gold	50µin. Gold	A in	A mm	B in	B mm	C in	C mm	Current Rating (Amps)	Wire Size (AWG)
Plug	DM53745-1	DM53745-28	.666	16.92	.866	22.00	.188	4.78	40	#8
Plug	DM53745-7	DM53745-27	.666	16.92	.866	22.00	.112	2.84	20	#12
Plug	DM53745-8	DM53745-25	.666	16.92	.866	22.00	.069	1.75	10	#16
Recept.	DM53744-1	DM53744-21	.666	16.92	.866	22.00	.188	4.78	40	#8
Recept.	DM53744-6	DM53744-25	.666	16.92	.866	22.00	.112	2.84	20	#12
Recept.	DM53744-7	DM53744-24	.666	16.92	.866	22.00	.069	1.75	10	#16

D-subminiature Metal Shell
Crimp and Poke
Series 3 - High Reliability

Cinch

Features

- ***High-reliability in a commercial grade connector.***
- ***Monoblock diallyl phthalate insulator for improved electrical performance.***
- ***Offered in 9, 15, 25, 37, and 50 position plugs and sockets.***
- ***Offered with .120 mounting holes, 4-40 clinch nuts, or dual float bushings.***
- ***Commercial version of M24308 Military connectors with tin-plated or zinc-plated shell and 30µin. gold contact plating.***
- ***Screw Machine Crimp and Poke contacts available as follows:***
  - ***Note that all contacts are packed loose.***
  - ***Plating options: 30µin. gold.***
  - ***Can be included with the connector or purchased separately (FO part numbers).***
- ***See pages 4-5 thru 4-10 for standard dimensions, contact arrangements, and panel mounting specifications.***

Materials

Insulator Material: Glass fiber-filled diallyl phthalate (green), UL 94V-0

Connector Shell: Steel with zinc plating and yellow chromate finish

Contact Material: Plug - Brass (machined), Socket - Phosphor bronze (machined)

Contact Plating: 30µin. gold over nickel

4-40 Clinch Nut: Steel with cadmium plating and yellow chromate finish

Dual Float Bushing: Stainless steel, passivated

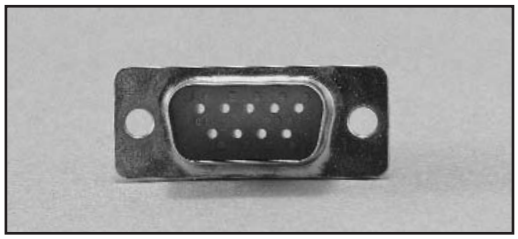

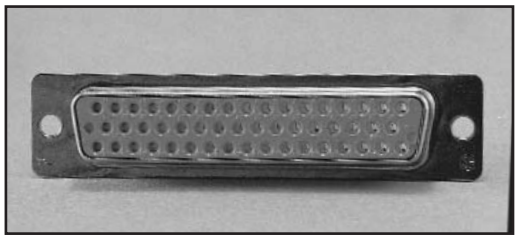

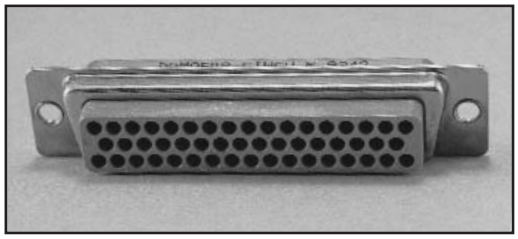

Environmental

Operating Temperature: -65°C to + 125°C

Shock: 50G peak per MIL-STD-202, Method 213, Condition G

Vibration: 12 cycles in three perpendicular directions @ 10-2000Hz, per MIL-STD-202, Method 204, Condition D

Moisture Resistance: 90-95% relative humidity @ 40°C for 96 hours per MIL-STD-202, Method 103

Electrical

Withstanding Voltage:	Minimum 1250V RMS @ sea level
Current Rating:	5 Amps
Contact Resistance:	2.7 milliohms maximum
Insulation Resistance:	5000 megohms maximum (initial); 1000 megohms (minimum) after environmental testing

Mechanical

Individual Contact Insertion and Separation Force (minimum/maximum): 0.7 oz./12 oz.

Durability: 500 mating cycles

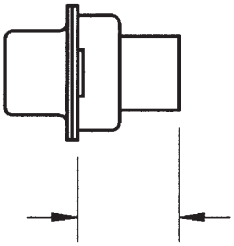

Termination Tooling

- Contact Insertion/Extraction Tool: #CIET-20-HD (Military #M81969/39-01). See page 4-103.
- Crimp Contact Hand Tool: Military #M22520/2-01. See page 4-103. Contact Positioner (below) required.
- Positioner for machine contacts for Hand Tool #M22520/2-01 (locates contact in the correct position): #M22520/2-08. See page 4-103.

Ordering Information

Crimp and Poke - Plugs

Zinc-Plated Shell with Yellow Chromate Finish

	Mounting Holes		4-40 Clinch Nuts		Dual Float Bushings	
Positions	30µin. Gold Contacts	Without Contacts	30µin. Gold Contacts	Without Contacts	30µin. Gold Contacts	Without Contacts
9	DEMA-9P	DEMA-9P-FO	DEMAE-9P	DEMAE-9P-FO	DEMAY-9P	DEMAY-9P-FO
15	DAMA-15P	DAMA-15P-FO	DAMAE-15P	DAMAE-15P-FO	DAMAY-15P	DAMAY-15P-FO
25	DBMA-25P	DBMA-25P-FO	DBMAE-25P	DBMAE-25P-FO	DBMAY-25P	DBMAY-25P-FO
37	DCMA-37P	DCMA-37P-FO	DCMAE-37P	DCMAE-37P-FO	DCMAY-37P	DCMAY-37P-FO
50	DDMA-50P	DDMA-50P-FO	DDMAE-50P	DDMAE-50P-FO	DDMAY-50P	DDMAY-50P-FO

Tin-Plated Shells with Grounding Indents

	Mounting Holes		4-40 Clinch Nuts		Dual Float Bushings	
Positions	30µin. Gold Contacts	Without Contacts	30µin. Gold Contacts	Without Contacts	30µin. Gold Contacts	Without Contacts
9	DEMA-9PTI	DEMA-9PTI-FO	DEMAE-9PTI	DEMAE-9PTI-FO	DEMAY-9PTI	DEMAY-9PTI-FO
15	DAMA-15PTI	DAMA-15PTI-FO	DAMAE-15PTI	DAMAE-15PTI-FO	DAMAY-15PTI	DAMAY-15PTI-FO
25	DBMA-25PTI	DBMA-25PTI-FO	DBMAE-25PTI	DBMAE-25PTI-FO	DBMAY-25PTI	DBMAY-25PTI-FO
37	DCMA-37PTI	DCMA-37PTI-FO	DCMAE-37PTI	DCMAE-37PTI-FO	DCMAY-37PTI	DCMAY-37PTI-FO
50	DDMA-50PTI	DDMA-50PTI-FO	DDMAE-50PTI	DDMAE-50PTI-FO	DDMAY-50PTI	DDMAY-50PTI-FO

Ordering Information

Crimp and Poke - Sockets

Zinc-Plated Shell with Yellow Chromate Finish

	Mounting Holes		4-40 Clinch Nuts		Dual Float Bushings	
Positions	30µin. Gold Contacts	Without Contacts	30µin. Gold Contacts	Without Contacts	30µin. Gold Contacts	Without Contacts
9	DEMA-9S	DEMA-9S-FO	DEMAE-9S	DEMAE-9S-FO	DEMAY-9S	DEMAY-9S-FO
15	DAMA-15S	DAMA-15S-FO	DAMAE-15S	DAMAE-15S-FO	DAMAY-15S	DAMAY-15S-FO
25	DBMA-25S	DBMA-25S-FO	DBMAE-25S	DBMAE-25S-FO	DBMAY-25S	DBMAY-25S-FO
37	DCMA-37S	DCMA-37S-FO	DCMAE-37S	DCMAE-37S-FO	DCMAY-37S	DCMAY-37S-FO
50	DDMA-50S	DDMA-50S-FO	DDMAE-50S	DDMAE-50S-FO	DDMAY-50S	DDMAY-50S-FO

Tin-Plated Shell

	Mounting Holes		4-40 Clinch Nuts		Dual Float Bushings	
Positions	30µin. Gold Contacts	Without Contacts	30µin. Gold Contacts	Without Contacts	30µin. Gold Contacts	Without Contacts
9	DEMA-9ST	DEMA-9ST-FO	DEMAE-9ST	DEMAE-9ST-FO	DEMAY-9ST	DEMAY-9ST-FO
15	DAMA-15ST	DAMA-15ST-FO	DAMAE-15ST	DAMAE-15ST-FO	DAMAY-15ST	DAMAY-15ST-FO
25	DBMA-25ST	DBMA-25ST-FO	DBMAE-25ST	DBMAE-25ST-FO	DBMAY-25ST	DBMAY-25ST-FO
37	DCMA-37ST	DCMA-37ST-FO	DCMAE-37ST	DCMAE-37ST-FO	DCMAY-37ST	DCMAY-37ST-FO
50	DDMA-50ST	DDMA-50ST-FO	DDMAE-50ST	DDMAE-50ST-FO	DDMAY-50ST	DDMAY-50ST-FO

Crimp and Poke Machined Contacts

- Will accommodate 20, 22, and 24 AWG wire.

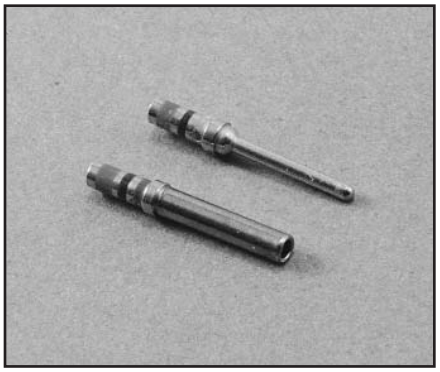

Ordering Information

Contacts

Description	
Pin	M39029/64-369
Socket	M39029/63-368

D-subminiature Metal Shell
MIL-C-24308
M24308 Series

Cinch

Features

- *Meets all MIL-C-24308 Class G specifications.*
- *Offered in Crimp and Poke and Solder Cup and PCB vertical and right-angle.*
- *Offered in 9, 15, 25, 37, and 50 position plugs and sockets except right-angle (9 to 37 positions).*
- *Monoblock green diallyl phthalate insulator for improved electrical performance.*
- *See pages 4-5 thru 4-10 for standard dimensions, contact arrangements, and panel mounting specifications.*

Materials

Insulator Material: Glass-filled diallyl phthalate (green) per MIL-M-14, Type SDG-F
Connector Shell: Steel with cadmium plating and yellow chromate finish
Contact Material: Plug - Brass (machined), Socket - Phosphor bronze (machined)
Contact Plating: 50µin. gold over copper or nickel
Dual Float Bushing: Stainless steel, passivated or non-magnetic brass

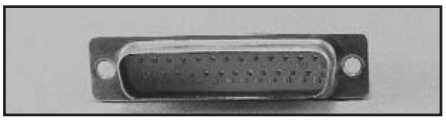

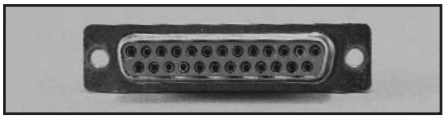
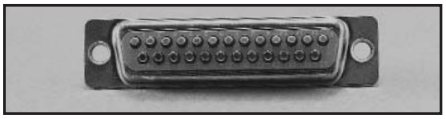

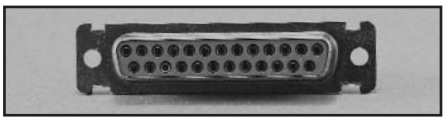

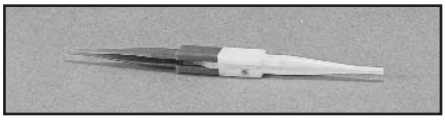

Environmental

Operating Temperature: -65°C to + 125°C
Shock: 50G peak per MIL-STD-202, Method 213, Condition G
Vibration: 12 cycles in three perpendicular directions @ 10-2000Hz, per MIL-STD-202 Method 204, Condition D
Moisture Resistance: 90-95% relative humidity @ 40°C for 96 hours per MIL-STD-202, Method 103

Electrical

Withstanding Voltage:	Minimum 1250V RMS @ sea level
Current Rating:	5 Amps
Contact Resistance:	2.7 milliohms maximum
Insulation Resistance:	5000 megohms maximum (initial); 1000 megohms (minimum) after environmental testing

Mechanical

Individual Contact Insertion and Separation Force (minimum/maximum): 0.7 oz./12 oz.
Durability: 500 mating cycles

D-subminiature Metal Shell
MIL-C-24308 Crimp and Poke
M24308 Series

- Available with .120 mounting holes, float bushings, or dual float bushings.
- Order with contacts included or separately.
- Order with contact Insertion/Extraction Tool included or order tool #CIET-20-HD separately. See page 4-103.

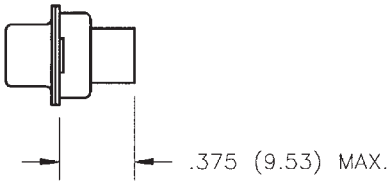

Ordering Information

Crimp and Poke Plugs

Steel Shell

Contacts Included. Insertion/Extraction Tool Not Included.

Positions	Mounting Holes	Float Bushings	Dual Float Bushings
9	M24308/4-1F	M24308/4-302F	M24308/4-435F
15	M24308/4-2F	M24308/4-303F	M24308/4-436F
25	M24308/4-3F	M24308/4-304F	M24308/4-437F
37	M24308/4-4F	M24308/4-305F	M24308/4-438F
50	M24308/4-5F	M24308/4-306F	M24308/4-439F

Contacts Included. Insertion/Extraction Tool Included.

Positions	Mounting Holes	Float Bushings	Dual Float Bushings
9	M24308/4-6F	M24308/4-313F	M24308/4-446F
15	M24308/4-7F	M24308/4-314F	M24308/4-447F
25	M24308/4-8F	M24308/4-315F	M24308/4-448F
37	M24308/4-9F	M24308/4-316F	M24308/4-449F
50	M24308/4-10F	M24308/4-317F	M24308/4-450F

Contacts Not Included. Insertion/Extraction Tool Not Included.

Positions	Mounting Holes	Float Bushings	Dual Float Bushings
9	M24308/4-259F	M24308/4-324F	M24308/4-457F
15	M24308/4-260F	M24308/4-325F	M24308/4-458F
25	M24308/4-261F	M24308/4-326F	M24308/4-459F
37	M24308/4-262F	M24308/4-327F	M24308/4-460F
50	M24308/4-263F	M24308/4-328F	M24308/4-461F

Call Toll Free: 1 (800) 323-9612

Ordering Information

Crimp and Poke Sockets

Steel Shell

Contacts Included. Insertion/Extraction Tool Not Included.

Positions	Mounting Holes	Float Bushings	Dual Float Bushings
9	M24308/2-1F	M24308/2-23F	M24308/2-342F
15	M24308/2-2F	M24308/2-24F	M24308/2-343F
25	M24308/2-3F	M24308/2-25F	M24308/2-344F
37	M24308/2-4F	M24308/2-26F	M24308/2-345F
50	M24308/2-5F	M24308/2-27F	M24308/2-346F

Contacts Included. Insertion/Extraction Tool Included.

Positions	Mounting Holes	Float Bushings	Dual Float Bushings
9	M24308/2-6F	M24308/2-34F	M24308/2-353F
15	M24308/2-7F	M24308/2-35F	M24308/2-354F
25	M24308/2-8F	M24308/2-36F	M24308/2-355F
37	M24308/2-9F	M24308/2-37F	M24308/2-356F
50	M24308/2-10F	M24308/2-38F	M24308/2-357F

Contacts Not Included. Insertion/Extraction Tool Not Included.

Positions	Mounting Holes	Float Bushings	Dual Float Bushings
9	M24308/2-281F	M24308/2-292F	M24308/2-482F
15	M24308/2-282F	M24308/2-293F	M24308/2-483F
25	M24308/2-283F	M24308/2-294F	M24308/2-484F
37	M24308/2-284F	M24308/2-295F	M24308/2-485F
50	M24308/2-285F	M24308/2-296F	M24308/2-486F

Ordering Information

Tooling

- Contact Insertion/Extraction Tool: #CIET-20-HD (Military #M81969/39-01). See page 4-103.
- Wire termination hand tool: #M22520/2-01. See page 4-103.
- Positioner for machine contacts for hand tool #M22520/2-08 (locates contact in the correct position). See page 4-103.

Crimp and Poke Contacts

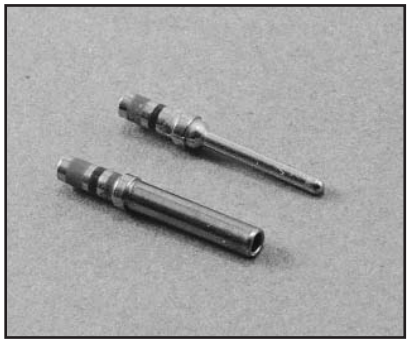

Ordering Information

- Will accommodate 20, 22, and 24 AWG wire.

Description	
Pin	M39029/64-369
Socket	M39029/63-368

- Available with .120" mounting holes, float bushings, or dual float bushings.
- Will accommodate up to 20 AWG wire.

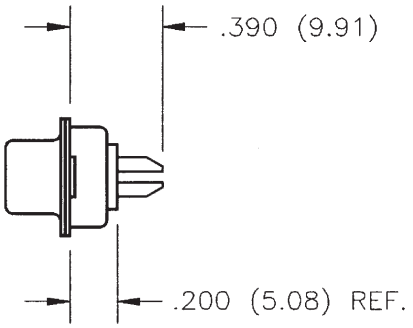

Ordering Information

Solder Cup Plugs

Steel Shell

Positions	Mounting Holes	Float Bushings	Dual Float Bushings
9	M24308/3-1F	M24308/3-12F	M24308/3-17F
15	M24308/3-2F	M24308/3-13F	M24308/3-18F
25	M24308/3-3F	M24308/3-14F	M24308/3-19F
37	M24308/3-4F	M24308/3-15F	M24308/3-20F
50	M24308/3-5F	M24308/3-16F	M24308/3-21F

Brass Non-Magnetic Shell

Positions	Mounting Holes	Float Bushings	Dual Float Bushings
9	M24308/7-1F	M24308/7-12F	M24308/7-17F
15	M24308/7-2F	M24308/7-13F	M24308/7-18F
25	M24308/7-3F	M24308/7-14F	M24308/7-19F
37	M24308/7-4F	M24308/7-15F	M24308/7-20F
50	M24308/7-5F	M24308/7-16F	M24308/7-21F

Solder Cup Sockets

Steel Shell

Positions	Mounting Holes	Float Bushings	Dual Float Bushings
9	M24308/1-1F	M24308/1-12F	M24308/1-23F
15	M24308/1-2F	M24308/1-13F	M24308/1-24F
25	M24308/1-3F	M24308/1-14F	M24308/1-25F
37	M24308/1-4F	M24308/1-15F	M24308/1-26F
50	M24308/1-5F	M24308/1-16F	M24308/1-27F

Brass Non-Magnetic Shell

Positions	Mounting Holes	Float Bushings	Dual Float Bushings
9	M24308/5-1F	M24308/5-12F	M24308/5-23F
15	M24308/5-2F	M24308/5-13F	M24308/5-24F
25	M24308/5-3F	M24308/5-14F	M24308/5-25F
37	M24308/5-4F	M24308/5-15F	M24308/5-26F
50	M24308/5-5F	M24308/5-16F	M24308/5-27F

Right-Angle Connector

- .283" footprint requires minimal PCB space.
- Available with three contact tail lengths (.127", .158", and .183") with .030" contact diameter.
- Available with two contact tail lengths (.127" and .183") with .040" contact diameter.
- Offered with .120" mounting holes.
- Mounting bracket: Black nylon. Can be removed if necessary.

Right-Angle

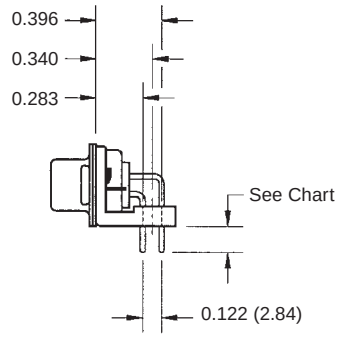

Ordering Information

Right-Angle PCB Plugs (Sockets not available)

Steel Shell

Positions	.127 Tail Length .030 Contact Diameter	.158 Tail Length .030 Contact Diameter	.183 Tail Length .030 Contact Diameter	.127 Tail Length .040 Contact Diameter	.183 Tail Length .040 Contact Diameter
9	M24308/24-25F	M24308/24-31F	M24308/24-49F	M24308/24-37F	M24308/24-55F
15	M24308/24-26F	M24308/24-32F	M24308/24-50F	M24308/24-38F	M24308/24-56F
25	M24308/24-27F	M24308/24-33F	M24308/24-51F	M24308/24-39F	M24308/24-57F
37	M24308/24-28F	M24308/24-34F	M24308/24-52F	M24308/24-40F	M24308/24-58F

Vertical Connector

- Available with two contact tail lengths (.158" and .183") and two contact diameters (.030" and .040").
- Offered with .120" mounting holes.

Vertical

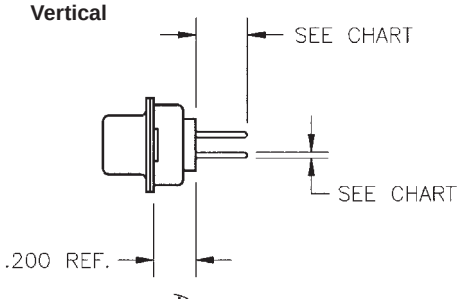

Ordering Information

Vertical PCB Plugs

Steel Shell

Positions	.158 Tail Length .030 Contact Diameter	.183 Tail Length .030 Contact Diameter	.158 Tail Length .040 Contact Diameter	.183 Tail Length .040 Contact Diameter
9	M24308/24-1F	M24308/24-7F	M24308/24-13F	M24308/24-19F
15	M24308/24-2F	M24308/24-8F	M24308/24-14F	M24308/24-20F
25	M24308/24-3F	M24308/24-9F	M24308/24-15F	M24308/24-21F
37	M24308/24-4F	M24308/24-10F	M24308/24-16F	M24308/24-22F
50	M24308/24-5F	M24308/24-11F	M24308/24-17F	M24308/24-23F

Vertical PCB Sockets

Steel Shell

Positions	.158 Tail Length .030 Contact Diameter	.183 Tail Length .030 Contact Diameter	.158 Tail Length .040 Contact Diameter	.183 Tail Length .040 Contact Diameter
9	M24308/23-1F	M24308/23-7F	M24308/23-13F	M24308/23-19F
15	M24308/23-2F	M24308/23-8F	M24308/23-14F	M24308/23-20F
25	M24308/23-3F	M24308/23-9F	M24308/23-15F	M24308/23-21F
37	M24308/23-4F	M24308/23-10F	M24308/23-16F	M24308/23-22F
50	M24308/23-5F	M24308/23-11F	M24308/23-17F	M24308/23-23F

FEATURES

Cinch backshells are offered in a variety of styles, each having a specific strength.

- **Backshells** have two-piece construction and are frequently used where appearance is a major factor. RFI/EMI shielding capability is also an option:
  - Plastic Backshells: No shielding.
  - Metallized Plastic: Economical method of shielding.
  - Diecast Backshells: Maximum shielding.

- Cinch **SDH Series** backshells utilize Cinch's Latch-N-Lock™ system with quick release disconnect. Just squeeze the latch levers to release the connector. Also available with standard 4-40 mounting hardware.

- **Junction Shells** come in a variety of sizes and shapes including right-angle and low profile. They are generally of one-piece construction with an adjustable clamp, but there is no shielding.

- **Hoods** have an improved appearance versus junction shells but no shielding. They are all-plastic and come in right-angle or straight configurations.

- **Hardware,** in the form of adjustable grommets or strain relief clamps and 4-40 screws, is generally supplied with the product; however, a variety of optional hardware is also available in the accessories section of this catalog.

The following is a summary of the various backshells, junction shells, and hoods that Cinch offers:

Backshells

Type	2-Piece	2-Piece	2-Piece	2-Piece	Super-D Connection System	
Material	Plastic	Metallized	Diecast	Diecast	Black Plastic	Gray Plastic
Series	DPH	DCH	DMH	Ethernet	SDH - B	SDH - G
Shell Sizes*	E A B C	E A B C D	E A B C D	A	E A B C	E A B C
Cable Exit	180°	180°	180°	90°/180°	90°/180°	90°/180°
Fits Connector Series marked with "•":						
D*A Series	•	•	•	•	•	
HTD Series	•	•	•			
D*U Series	•	•	•	•	•	
Series 3	•	•	•	•	•	
T Series Metal Shell	•	•	•	•	•	
T Series All-Plastic						•
Basic D	•	•	•	•	•	
Series 1	•	•	•	•	•	

Junction Shells/Hoods

	Junction Shells					Hoods		
Type	Straight Clamp	Round Clamp	Rt. Angle Clamp	Deep Straight Clamp	Switching Shell	Phenolic	Straight	Rt. Angle
Material	Metal	Metal	Metal	Metal	Metal	Plastic	Plastic	Plastic
Shell Sizes*	A B C D	A B C D	E A B C D	E A B C D	A B C D	A B	E A B	A B
Cable Exit	180°	180°	90°	180°	180°	180°	180°	90°
Fits Connector Series marked with "•":								
D*A Series	•	•	•	•	•	•	•	•
D*U Series	•	•	•	•	•	•	•	•
Series 3	•	•	•	•	•	•	•	•
T Series Metal Shell	•	•	•	•	•	•	•	•
T Series All-Plastic								
Basic D Series	•	•	•	•	•	•	•	•
Series 1	•	•	•	•	•	•	•	•

*Conversion Chart between Standard Density Connectors and HPD/HTD Series 1.5 Density Connectors

Shell Size	Standard D-sub	1.5 D-Sub HTD
E	9	15
A	15	26
B	25	44
C	37	62
D	50	N/A

D-subminiature Backshells - Two-Piece D*H Series

Cinch

- Standard two-piece construction available in plastic, metallized plastic, or diecast zinc versions with 180° straight cable entry.
- Fits standard metal shell D-subminiature plugs and sockets as well as HTD Series 1.5 D-subs.
- Ethernet hoods are available in diecast 15 position versions only with both 90° and 180° cable entry.
- Included in all backshells:
  - Hardware: 4-40 screws, hex nuts, 4-40 screw mounting bracket.
  - Grommets: To accommodate most cable sizes. Grommets also function as strain reliefs.
- Backshells are individually bagged.
- Note that slide locks may not be used with these backshells.
- Optional thumbscrew for backshell must be ordered separately if required.

Materials

- 4-40 screws, hex nuts, mounting bracket: Steel with zinc plating and clear chromate coating.
- Standard Backshells:
  - Plastic Backshells: ABS (black), hardware - steel with zinc plating, grommets - polyphenylene, (black).
  - Metallized Plastic Backshells: ABS with nickel over copper plating, hardware - steel with zinc plating, grommets - PVC (black).
  - Diecast Backshells: Diecast zinc, grommets - PVC (black).
- Ethernet Backshells: Diecast zinc, grommets - PVC (black).

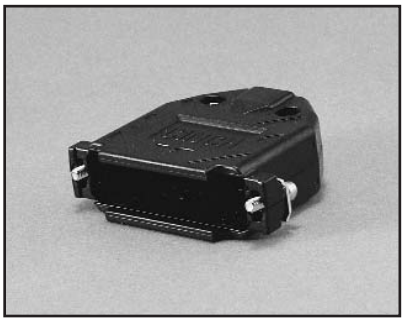

Plastic

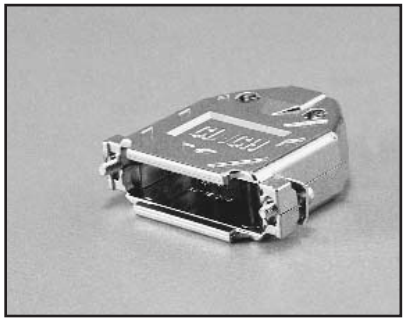

Metallized

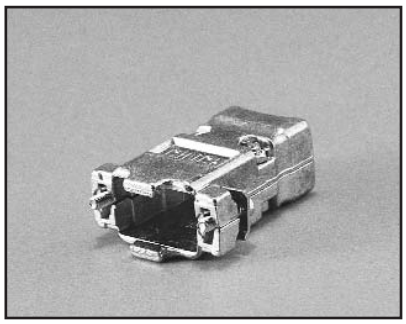

Diecast

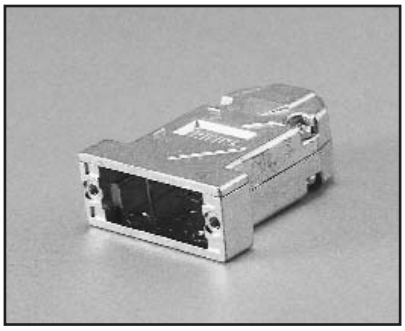

Ethernet Straight

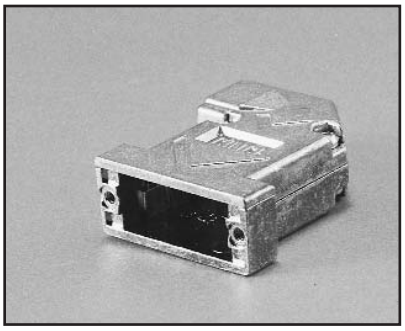

Ethernet Right-Angle

Straight (180°) Standard Backshells

Plastic and Metallized Plastic Backshells

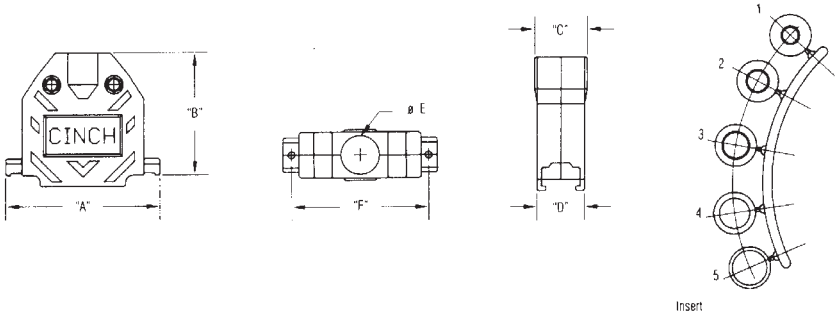

Dimensions

Shell	A		B		C		D		E		F	
Size	in	mm	in	mm	in	mm	in	mm	in	mm	in	mm
E	1.225	31.12	1.547	39.29	0.640	16.26	0.645	16.38	0.400	10.16	0.984	24.99
A	1.540	39.12	1.516	38.51	0.640	16.26	0.645	16.38	0.400	10.16	1.312	33.32
B	2.090	53.09	1.655	42.04	0.710	18.03	0.645	16.38	0.522	13.26	1.857	47.17
C	2.730	69.34	1.830	46.48	0.906	23.01	0.645	16.38	0.725	18.42	2.500	63.50
D	2.645	67.18	1.855	41.12	0.940	23.88	0.750	19.05	0.725	18.42	2.406	61.11

EMI/RFI Shielded Diecast Backshells

9 and 15 Position

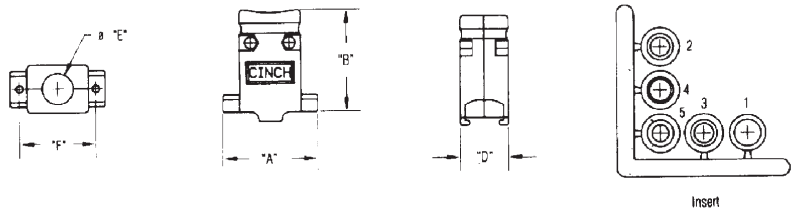

25 Position

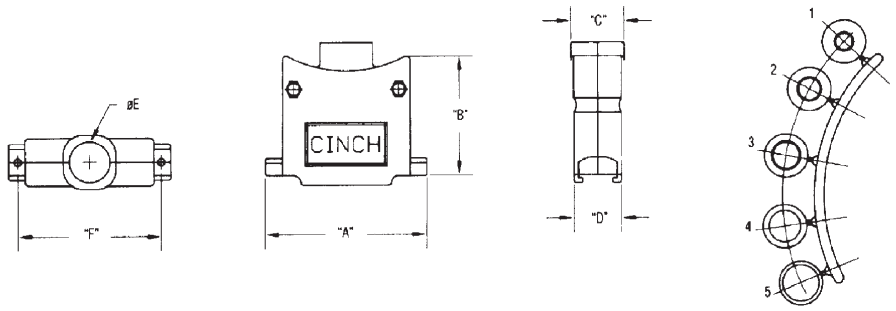

37 and 50 Position

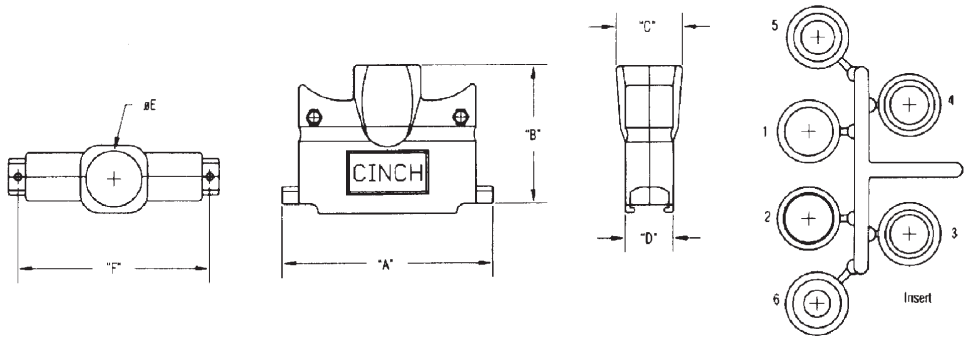

Dimensions

Shell	A		B		C		D		E		F	
Size	in	mm	in	mm	in	mm	in	mm	in	mm	in	mm
E	1.225	31.12	1.465	37.21	0.620	15.75	0.620	15.75	0.400	10.16	0.984	24.99
A	1.540	39.12	1.600	40.64	0.620	15.75	0.620	15.75	0.400	10.16	1.312	33.32
B	2.090	53.09	1.570	39.88	0.690	17.53	0.620	15.75	0.525	13.34	1.857	47.17
C	2.730	69.34	1.810	45.97	0.862	21.89	0.620	15.75	0.725	18.42	2.500	63.50
D	2.624	66.65	1.800	45.72	0.862	21.89	0.730	18.54	0.725	18.42	2.406	61.11

Ordering Information

D*H Two-Piece Backshells

Shell Size	Fits Standard Density	Fits HTD 1.5 Density	Cable Entry Style	Plastic	Cable Dia. (in)	Metallized Plastic	Cable Dia. (in)	Diecast Metal	Cable Dia. (in)
E	9	15	Straight (180°)	DPH-E-001	.210-.320	DCH-E-001	.210-.350	DMH-E-001	.210-.320
A	15	26	Straight (180°)	DPH-A-001	.210-.320	DCH-A-001	.210-.350	DMH-A-001	.210-.320
B	25	44	Straight (180°)	DPH-B-001	.230-.450	DCH-B-001	.230-.450	DMH-B-001	.230-.450
C	37	62	Straight (180°)	DPH-C-001	.350-.650	DCH-C-001	.350-.640	DMH-C-001	.350-.650
D	50	N/A	Straight (180°)	DPH-D-001	.350-.650	DCH-D-001	.350-.640	DMH-D-001	.350-.640

Straight (180°) Diecast Ethernet Backshells

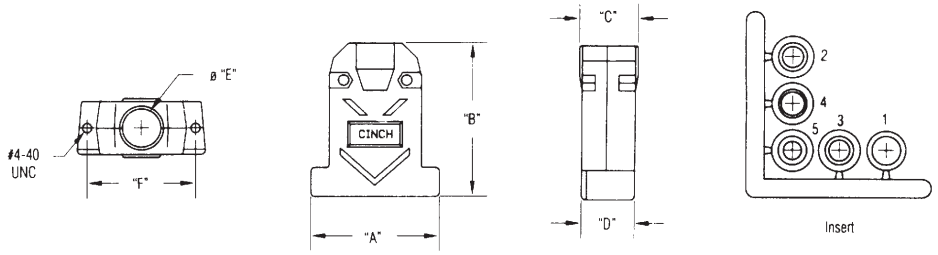

Type 2

Right-Angle (90°) Diecast Ethernet Backshells

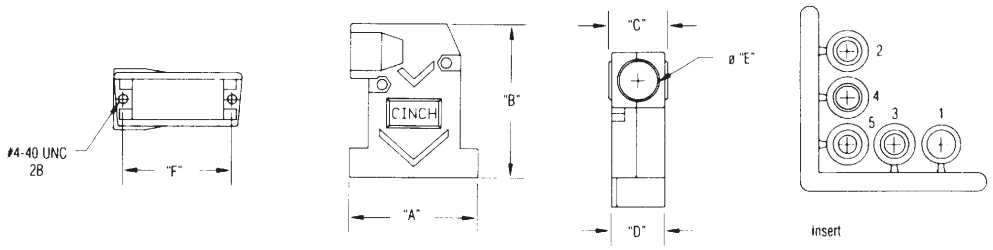

Ordering Information

D*H Ethernet Diecast Backshells

Fits Shell Size	Fits Standard Density	Cable Diameter (in)	Cable Entry Style		A in	A mm	B in	B mm	C in	C mm	D in	D mm	E in	E mm	F in	F mm
A	15	.210-.320	Straight (180°)	DMH-A-001XL	1.550	39.37	1.880	47.75	0.710	18.03	0.64	16.26	0.522	13.26	1.312	33.32
A	15	.210-.320	Rt. Angle (90°)	DMH-A-901X	1.550	39.37	1.880	47.75	0.710	18.03	0.64	16.26	0.522	13.26	1.312	33.32

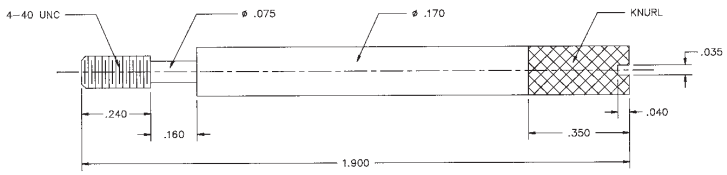

THUMBSCREWS (OPTIONAL) FOR D*H BACKSHELLS
Order #4-40-THMB-1 (two each required per backshell).
(Will not work with ethernet type backshells)

D-subminiature Backshells - Super D
SDH Series

Cinch

Features

- *The Cinch Super D Interconnection System is a simple, fast, economical, and reliable way for mating connectors from cable to cable or cable to panel.*
- *Snap-on Super D plastic hoods captivate connectors providing positive, self-latching, audible mating with reliable retention and Latch-N-Lock quick release disconnect.*
- *Snap-on Super-D plastic hoods are also available with filler ends to utilize 4-40 mounting hardware.*
- *Super D hoods are available:*
  - *Straight (180°) or Right-Angle (90°) cable entry.*
  - *Sizes: 9, 15, 25, and 37.*
  - *Sizes 15, 25, and 37 are available in standard or large cable openings.*
- *Black SDH backshells accommodate any standard metal shell IDC, solder cup, or crimp and poke D-subminiature connector.*
- *Gray SDH backshells accommodate the Cinch All-Plastic IDC T-Series connector on pages 4-38 thru 4-39.*
- *Each Super-D plastic hood includes a stay band to strain relief the cable wire. Stay band tool SD-MSBT is required. Extra stay bands are available on page 4-90.*

Materials

Hood: Modified phenylene oxide - black for metal shell connectors or gray for all-plastic IDC connectors
Latch Block: Diecast zinc
Screws for Latching Blocks: Steel with nickel plating
Stay Band: Steel with zinc plating and clear chromate finish

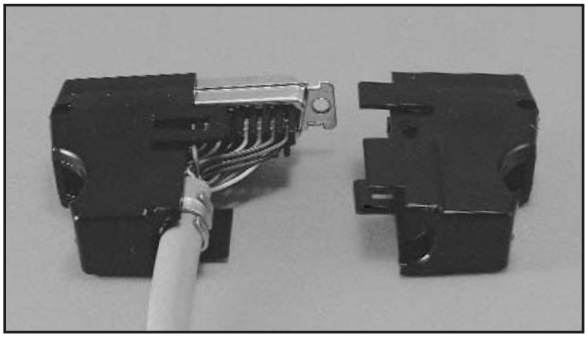

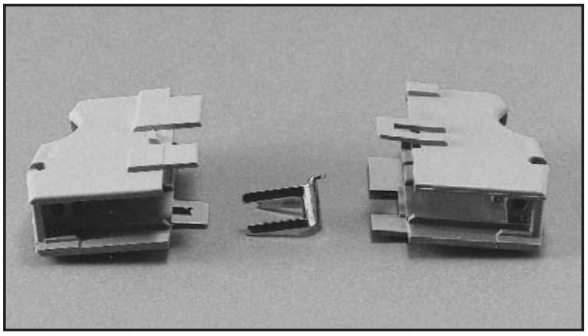

Straight (180°) Cable Entry Black Backshells for Metal Shell Connectors

Adapter Hood with Filler Ends

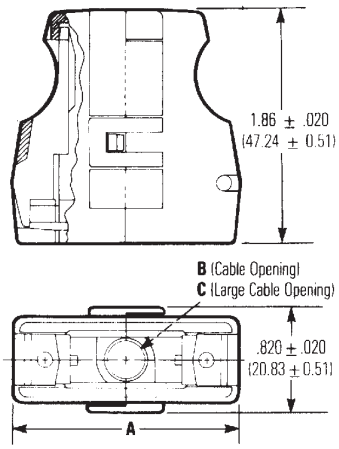

Adapter Hood with Latches

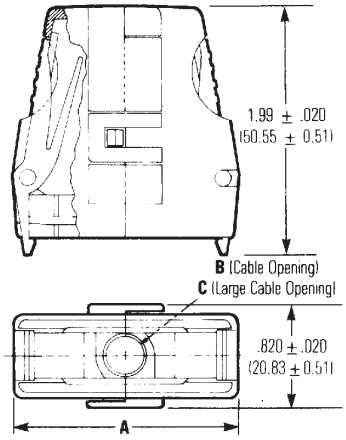

Right-Angle (90°) Cable Entry Black Backshells for Metal Shell Connectors

Right-Angle Adapter Hood

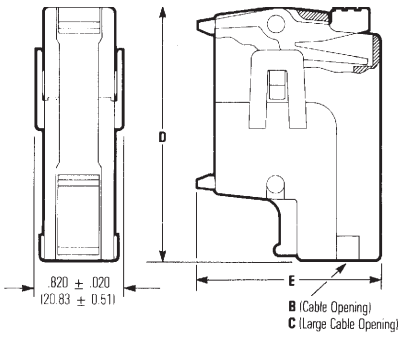

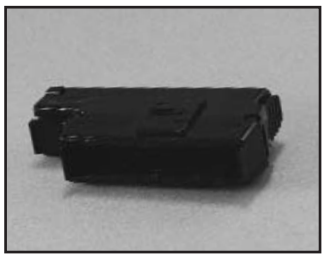

Dimensions

	A ± .020" (.58mm)		B ±.020" (.58mm)		C ±.020" (.58mm)		D ±.020" (.58mm)		E±.020" (.58mm)	
Positions	in	mm	in	mm	in	mm	in	mm	in	mm
9	1.47	37.34	.31	7.87	-	-	1.94	49.21	1.25	31.75
15	1.80	45.72	.31	7.87	.41	10.41	2.25	57.15	1.34	34.13
25	2.35	59.69	.33	8.40	.47	11.94	2.94	74.61	1.50	38.10
37	2.99	75.95	.37	9.40	.50	12.70	3.59	91.28	1.53	38.89

Ordering Information

Straight (180°) Cable Entry Black Backshells for Metal Shell Connectors

	Latches		Filler Ends		Filler Ends w/4-40 Screws	
Positions	Standard Cable Opening	Large Cable Opening	Standard Cable Opening	Large Cable Opening	Standard Cable Opening	Large Cable Opening
9	SDH-9BL	N/A	SDH-9BF	N/A	SDH-9BFCS	N/A
15	SDH-15BL	SDH-15BLL	SDH-15BF	SDH-15BFL	SDH-15BFCS	SDH-15BFLCS
25	SDH-25BL	SDH-25BLL	SDH-25BF	SDH-25BFL	SDH-25BFCS	SDH-25BFLCS
37	SDH-37BL	SDH-37BLL	SDH-37BF	SDH-37BFL	SDH-37BFCS	SDH-37BFLCS

Right-Angle (90°) Cable Entry Black Backshells for Metal Shell Connectors

Ordering Information

	Latches	
Positions	Standard Cable Opening	Large Cable Opening
9	SDH-9RBL	N/A
15	SDH-15RBL	SDH-15RBLL
25	SDH-25RBL	SDH-25RBLL
37	SDH-37RBL	SDH-37RBLL

Latching Blocks for Super D Adapter System

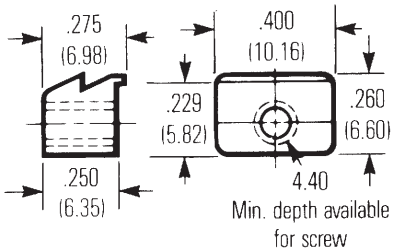

Ordering Information

Description	For Panel Thickness	Qty per pack	Qty Required Per SDH Hood	Catalog Number
Latching Block	N/A	1 each	2 each	SD-LB
Latching Block with SEM Screws	Up to .060"	2 each	2 each	SD-LB-060
Removable Mounting Screws for Adapter Hood	N/A	1 each	2 each	4-40UNC2AX3/4
Latching Block with SEM Screws	.060" to .080"	2 each	2 each	SD-LB-060-080
Latching Block with SEM Screws	.080" to .125"	2 each	2 each	SD-LB-125

- Fits only T Series All-Plastic IDC connector on pages 4-38 thru 4-39.

Straight (180°) Cable Entry Gray Backshells for All-Plastic Connectors

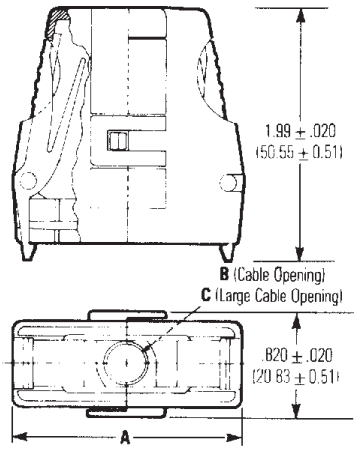

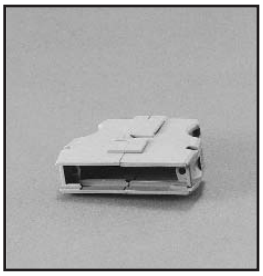

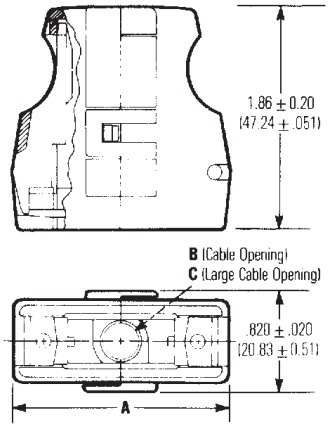

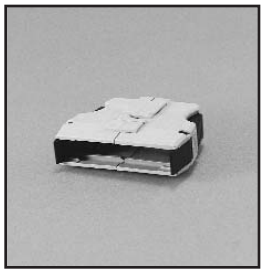

Dimensions

	A ±.020" (.58mm)		B ±.020" (.58mm)		C ±.020" (.58mm)	
Positions	in	mm	in	mm	in	mm
9	1.47	37.34	.31	7.87	---	---
15	1.80	45.72	.31	7.87	.41	10.41
25	2.35	59.69	.33	8.40	.47	11.94
37	2.99	75.95	.37	9.40	.50	12.70

Ordering Information

Straight (180°) Cable Entry Gray Backshells for All-Plastic Connectors

	Latches		Filler Ends		Filler Ends w/4-40 Screws	
Positions	Standard Cable Opening	Large Cable Opening	Standard Cable Opening	Large Cable Opening	Standard Cable Opening	Large Cable Opening
9	SDH-9GL	N/A	SDH-9GF	N/A	SDH-9GFCS	N/A
15	SDH-15GL	SDH-15GLL	SDH-15GF	SDH-15GFL	SDH-15GFCS	SDH-15GFLCS
25	SDH-25GL	SDH-25GLL	SDH-25GF	SDH-25GFL	SDH-25GFCS	SDH-25GFLCS
37	SDH-37GL	SDH-37GLL	SDH-37GF	SDH-37GFL	SDH-37GFCS	SDH-37GFLCS

Right-Angle (90°) Cable Entry Gray Backshells for All-Plastic Connectors

- Fits only IDC connectors on pages 4-38 thru 4-39.

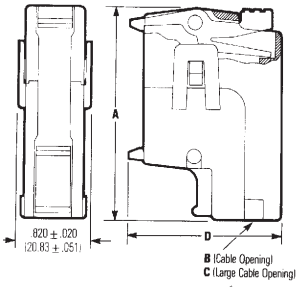

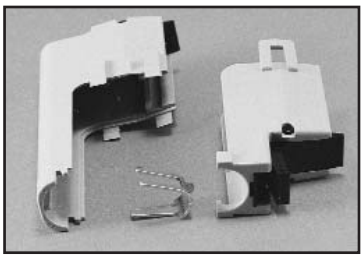

Dimensions

Positions	A ±.020" (.58mm) in	A ±.020" (.58mm) mm	B ±.020" (.58mm) in	B ±.020" (.58mm) mm	C ±.020" (.58mm) in	C ±.020" (.58mm) mm	D ±.020" (.58mm) in	D ±.020" (.58mm) mm
9	1.94	49.21	.31	7.87	--	---	1.25	31.75
15	2.25	57.15	.31	7.87	.41	10.41	1.34	34.13
25	2.94	74.61	.33	8.40	.47	11.94	1.50	38.10
37	3.59	91.28	.37	9.40	.50	12.70	1.53	38.89

4

Ordering Information

Right-Angle (90°) Cable Entry Gray Backshells for All-Plastic Connectors

Positions	Latches Standard Cable Opening	Latches Large Cable Opening
9	SDH-9RGL	N/A
15	SDH-15RGL	SDH-15RGLL
25	SDH-25RGL	SDH-25RGLL
37	SDH-37RGL	SDH-37RGLL

Ordering Information

Accessories for Gray Backshells

Positions	Optional Strain Reliefs*	Additional Stay Bands**
9	SD-WC9	SD-9-15-SB
15	SD-WC15	SD-9-15-SB
25	SD-WC25	SD-25-37-SB
37	SD-WC37	SD-25-37-SB

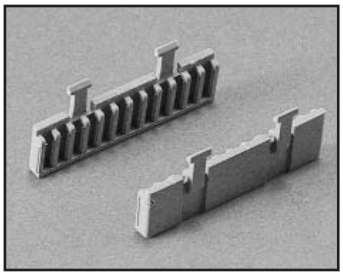

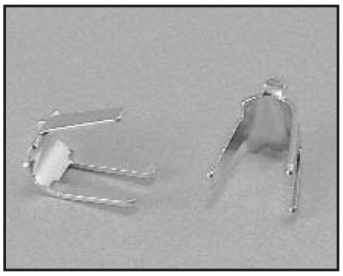

* Two each required per backshell.
** Stay band tool #SD-MSBT required. See page 4-100..

Screw for screwlocking connector assembly - (2 each required): 4-40UNC2AX3/4.

See page 4-85 for latch block drawing.

Cinch

MATERIALS

- ***Shell Material: Zinc-plated low carbon steel with yellow chromate finish.***
- ***Clamp: Zinc-plated steel with yellow chromate finish.***
- ***Screw: Zinc-plated steel with yellow chromate finish.***
- ***Stop Nut: Zinc-plated brass with yellow chromate finish.***

Straight Clamp

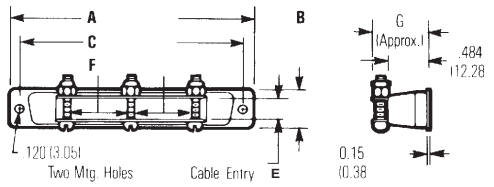

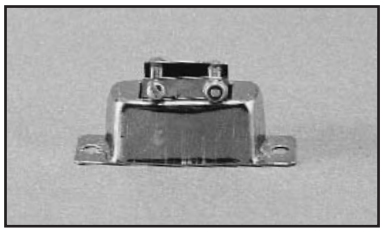

Shell Size	Positions	A in	A mm	B in	B mm	C in	C mm	E in	E mm	F in	F mm	G in	G mm
A	15	1.531	38.89	.500	12.70	1.312	33.32	.296	7.52	.312	7.92	.640	16.26
B	25	2.078	52.78	.500	12.70	1.852	47.04	.296	7.52	.796	20.22	.640	16.26
C	37	2.718	69.04	.500	12.70	2.500	63.50	.296	7.52	.687	17.45	.640	16.26
D	50	2.625	66.68	.609	15.47	2.406	61.11	.390	9.91	.687	17.45	.703	17.86

Round Clamp

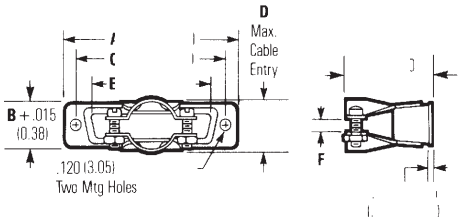

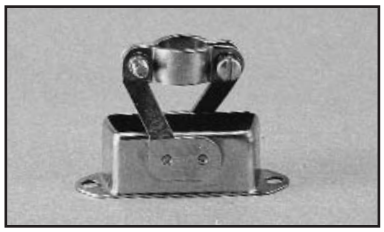

Shell Size	Positions	A in	A mm	B in	B mm	C in	C mm	D in	D mm	E in	E mm	F in	F mm	G in	G mm
A	15	1.531	38.89	.500	12.70	1.312	33.32	.406	10.31	.984	23.72	.125	3.18	1.031	26.19
B	25	2.078	52.78	.500	12.70	1.852	47.04	.593	15.06	1.515	38.48	.187	4.75	1.062	26.97

Right-Angle Clamp

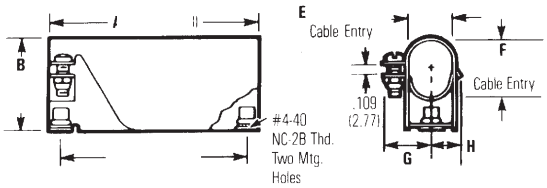

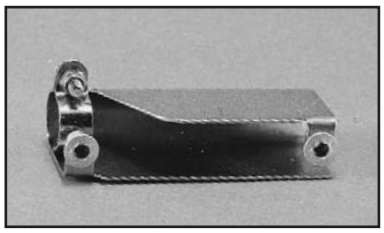

Shell Size	Positions	A in	A mm	B in	B mm	C in	C mm	E in	E mm	F in	F mm	G in	G mm	H in	H mm
E	9	1.203	30.56	0.718	18.24	.984	24.99	.437	11.10	.437	11.10	.468	11.89	.281	7.14
A	15	1.531	38.89	0.718	18.24	1.312	33.32	.437	11.10	.437	11.10	.468	11.89	.281	7.14
B	25	2.078	52.78	0.968	24.59	1.852	47.04	.437	11.10	.625	15.88	.468	11.89	.281	7.14
C	37	2.718	69.04	1.187	30.15	2.500	63.50	.437	11.10	.812	20.62	.468	11.89	.281	7.14
D	50	2.625	66.68	1.250	31.75	2.406	61.11	.562	14.27	.906	23.01	.531	13.49	.343	8.71

Deep Straight Clamp

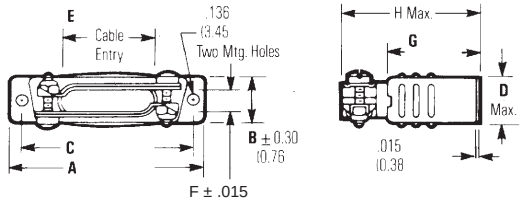

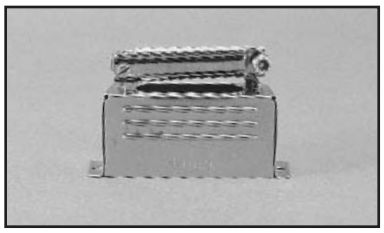

Shell		A		B		C		D		E		F		G		H	
Size	Positions	in	mm	in	mm	in	mm	in	mm	in	mm	in	mm	in	mm	in	mm
E	9	1.203	30.56	.484	12.29	0.984	24.99	.578	14.68	.375	9.53	.375	9.53	.750	19.05	1.219	30.96
A	15	1.531	38.89	.484	12.29	1.312	33.32	.578	14.68	.713	18.11	.312	7.92	.750	19.05	1.250	31.75
B	25	2.078	52.78	.484	12.29	1.852	47.04	.578	14.68	1.000	25.40	.312	7.92	1.000	25.40	1.531	38.89
C	37	2.718	69.04	.484	12.29	2.500	63.50	.578	14.68	1.375	34.93	.312	7.92	1.000	25.40	1.531	38.89
D	50	2.625	66.68	.593	15.06	2.406	61.11	.687	17.45	1.406	35.71	.406	10.31	1.125	28.58	1.656	42.06

Switching Shell

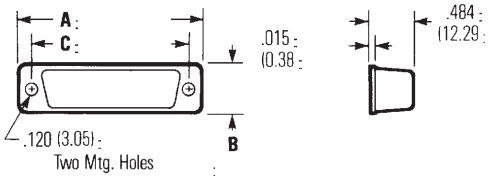

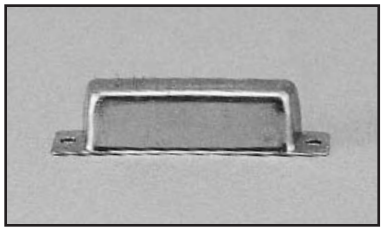

Shell		A		B		C	
Size	Positions	in	mm	in	mm	in	mm
A	15	1.531	38.89	.500	12.70	1.312	33.32
B	25	2.078	52.78	.500	12.70	1.852	47.04
C	37	2.718	69.04	.500	12.70	2.500	63.50
D	50	2.625	66.68	.609	15.47	2.406	61.11

Ordering Information

Junction Shells - Metal

Shell Size	Fits Standard Density	Straight Clamp	Round Clamp	Right-Angle Clamp	Deep Straight Clamp	Switching Shell
E	9	N/A	N/A	DE-19977-5	DE-24657	N/A
A	15	DA-19678-1	DA-20961	DA-19977-1	DA-24658	DA-19678-6
B	25	DB-19678-2	DB-20962	DB-19977-2	DB-24659	DB-19678-7
C	37	DC-19678-3	N/A	DC-19977-3	DC-24660	DC-19678-8
D	50	DD-19678-4	N/A	DD-19977-4	DD-24661	DD-19678-9

Phenolic Hood

Shell Material: Phenolic (black).
#4-40 Screws: Steel with nickel plating.

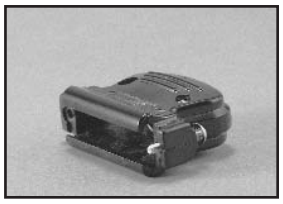

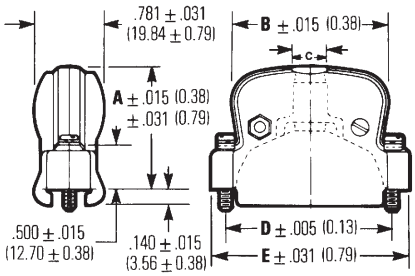

Shell Size	Positions	A in	A mm	B in	B mm	C in	C mm	D in	D mm	E in	E mm
A	15	1.297	32.94	1.219	30.96	.266	6.76	1.312	33.32	1.641	41.68
B	25	1.406	35.71	1.797	45.64	.328	8.33	1.852	47.04	2.203	55.96

All-Plastic Straight (180°) Hood

Shell Material: Nylon (gray).
#4-40 Screws: Steel with nickel plating.

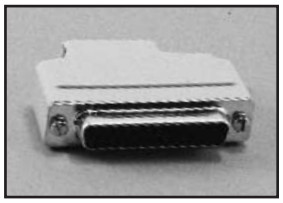

Connector Not Included

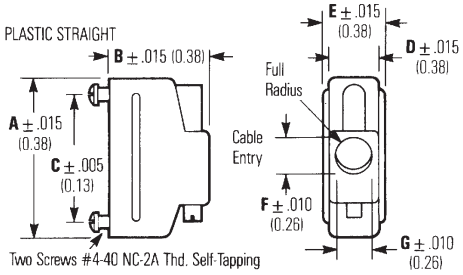

Shell Size	Positions	A in	A mm	B in	B mm	C in	C mm	D in	D mm	E in	E mm	F in	F mm	G in	G mm
E	9	1.218	30.94	1.000	25.40	.984	23.72	.500	12.70	.562	14.27	.281	7.14	.218	7.14
A	15	1.546	38.27	1.000	25.40	1.312	33.32	.500	12.70	.562	14.27	.360	9.14	.360	9.14
B	25	2.093	53.16	1.250	31.75	1.852	47.04	.500	12.70	.562	14.27	.493	12.52	.360	9.14

All-Plastic Right-Angle (90°) Hood

Shell Material: Nylon (gray).
#4-40 Screws: Steel with nickel plating.

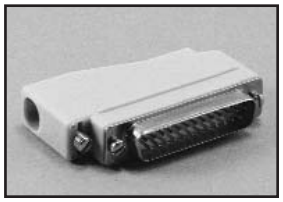

Connector Not Included

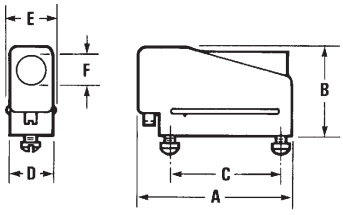

Shell Size	Positions	A in	A mm	B in	B mm	C in	C mm	D in	D mm	E in	E mm	F in	F mm
A	15	1.822	46.28	1.000	25.40	1.312	33.32	.500	12.70	.562	14.28	.360	9.14
B	25	2.368	60.15	1.250	31.75	1.852	47.04	.500	12.70	.562	14.28	.360	9.14

Ordering Information

Plastic Hoods

Shell Size	Standard Density	Phenolic Hood	Straight Hood	Right Angle
E	9	N/A	DE-51218-1	N/A
A	15	DA-51225-1	DA-51210-1	DA-51211-1
B	25	DB-51226-1A	DB-51212-1	DB-51213-1
C	37	N/A	N/A	N/A
D	50	N/A	N/A	N/A

Dust Caps

- For use with all Cinch D-subminiature connectors.
- Used to protect connector contacts when connector is not mated.
- Made of polyethylene (black).

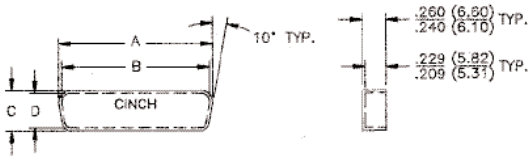

Ordering Information

Fits Shell Size	Fits Standard Density	Catalog No.	Description	A in	A mm	B in	B mm	C in	C mm	D in	D mm
E	9	DE-59-20	Socket	.694	17.63	.627	15.93	.362	9.19	.295	7.49
E	9	DE-60-20	Plug	.749	19.02	.682	17.32	.412	10.46	.345	8.76
A	15	DA-59-20	Socket	1.022	25.95	.955	24.25	.362	9.19	.295	7.49
A	15	DA-60-20	Plug	1.077	27.36	1.010	25.65	.412	10.46	.345	8.76
B	25	DB-59-20	Socket	1.562	39.67	1.495	37.97	.362	9.19	.295	7.49
B	25	DB-60-20	Plug	1.635	41.52	1.568	39.83	.430	10.92	.363	9.22
C	37	DC-59-20	Socket	2.210	56.13	2.143	54.43	.362	9.19	.295	7.49
C	37	DC-60-20	Plug	2.283	57.99	2.216	56.29	.430	10.92	.363	9.22
D	50	DD-59-20	Socket	2.116	53.75	2.049	52.04	.474	12.04	.407	10.34
D	50	DD-60-20	Plug	2.179	55.35	2.112	53.64	.536	13.61	.469	11.91

Guide Pin Plates

- Aligns connectors before actual mating. Generally used in blind mate applications.
- Male or female guide plates will accommodate Cinch male or female connectors.
- Plate: Cold-rolled steel with cadmium plating and yellow chromate finish.
- Guide pin (male): Stainless steel, passivated.
- Screws, rivets (male plate), washers (male plate): Steel with cadmium plating and yellow chromate finish.

Plug

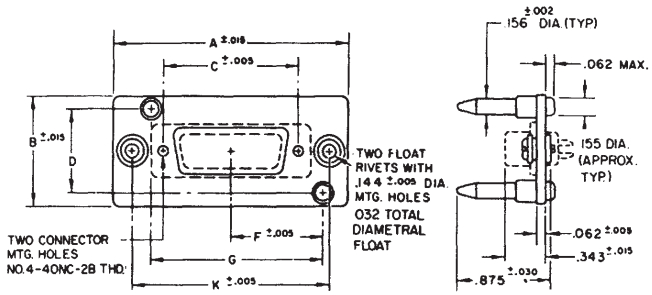

Socket

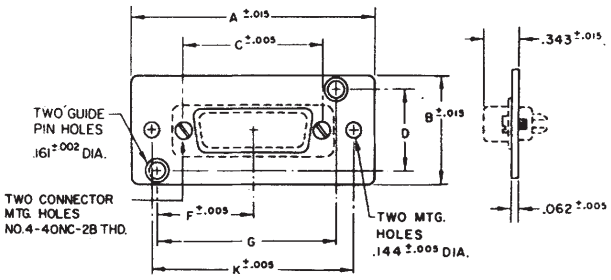

Ordering Information

Fits Shell Size	Fits Standard Density	Plug	Socket	A in	A mm	B in	B mm	C in	C mm	D in	D mm	F in	F mm	G in	G mm	K in	K mm
E	9	N/A	N/A														
A	15	DA-22213	DA-22214	2.281	57.93	1.000	25.40	1.312	33.32	.750	19.05	.898	22.81	1.663	42.24	1.906	48.41
B	25	DB-22255	DB-22254	2.820	71.63	1.000	25.40	1.852	47.04	.750	19.05	1.168	29.67	2.203	55.96	2.446	62.13
C	37	DC-22070	DC-22071	3.468	88.09	1.000	25.40	2.500	63.50	.750	19.05	1.492	37.90	2.851	72.42	3.094	78.59
D	50	DD-21962	DD-21961	3.375	85.73	1.125	28.58	2.406	61.112	.874	21.88	1.437	36.50	2.749	69.82	3.000	76.20

Slide Lock Assemblies

- A slide lock assembly is a metal bracket offered with hardware necessary to mount into the standard connector mounting holes. It consists of the lock retainer plate, two screws, two washers, and two nuts. Two lock posts are required to fit into the mounting holes of the mating connector. These must be ordered separately.
- Compatible with all Cinch Backshells, Hoods, and Junction Shells *except* D*H Series, SDH Series, and phenolic hood.
- Compatible with all Cinch metal shell D-subminiature connectors.

Materials

- Slide Lock Plate: Stainless steel, passivated.
- Slide lock hex nut, washer #4-40 screw: Steel with zinc plating and yellow chromate finish.
- Lockpost, washer, lockwasher, and hex nut: Steel with zinc plating and yellow chromate finish.

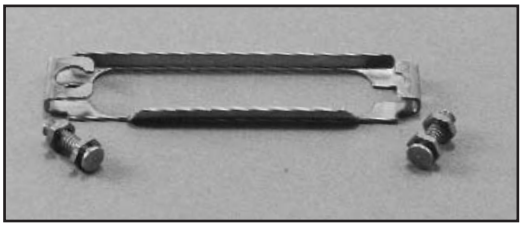

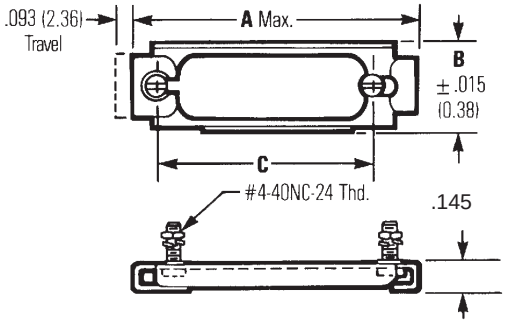

Consists of Lock Retainer and two lock posts (order separately).
NOTE: Not compatible with D*H Series or SDH Series backshells.

Ordering Information

Shell Size	Fits Standard Density	Lock Retainer	A in	A mm	B in	B mm	C in	C mm
E	9	DE-51224-1	1.442	36.63	.500	12.70	0.984	24.99
A	15	DA-51220-1	1.770	44.96	.500	12.70	1.312	33.27
B	25	DB-51221-1	2.293	58.24	.500	12.70	1.852	47.04
C	37	DC-51222-1	2.958	75.13	.500	12.70	2.500	63.50
D	50	DD-51223-1	2.847	72.31	.609	15.47	2.406	62.48

Lock Post: #D53018. Two (2) required with each Slide Lock Assembly.

Screwlocks

- Screwlocks are designed to retain the same size mated connectors together or to secure the connector to a rack/panel. Screwlocks may be used on plugs or sockets.
- Female screwlocks consist of one #4-40 screw with a #4-40 hole in the top, two flat washers to accommodate different panel thicknesses, one lockwasher, and one #4-40 nut. Military female screwlocks include three flat washers.
- Male screwlocks consist of one #4-40 slotted screw and a spring tension clip. Different sizes accommodate the various connector flange sizes and types of backshells or hoods (if applicable).
- Two screwlocks are required per connector.
- Military screwlocks meet all requirements of MIL-C-24308.

Materials

Commercial Screwlock Assemblies:
- Male Screwlock Assembly: Clip and screw are steel with zinc plating and yellow chromate finish.
- Female Screwlock Assembly: Washers (2), lockwashers, hex nuts, and nuts are steel with zinc plating and yellow chromate finish.

M24308 Military Screwlock Assemblies:
- Male Screwlock Assembly: Clip and screw are steel with cadmium plating and yellow chromate finish.
- Female Screwlock Assembly: Washers (3), lockwashers, hex nuts, and nuts are steel with cadmium plating and yellow chromate finish.

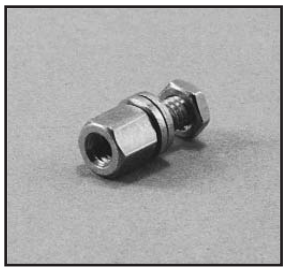
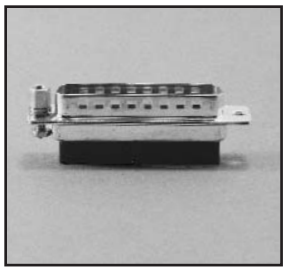

Female Screwlock

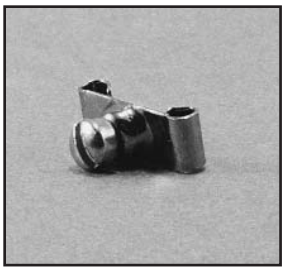
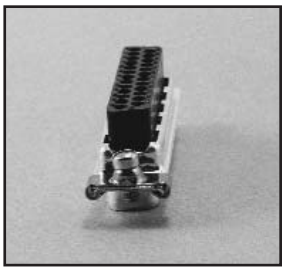

Male Screwlock

- Screwlock assemblies will not fit D*H or SDH Series backshells.

Male Screwlocks

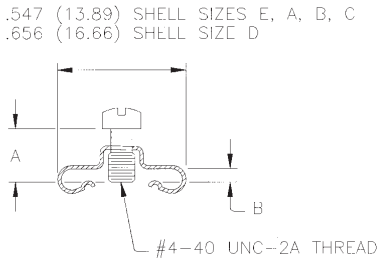

Ordering Information

Shell Size					E	A	B	C	D
Positions					9	15	25	37	50
	A		B						
	in	mm	in	mm					
Commercial:									
D20419-0	0.250	56.35	0.033	0.84	P/S	P/S	S	S	
D20419-16	0.250	56.35	0.048	1.22	S*	S*	P/S*	P/S*	
D20419-21	0.281	63.34	0.059	1.50		P*	P*		
D20420-0	0.250	56.35	0.033	0.84					S
D20420-12	0.281	63.34	0.048	1.22					P/S*
D20420-15	0.281	63.34	0.059	1.50					P*
Military MIL-C-24308:									
M24308/25-9F	Per MIL spec				P/S	P/S	P/S	P/S	
M24308/25-10F	Per MIL spec								P/S

NOTE: P = Plug, S= Socket
* Indicates use with junction shell

Female Screwlocks

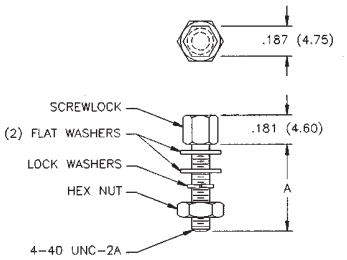

Ordering Information

Shell Size			E	A	B	C	D
Positions			9	15	25	37	50
	A						
	in	mm					
Commercial:							
D20418-2	0.312	70.32	P/S	P/S	P/S	P/S	P/S
D20418-39	0.628	141.55	P/S	P/S	P/S	P/S	P/S
Military MIL-C-24308:							
M24308/26-1F	Per MIL spec		P/S	P/S	P/S	P/S	P/S
M24308/26-2F	Per MIL spec		P/S	P/S	P/S	P/S	P/S

NOTE: P = Plug, S= Socket

Auto-Clinch™ D Semi-Automatic Termination Tool

Auto Clinch D is a semi-automatic, pneumatically powered, and electrically controlled termination machine designed to terminate IDC D-subminiature connectors. It employs a selective programmer and a common nest for all four connector sizes and can be equipped to terminate metal shell connectors. It can also be optionally equipped with remote visual color code display for training sequences. It has a provision for omission of wires.

Auto-Clinch D Tool

Part No.: ACD-432

Certi-Clinch™ D Field Termination Tool
*For 24-26 AWG Wire

Certi-Clinch D is designed for mass termination of individual wires, eliminating wire stripping, soldering, and crimping. It handles all four connector sizes, is readily portable, and requires no set-up time and little operator time. Rugged, all-metal construction affords trouble-free long life.

For metal shell IDC D-subminiature connectors.
Part No. SD-CCWN

For all-plastic IDC D-subminiature connectors.
Part No. SD-CC

Conversion nest for converting all-plastic type to metal shell.
Part No. SD-CCN

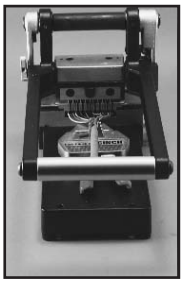

Certi-Clinch D Field Termination Tool

Uni-Clinch™ D Single-Wire Hand Insertion Tool

Designed to insert one 22-26 AWG wire at a time, Uni-Clinch D is used as a field repair tool by field service engineers.

Part No. SD-UC

Uni-Clinch Hand Insertion Tool

Super D™ Manual Stay Band Tool

Designed for applying the steel stay band/strain relief to the cable before termination of wires to the connector, the manual Stay Band Tool applies both stay band sizes to the full range of cable sizes.

Part No. SD-MSBT

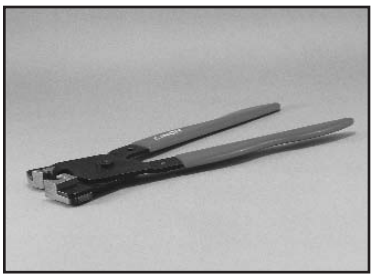

Manual Tool

NOTE: All termination tools on this page are used in conjunction with T* Series D-subminiature connectors.

Hand Crimping Tool for Stamped Contact 300 PC Reels

Two types of transport for connector chains are available with crimping ranges of 20 through 30 AWG for B crimpings

	Part Number
D*A Series 20 through 26 AWG Wire	GHC-B
D*A Series 28 through 30 AWG Wire	GHC-B1
HTD Series	HTD-266

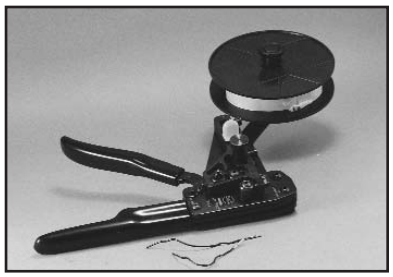

Contact Crimp Hand Tool
(300 Contact Reel)

Hand Crimping Tool for Loose Stamped Contacts

	Part Number
D*A Series	HTD-544
D*U Series	BT-20-HC
HTD Series	HTD-544

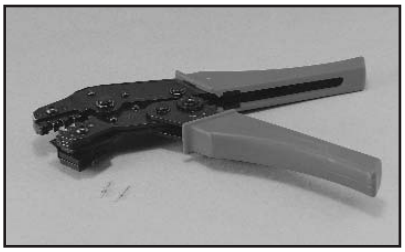

Contact Crimp Hand Tool
(HTD-544)

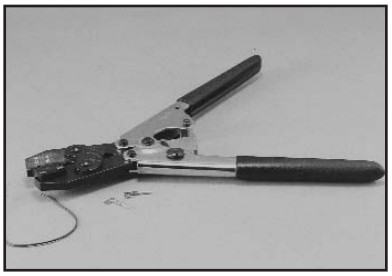

Contact Crimp Hand Tool
(BT-20-HC)

Contact Insertion/Extraction Tool for Stamped Contacts

	Part Number
D*A Series	CIET-20-HDB
D*U Series	CIET-20-HDB
HTD Series	CIET-22-DF

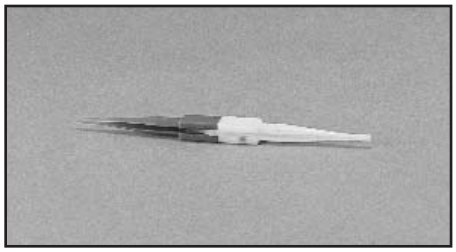

Contact Insertion/Extraction Hand Tool
For D*A and D*U Series for Stamped Contacts
(CIET-20-HDB)

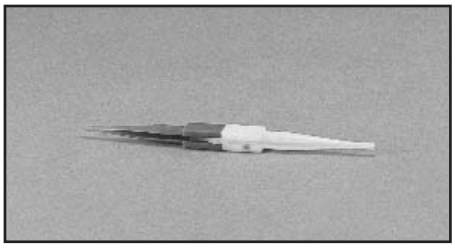

Contact Insertion/Extraction Hand Tool
For D1/2 Contacts
(CIET-22-DF)

Semi-Automatic Stripping and Crimping Tool

Advantages and Characteristics

- Stripping and crimping in one easy operation
- Easy to install and adjust
- Requires little maintenance
- Wearing parts replaced in a matter of minutes
- Long service life thanks to best-quality materials
- Different quick change applicators in the same stripper crimper
- Increased productivity

Our GSC-20-30 crimp machine in operation with stripper crimper and quick change tool

Ordering Information

Stripper Crimper

Description	Part Number	Comments	Catalog Number
D*A Series Stripper Crimper Only	599-11-11-578	Comes equipped with the applicator for 20-24 AWG contacts	GSC-20-30
D*A Series Applicator Only For 20-24 AWG	598-98-97-630	Applicator only For 20-24 AWG contacts	ASC-20-24
D*A Series Applicator Only For 26-30 AWG	598-98-97-632	Applicator only For 26-30 AWG contacts	ASC-26-30
HTD Series Stripper Crimper Only	599-11-11-518	Comes equipped with applicator for 22-28 AWG contacts	HTD-518
HTD Series Applicator Only 22-28 AWG	598-98-97-636	Applicator only For 22-28 AWG contacts	ASC-DH
D*U Series Stripper Crimper Only	599-11-11-258	Comes equipped with applicator for 20-28 AWG contacts	ESC-20-3
D*U Series Applicator Only 20-28	598-98-97-638	Applicator only For 20-28 AWG contacts	ASC-DU

Stripper Crimper Spare Parts

Part Number	Description	Catalog Number
598-98-97-631	D*A Punch & Anvil Kit 20-24 AWG	SCPA-631
598-98-97-633	D*A Punch & Anvil Kit 26-30 AWG	SCPA-633
598-98-97-637	HTD Series Punch & Anvil Kit	SCPA-637
598-98-97-639	D*U Series Punch & Anvil Kit	SCPA-639
598-98-97-640	Stripping Blades for 20-24 AWG Wire	SCSB-640
598-98-97-641	Stripping Blades for 26-30 AWG Wire	SCSB-641
598-98-97-642	D*A Series Contact shear blade	SCCS-642
598-98-97-643	Shear blade holder	SCSH-643
598-98-97-644	Sensor switch	SCSS-644
598-98-97-645	Strip blade holder	SCBH-645

M22520/2-01

Metal Shell High-Reliability Crimp and Poke Termination Tool

Hand crimping tool for high-reliability machined D*U, Series 3, and M24308 Crimp and Poke contacts.
M22520/2-01

NOTE: Positioner required with crimping tool

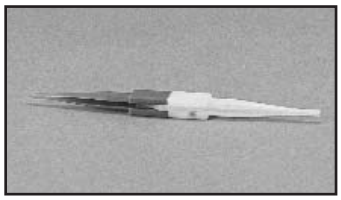

CIET-20-HD

Metal Shell Military Crimp and Poke Insertion/Extraction Tool

For inserting or extracting machined D*U, Series 3, or M24308 Crimp and Poke contacts.
Part No.: CIET-20-HD

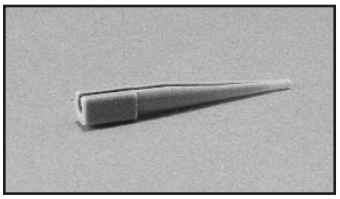

CET-20-11

Military Extraction Tip Only

For extracting high-reliability machined D*U, Series 3, or M24308 Crimp and Poke contacts.
Part No.: CET-20-11

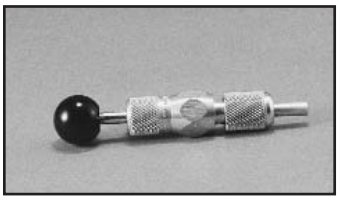

CET-C6B

Coaxial and High-Voltage Contact Extraction Tool

For extracting co-axial and high-voltage contacts from metal shell high-reliability connectors.

Part No.: CET-C6B

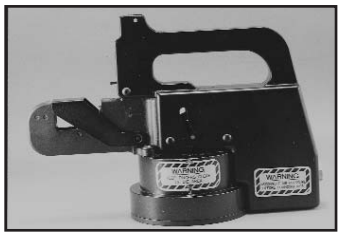

FCT-551

Pneumatic Bench Top Press for Crimping Ferrules

This lightweight, portable press is used to crimp the ferrules on the overmold shielding hardware kits. Crimp dies ordered separately.

Part No.: 599-11-11-551
Catalog No.: FCT-551

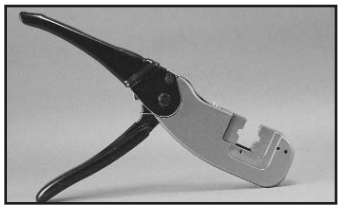

FCT-552

Hand Tool for Crimping Ferrules and Coax Contacts

Uses same crimp dies as pneumatic tool.

Part No.: 599-11-11-552
Catalog No.: FCT-552

Positioner--A device when attached to a crimping tool that locates the contact in the correct position.

Positioner for machined contacts
D*U Series Positioner
Part No.: 599-11-11-580
Catalog No.: EP-580
Series 3 and M24308 Connector Positioner
Part No.: 598-98-97-618
Catalog No.: M22520/2-08

Crimp Ferrule

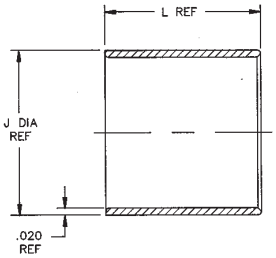

Catalog Number	Part Number	Type	Crimp Die Part No.	Crimp Die Catalog No.
CF-51	462-44-22-451	1	598-98-97-607	CD-07
CF-42	462-44-22-442	1	598-98-97-600	CD-00
CF-43	462-44-22-443	1	598-98-97-601	CD-01
CF-44	462-44-22-444	1	598-98-97-602	CD-02
CF-45	462-44-22-445	1	598-98-97-603	CD-03
CF-46	462-44-22-446	1	598-98-97-604	CD-04
CF-47	462-44-22-447	2	598-98-97-605	CD-05
CF-50	462-44-22-450	2	598-98-97-606	CD-06

DURA-CON

All-Plastic Strip Connectors
Metal Shell Mil-C-83513 Connectors
Terminal Blocks Microedge
.050" D-microminiature

Cinch

Cinch Dura-Con™ connectors are designed for applications that require a rugged, durable, and high-performance interconnect. Dura-Con is the ideal connector for applications where weight and space must be kept to a minimum while maintaining maximum reliability. Miniaturized airborne electronics and data processing equipment, where shorter signal paths are needed, represent typical applications for these unique connectors.

The heart of the Dura-Con system is the Dura-Con pin contact. The Cinch Dura-Con pin contact is made from a precision miniature spring cable with a welded tip. The expanded cable provides seven spring members peripherally around the pin so that contact is maintained with the mating socket wall no matter what radial forces are applied. This spring may be flexed many times without any evidence of metal fatigue. Reliable mating is further ensured by protecting the pin contact in a tightly toleranced recessed cavity.

Cinch's family of Dura-Con connectors includes MIL-C-83513 Series connectors along with our own commercial equivalents. The commercial Dura-Con product line offers an expanded range of termination and hardware options for all-plastic and metal shell wire versions and right-angle and straight PC board mount "terminal blocks". Cinch also packages the Dura-Con contact in a very low profile plastic strip connector on .050" centers and in a line of high-density microminiature edge (Microedge) board connectors that meet the requirements of MIL-C-55302. Cinch has created a line of plastic and metal shell Dura-Con connector savers for very high mating cycle applications such as test equipment.

Termination Options:

Cinch offers the following termination methods for its Dura-Con connectors:

Insulated Wire - Insulated wire is crimped to the Dura-Con contacts then epoxy backpotted at the factory. Wire is available in standard lengths of 18, 24, 36, and 48 inches.

Uninsulated Wire - 24 AWG, gold-plated, uninsulated wire is crimped to the Dura-Con contact at the factory. Wire is available in standard lengths of 0.5, 1.0, and 2.0 inches. This option allows the user greater flexibility when installing the connector.

Solder Cup - For applications that require the lowest contact resistance, Cinch offers Dura-Con connectors with solder cups for termination by the user.

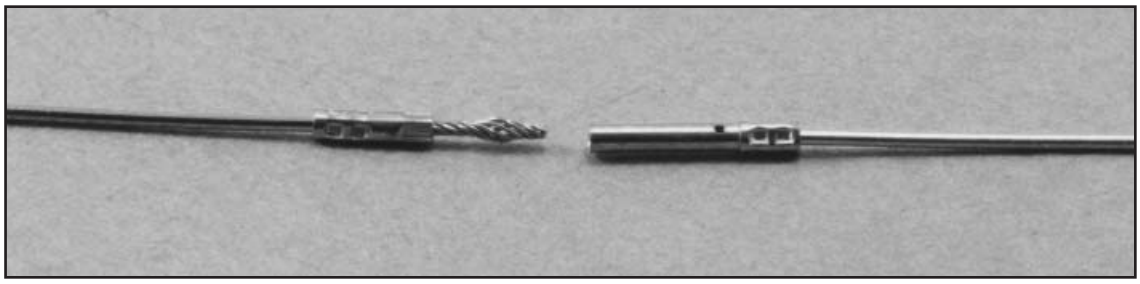

Dura-Con is a trademark of Cinch Connectors.

Custom Capabilities:

Standard Cinch Dura-Con connectors satisfy a wide variety of applications. Cinch's line of Dura-Con D-microminiature connectors is one of the most versatile in the industry. There are over 50,000 possible combinations of Cinch standard options such as connector type, size, materials, hardware, and termination.

When special application requirements arise, Cinch Dura-Con connectors take this versatility to the next level. Whether specific needs entail new variations of simple end-to-end connector assemblies or more complex and intricate harness assemblies, Cinch Connector Division has the state-of-the-art engineering resources and research facilities in place to meet your needs. Cinch approaches your business with a well-defined goal: to ensure the integrity of your design and to execute our contribution to it in a responsible, cost-effective manner. This philosophy has led Cinch to a position of industry leadership.

For complete information regarding the total capabilities of the Dura-Con connector series, or for custom application assistance, contact your nearest Cinch Connectors sales office.

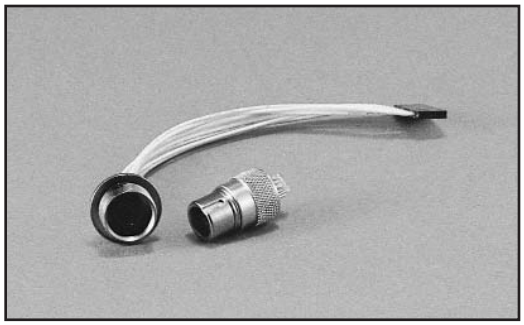

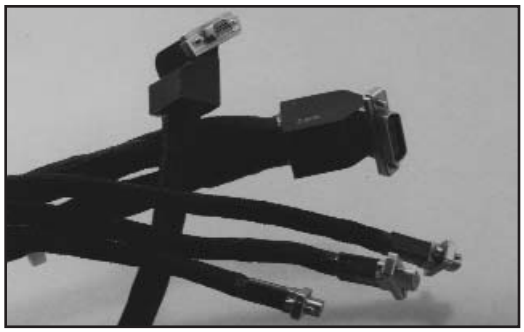

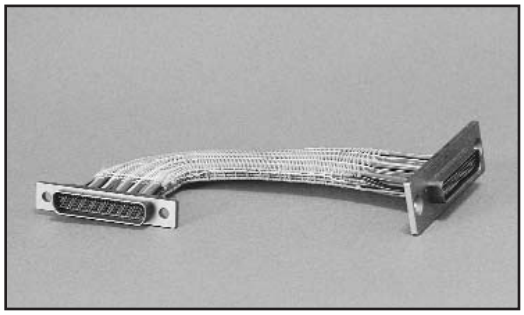

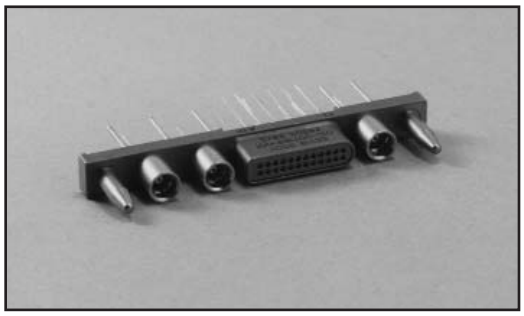

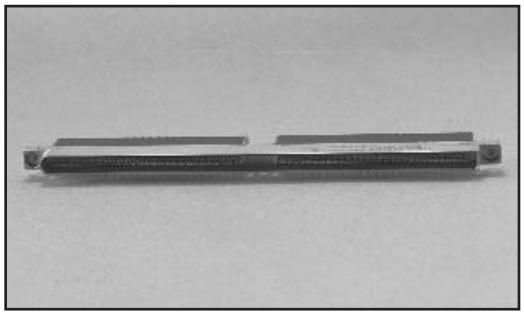

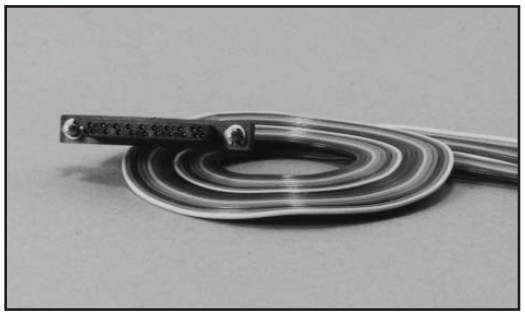

Dura-Con High Reliability All-Plastic

.050" (1.27mm) Density
Solder Cup/Wire
D-Microminiature

Cinch

Features

- ***Both plug and socket available in 9, 15, 21, 25, 31, 37, and 51 positions.***
- ***Termination styles - solder cup, gold-plated solid wire, and insulated stranded wire.***
- ***Several styles of mounting hardware are available for cable-to-cable, cable-to-board mount, and cable-to-panel mount applications.***
- ***High-performance Dura-Con twist-pin contact.***
- ***Economical all-plastic shell for lightweight applications where no shielding is required.***
- ***Meets requirements of MIL-C-83513 except where noted.***

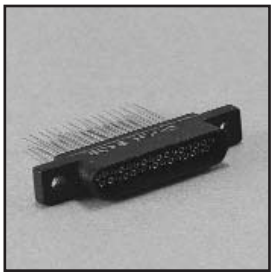

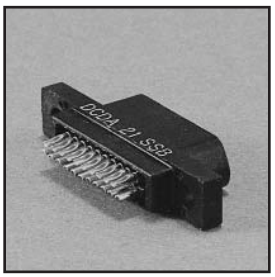

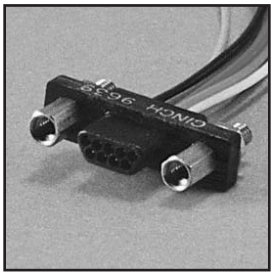

Materials

Insulator: UL94V-0 rated glass-filled polyester

Contacts: Pins - Copper alloy, Sockets - Copper alloy (machined)

Contact Plating: .000050 in gold

Environmental

Operating Temperature: -55° C to +135° C

Electrical

Current Rating: 3 Amps maximum

Withstanding Voltage: 600 VAC RMS @ sea level

Contact Resistance: 8 milliohms maximum change

Mechanical

Individual Contact: 6 oz. (170.40 g) maximum insertion;
0.5 oz. (14.20 g) minimum withdrawal

Mating / Unmating Force: See table

No. of Contacts	Maximum Mating Force Lb.	Maximum Mating Force Kg	Minimum Unmating Force Lb.	Minimum Unmating Force Kg
9	5.63	2.56	.28	.13
15	9.38	4.26	.47	.21
21	13.13	5.96	.66	.30
25	15.63	7.10	.78	.35
31	19.38	8.80	.97	.44
37	23.13	10.50	1.16	.53
51	31.88	14.47	1.59	.72

Contact Arrangements

(Face view of pin insulator)
(Use reverse order for socket)

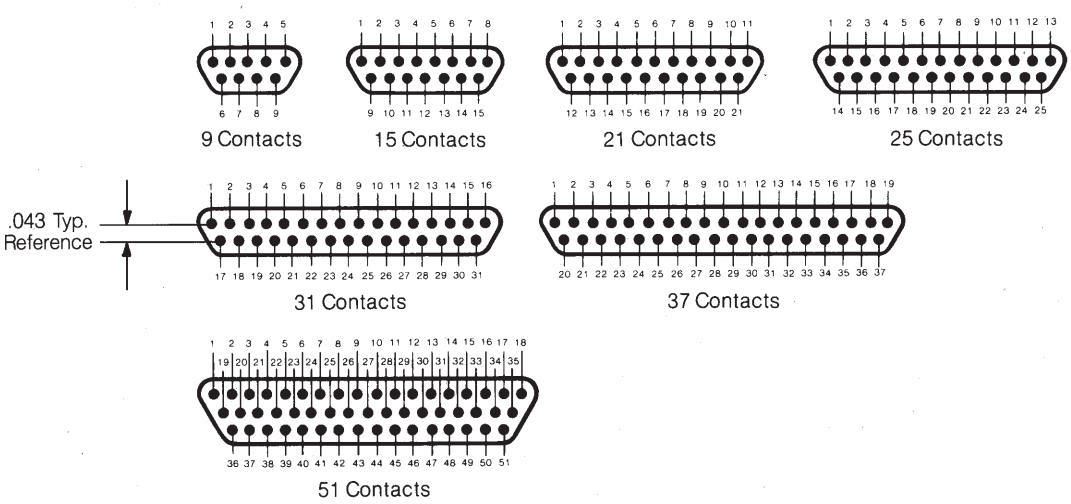

Ordering Information

DC D A 37 P 6 E 2-18.0 K

Cinch Dura-Con D Connector

Insulator Type
***D** = Thermoplastic
Glass Reinforced

Mounting Type
***A** = Screw Mount Flange

No. of Contacts
9, 15, 21, 25, 31, 37, 51

Contact Type
P – Pin (Plug)
S – Socket (Receptacle)

Wire Size in AWG
5 = 25 AWG Solid Copper
6 = 26 AWG Stranded
S = Solder Cup (Skip to Mounting Hardware)

Wire Type
E = MIL-W-16878/4, 7 Strand
C = Solid Copper - Uninsulated

(Consult factory for non-standard wire types)

Mounting Hardware**
B = No Hardware
F = Float Mount
R = Reverse Float Mount
K = Jackscrew (Standard)
L = Jackscrew (Low Profile)
P = Jackpost, MIL-C-83513/5-07

Lead Length in inches***
00.5 Solid copper wire only
01.0 Solid copper wire only
02.0 Solid copper wire only
18.0 Stranded wire only
24.0 Stranded wire only
36.0 Stranded wire only
48.0 Stranded wire only

Insulation
Color or Wire Finish
1 = White
***2** = Yellow (Stranded Wire)
3 = Tin-Plated
***4** = Gold-Plated (Solid Wire Only)
***5** = Color Coded Per MIL-Std. (681)
System 1. (Stranded Wire Only)

***** - Indicates Cinch std. option.
******- See p. 5-12 for std. hardware dims. See p. 5-13 for non-std. hardware & p. 5-31 for Mil spec. hardware both sold separately.
*******- Length Tolerance: solid wire = ± 3/32", standard wire = ± 1/4".

Connector Dimensions - Plastic Shell

Plug

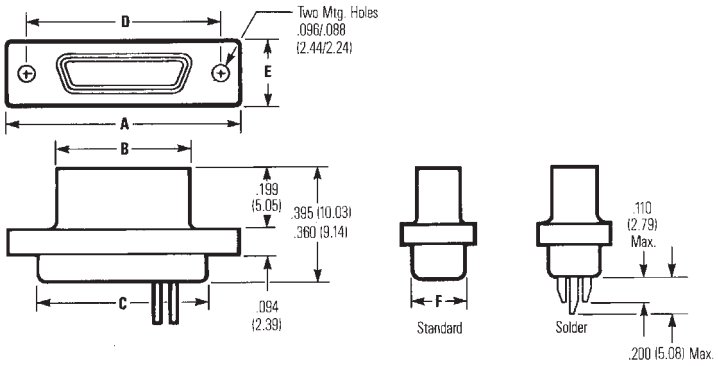

Socket

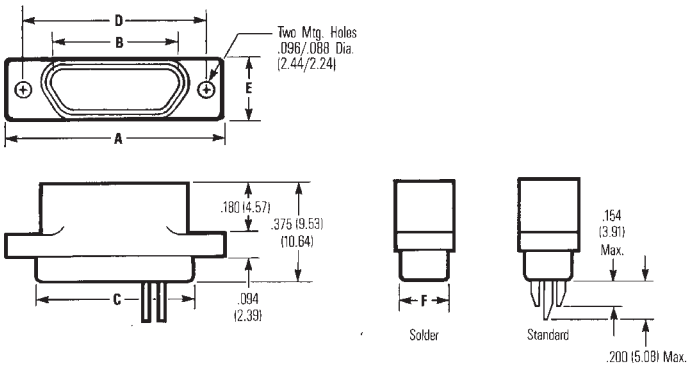

5

No. of Contacts	A ± .010 (.254) in	A mm	B Max. in	B Max. mm	C +.010 (.254) -.018 (.457) in	C mm	D ±.005 (.127) in	D mm	E ±.010 (.254) in	E mm	F Max. in	F Max. mm
9 Plug	.778	19.76	.292	7.42	.398	10.11	.565	14.35	.208	5.28	.173	4.39
9 Socket	.778	19.76	.376	9.55	.398	10.11	.565	14.35	.208	5.28	.173	4.39
15 Plug	.928	23.57	.442	11.23	.548	13.92	.715	18.16	.208	5.28	.173	4.39
15 Socket	.928	23.57	.526	13.36	.548	13.92	.715	18.16	.208	5.28	.173	4.39
21 Plug	1.078	27.38	.592	15.04	.698	17.73	.865	21.97	.208	5.28	.173	4.39
21 Socket	1.078	27.38	.676	17.17	.698	17.73	.865	21.97	.208	5.28	.173	4.39
25 Plug	1.178	29.92	.692	17.58	.798	20.27	.965	24.51	.208	5.28	.173	4.39
25 Socket	1.178	29.92	.776	19.71	.798	20.27	.965	24.51	.208	5.28	.173	4.39
31 Plug	1.328	33.73	.842	21.39	.948	24.08	1.115	28.32	.208	5.28	.173	4.39
31 Socket	1.328	33.73	.926	23.52	.948	24.08	1.115	28.32	.208	5.28	.173	4.39
37 Plug	1.478	37.54	.992	25.20	1.098	27.89	1.265*	32.13	.208	5.28	.173	4.39
37 Socket	1.478	37.54	1.076	27.33	1.098	27.89	1.265*	32.13	.208	5.28	.173	4.39
51 Plug	1.428	36.27	.942	23.93	1.048	26.62	1.215	30.86	.250	6.35	.220	5.59
51 Socket	1.428	36.27	1.026	26.06	1.048	26.62	1.215	30.86	.250	6.35	.220	5.59

Panel Mounting Dimensions

Pin and socket, rear mounted

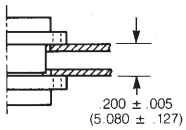

Pin and socket, front mounted

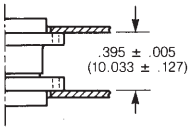

Pin, front mounted
Socket, rear mounted

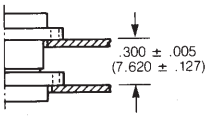

Panel Cutout Dimensions

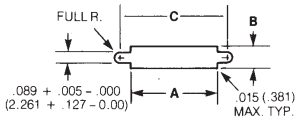

Figure 1. Front Mounting

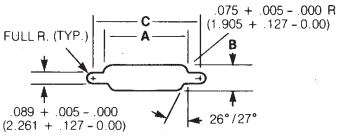

Figure 2. Rear Mounting

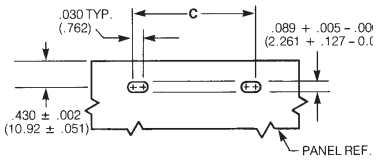

Figure 3. Edgeboard Mounting

No. of Contacts	Figure Number	A +.004 -.000 in	A (.101) (.000) mm	B +.004 -.000 in	B (.101) (.000) mm	C +.005 -.000 in	C (.127) (.000) mm
9	1	.408	10.36	.172	4.37	.570	14.48
	2	.373	9.47	.216	5.49	.570	14.48
	3	-	-	-	-	.570	14.48
15	1	.558	14.17	.172	4.37	.720	18.29
	2	.523	13.28	.216	5.49	.720	18.29
	3	-	-	-	-	.720	18.29
21	1	.708	17.98	.172	4.37	.870	22.10
	2	.674	17.12	.216	5.49	.870	22.10
	3	-	-	-	-	.870	22.10
25	1	.808	20.52	.172	4.37	.970	24.64
	2	.774	19.66	.216	5.49	.970	24.64
	3	-	-	-	-	.970	24.64
31	1	.958	24.33	.172	4.37	1.120	28.45
	2	.924	23.47	.216	5.49	1.120	28.45
	3	-	-	-	-	1.120	28.45
37	1	1.108	28.14	.172	4.37	1.270	32.26
	2	1.074	27.28	.216	5.49	1.270	32.26
	3	-	-	-	-	1.270	32.26
51	1	1.058	26.87	.215	5.46	1.220	30.99
	2	1.024	26.01	.259	6.58	1.220	30.99
	3	-	-	-	-	1.220	30.99

Dura-Con High Reliability Metal Shell

.050" (1.27mm) Density
Solder Cup/Wire
D-Microminiature

Cinch

Features

- ***Both plug and socket available in 9, 15, 21, 25, 31, 37, 51, and 100 positions.***
- ***Several styles of mounting are available for cable-to-cable, cable-to-panel mount, and cable-to-board mount.***
- ***Aluminum shell provides extra strength and EMI/RFI shielding capability. Plating options available.***
- ***Silicone elastomer compression interfacial seal protects contacts from moisture and humidity and isolates contacts from each other and the metal shell.***
- ***Meets requirements of MIL-C-83513 except where noted.***
- ***Rugged twist-pin contacts resistant to shock and vibration make metal shell Dura-Con an excellent choice for harsh environments such as airborne or space applications.***

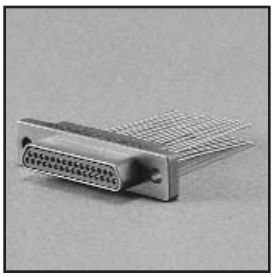

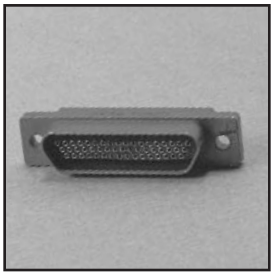

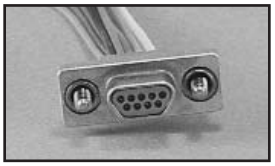

Materials

Insulator: UL94V-0 rated glass-filled polyester or diallyl phthalate
Contacts: Pins - Copper alloy, Sockets - Copper alloy (machined)
Contact Plating: .000050 in gold
Shell: Aluminum alloy
Shell Plating: Yellow chromate over cadmium (std.) or electroless nickel

Environmental

Operating Temperature: -55°C to +135°C

Electrical

Current Rating: 3 Amps maximum
Withstanding Voltage: 600 VAC RMS @ sea level
Contact Resistance: 8 milliohms maximum

Mechanical

Individual Contact: 6 oz. (170.40 g) maximum insertion; 0.5 oz. (14.20 g) minimum withdrawal
Mating / Unmating Force: See table

No. of Contacts	Maximum Mating Force Lb.	Maximum Mating Force Kg	Minimum Unmating Force Lb.	Minimum Unmating Force Kg
9	5.63	2.56	.28	.13
15	9.38	4.26	.47	.21
21	13.13	5.96	.66	.30
25	15.63	7.10	.78	.35
31	19.38	8.80	.97	.44
37	23.13	10.50	1.16	.53
51	31.88	14.47	1.59	.72
100	62.50	28.38	3.13	1.42

Contact Arrangements

(Face view of pin insert)
(Use reverse order for socket side)

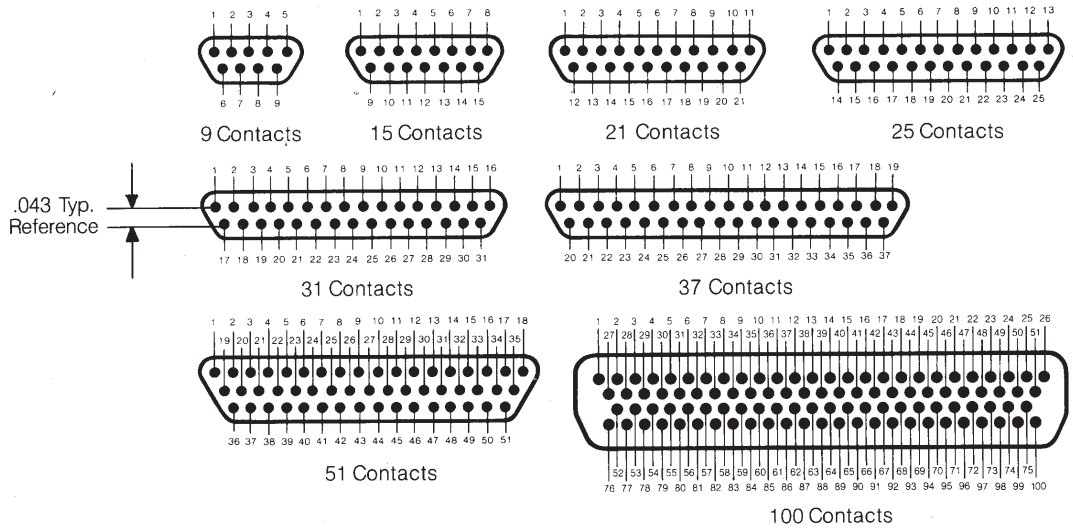

Ordering Information

DC D M 37 P 6 E 2-18.0 K N

Cinch Dura-Con D Connector

Insulator Type
C = Diallyl Phthalate Glass-Reinforced
D = Thermoplastic Glass-Reinforced

Mounting Type
M = Screw Mount Metal Shell

No. of Contacts
9, 15, 21, 25, 31, 37, 51, 100

Contact Type
P = Pin (Plug)
S = Socket (Receptacle)

Wire Size in AWG
5 = 25 AWG Solid Copper
6 = 26 AWG Stranded
S = Solder cup
(Skip to Mounting Hardware)

Wire Type
C = Solid Copper (Uninsulated)
E = MIL-W-16878/4, 7 Strand

(Consult factory for non-standard wire types)

Shell Plating
***No Letter** = Yellow Chromate over Cadmium
N = Electroless Nickel

Mounting Hardware**
B = No Hardware
F = Float Mount
R = Reverse Float Mount
K = Jackscrew (Standard)
L = Jackscrew (Low Profile)
P = Jackpost, Size 9 through 51 MIL-C-83513/5-07
Size 100 MIL-C-83513/5-17

Lead Length in inches***
00.5 Solid copper wire only
01.0 Solid copper wire only
02.0 Solid copper wire only
18.0 Stranded wire only
24.0 Stranded wire only
36.0 Stranded wire only
48.0 Stranded wire only

Insulation Color or Wire Finish
1 = White
***2** = Yellow (Stranded Wire)
3 = Tin-Plated
***4** = Gold-Plated (Solid Wire)
***5** = Color Coded Per MIL-Std. 681, System 1. (Stranded Wire Only)

***** - Indicates Cinch std. option.
******- See p. 5-12 for std. hardware dims. See p. 5-13 for non-std. hardware & p. 5-31 for Mil spec. hardware both sold separately.
*******- Length Tolerance: solid wire = ± 3/32", standard wire = ± 1/4".

Connector Dimensions - Metal Shell

Plug

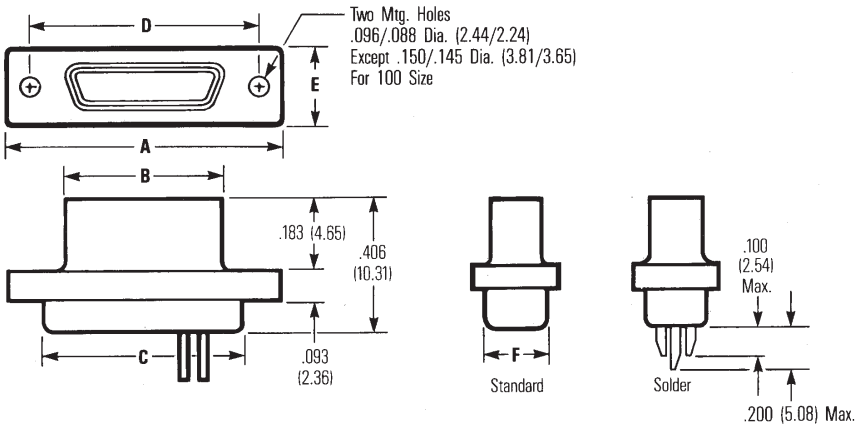

Socket

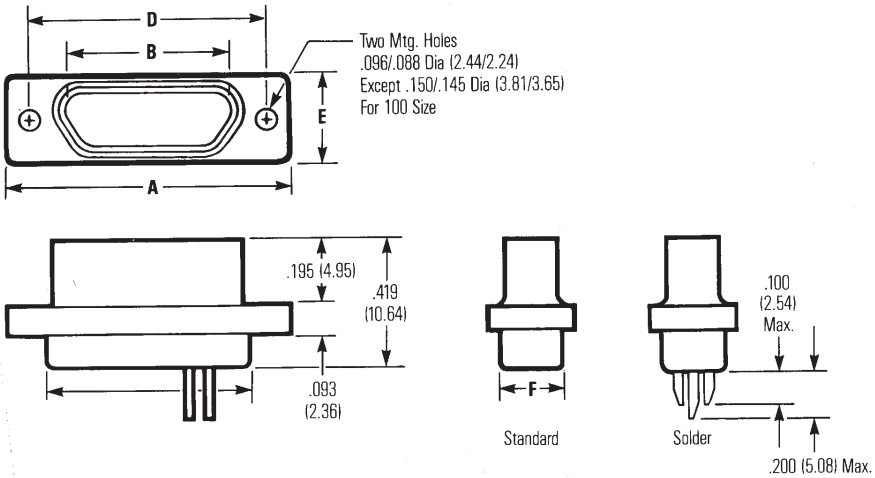

No. of Contacts	A ± .010 (.254) in	A ± .010 (.254) mm	B Max. in	B Max. mm	C +.010 (.254) -.018 (.457) in	C +.010 (.254) -.018 (.457) mm	D ± .005 (.127) in	D ± .005 (.127) mm	E ± .010 (.254) in	E ± .010 (.254) mm	F Max. in	F Max. mm
9 Plug	.775	19.68	.333	8.46	.390	9.91	.565	14.35	.298	7.57	.270	6.86
9 Socket	.775	19.68	.396	10.06	.390	9.91	.565	14.35	.298	7.57	.270	6.86
15 Plug	.925	23.50	.483	12.27	.540	13.72	.715	18.16	.298	7.57	.270	6.86
15 Socket	.925	23.50	.546	13.87	.540	13.72	.715	18.16	.298	7.57	.270	6.86
21 Plug	1.075	27.30	.633	16.08	.690	17.53	.865	21.97	.298	7.57	.270	6.86
21 Socket	1.075	27.30	.696	17.68	.690	17.53	.865	21.97	.298	7.57	.270	6.86
25 Plug	1.175	29.84	.733	18.62	.790	20.07	.965	24.51	.298	7.57	.270	6.86
25 Socket	1.175	29.84	.796	20.22	.790	20.07	.965	24.51	.298	7.57	.270	6.86
31 Plug	1.325	33.66	.883	21.16	.940	23.88	1.115	28.32	.298	7.57	.270	6.86
31 Socket	1.325	33.66	.946	24.03	.940	23.88	1.115	28.32	.298	7.57	.270	6.86
37 Plug	1.475	37.46	1.033	26.24	1.090	27.69	1.265	32.13	.298	7.57	.270	6.86
37 Socket	1.475	37.46	1.096	27.84	1.090	27.69	1.265	32.13	.298	7.57	.270	6.86
51 Plug	1.425	36.20	.983	24.97	1.040	26.42	1.215	30.86	.341	8.66	.310	7.87
51 Socket	1.425	36.20	1.046	26.57	1.040	26.42	1.215	30.86	.341	8.66	.310	7.87
100 Plug	2.160	54.86	1.383	35.13	1.432	36.38	1.800	45.71	.384	9.75	.360	9.15
100 Socket	2.160	54.86	1.446	36.73	1.432	36.38	1.800	45.71	.384	9.75	.360	9.15

Panel Mounting Dimensions

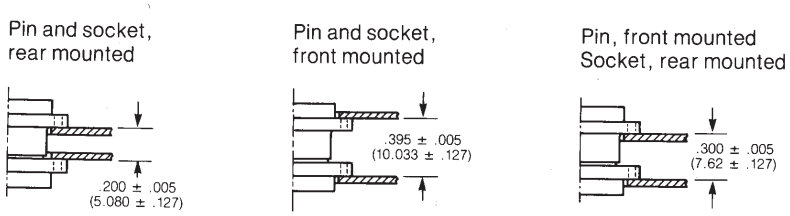

Panel Cutout Dimensions

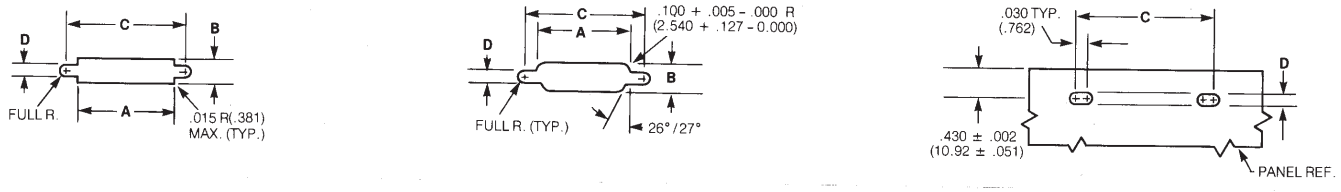

No. of Contacts	Figure Number	A +.004 -.000 in	A (.101) (.000) mm	B +.004 -.000 in	B (.101) (.000) mm	C +.005 -.000 in	C (.127) (.000) mm	D +.005 -.000 in	D (1.27) (.000) mm
9	1	.408	10.36	.270	6.86	.570	14.48	-	-
	2	.408	10.36	.256	6.50	.570	14.48	.089	2.26
	3	-	-	-	-	.570	14.48	-	-
15	1	.558	14.17	.270	6.86	.720	18.29	-	-
	2	.558	14.17	.256	6.50	.720	18.29	.089	2.26
	3	-	-	-	-	.720	18.29	-	-
21	1	.708	17.98	.270	6.86	.870	22.10	-	-
	2	.708	17.98	.256	6.50	.870	22.10	.089	2.26
	3	-	-	-	-	.870	22.10	-	-
25	1	.808	20.52	.270	6.86	.970	24.64	-	-
	2	.808	20.52	.256	6.50	.970	24.64	.089	2.26
	3	-	-	-	-	.970	24.64	-	-
31	1	.958	24.33	.270	6.86	1.120	28.45	-	-
	2	.958	24.33	.256	6.50	1.120	28.45	.089	2.26
	3	-	-	-	-	1.120	28.45	-	-
37	1	1.108	28.14	.270	6.86	1.270	32.26	-	-
	2	1.108	28.14	.256	6.50	1.270	32.26	.089	2.26
	3	-	-	-	-	1.270	32.26	-	-
51	1	1.058	26.87	.315	8.00	1.220	30.99	-	-
	2	1.058	26.87	.300	7.62	1.220	30.99	.089	2.26
	3	-	-	-	-	1.220	30.99	-	-
100	1	1.450	36.84	.361	9.17	1.805	45.86	.117	2.97
	2	1.562	39.68	.338	8.58	1.805	45.86	.117	2.97
	3	-	-	-	-	1.805	45.86	.117	2.97

Mounting Hardware
For Plastic & Metal Shell
Dura-Con Connectors

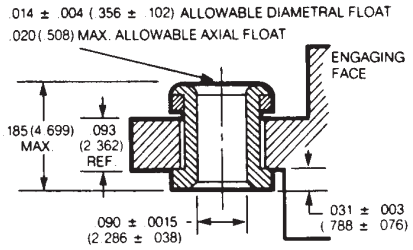

Float Mounting

Option "F"

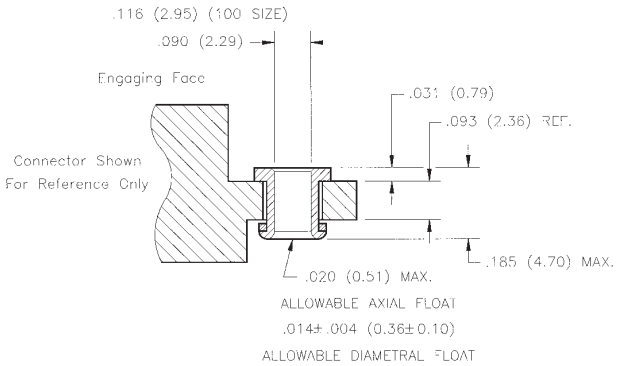

Reversed Float Mounting

Option "R"

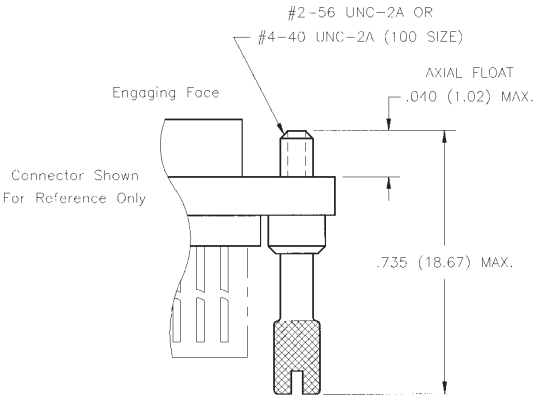

Standard Jackscrew

Option "K"

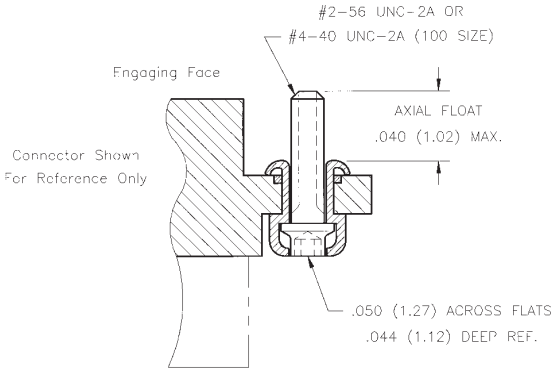

Low Profile Jackscrew

Option "L"

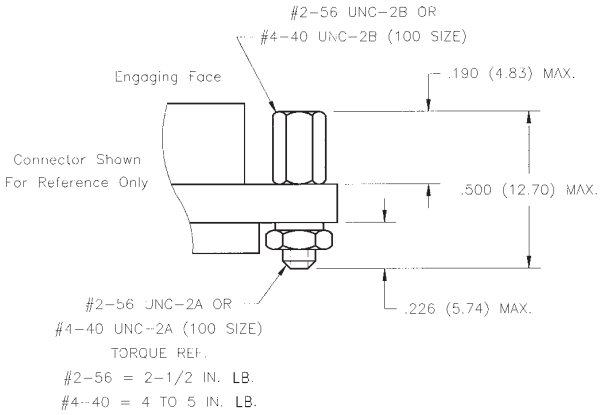

Removable Jackpost

Option "P"

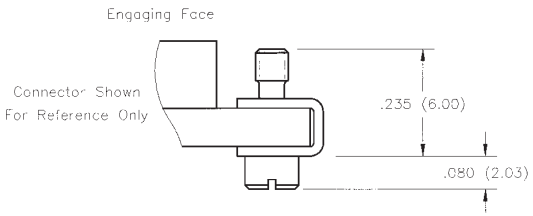

Screwlock Kit

P/N: DCSL1
Purchased Separately

Jackpost - Rear Panel Mount
(Purchased Separately)

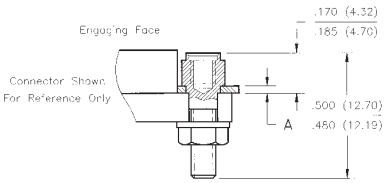

Jackpost Bushing
(for rear panel mounting)

Jackpost Part Number	Panel Thickness in	Panel Thickness mm	A Dimension in	A Dimension mm
DCJPRM094	.094	2.5	.092/.087	2.34/2.21
DCJPRM063	.063	1.6	.061/.056	1.55/1.42
DCJPRM047	.047	1.2	.047/.042	1.19/1.07
DCJPRM031	.031	0.8	.030/.025	0.76/0.64

Panel Cutout Dimensions
(Plug & Receptacle)

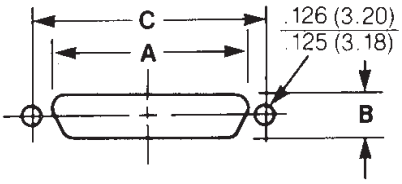

Part Number (by Shell Size)	A +.004 (.101) -.000 (.000) in	A mm	B +.004 (.101) -.000 (.000) in	B mm	C ±.005 (.127) in	C mm
9	.398	10.11	.249	6.32	.565	14.35
15	.548	13.92	.249	6.32	.715	18.16
21	.698	17.73	.249	6.32	.865	21.97
25	.798	20.27	.249	6.32	.965	24.51
31	.948	24.08	.249	6.32	1.115	28.34
37	1.098	27.89	.249	6.32	1.265	32.13
51	1.048	26.62	.292	7.42	1.215	30.86
100	1.448	36.78	.336	8.53	1.800	45.72

Dura-Con High Reliability Metal Shell

.050" (1.27mm) Density
PCB Mount Terminal Block

Cinch

Features

- *Plug & socket versions available in 9, 15, 21, 25, 31, 37, 51, and 100 positions.*
- *Flow-through design facilitates inspection and cleaning after soldering.*
- *All terminal block connectors use standard mounting hardware.*
- *Metal shell provides EMI/RFI shielding capability.*
- *Available in 3 styles: Straight mount, 90° right-angle mount, and 90° right-angle narrow profile mounting.*
- *Silicone elastomer interfacial seal protects contacts from moisture and isolates them from each other and from the metal shell.*
- *Meets requirements of MIL-C-83513.*
- *Choice of insulator materials.*

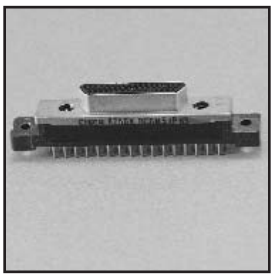

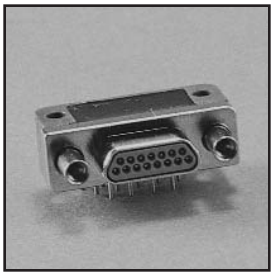

Materials

Insulator: UL94V-0 glass-filled polyester or diallyl phthalate

Contacts: Pins - Copper alloy, Sockets - Copper alloy (machined)

Contact Plating: .000050 in gold

Shell: Aluminum alloy

Shell Plating: Yellow chromate over cadmium (std.) or electroless nickel

Environmental

Operating Temperature: -55°C to +135°C

Electrical

Current Rating: 3 Amps maximum

Withstanding Voltage: 600 VAC RMS @ sea level, 150 VAC @ 70,000 ft.

Contact Resistance: 8 milliohms maximum

Insulation Resistance: 1,000 megohms min between adjacent pins

Mechanical

Individual Contact: 6 oz. (170.40 g) maximum insertion force; 0.5 oz. (14.20 g) minimum withdrawal force

Mating / Unmating Forces: See table

No. of Contacts	Maximum Mating Force Lb.	Maximum Mating Force Kg	Minimum Unmating Force Lb.	Minimum Unmating Force Kg
9	5.63	2.56	.28	.13
15	9.38	4.26	.47	.21
21	13.13	5.96	.66	.30
25	15.63	7.10	.78	.35
31	19.38	8.80	.97	.44
37	23.13	10.50	1.16	.53
51	31.88	14.47	1.59	.72
100	62.50	28.38	3.13	1.42

Contact Arrangements

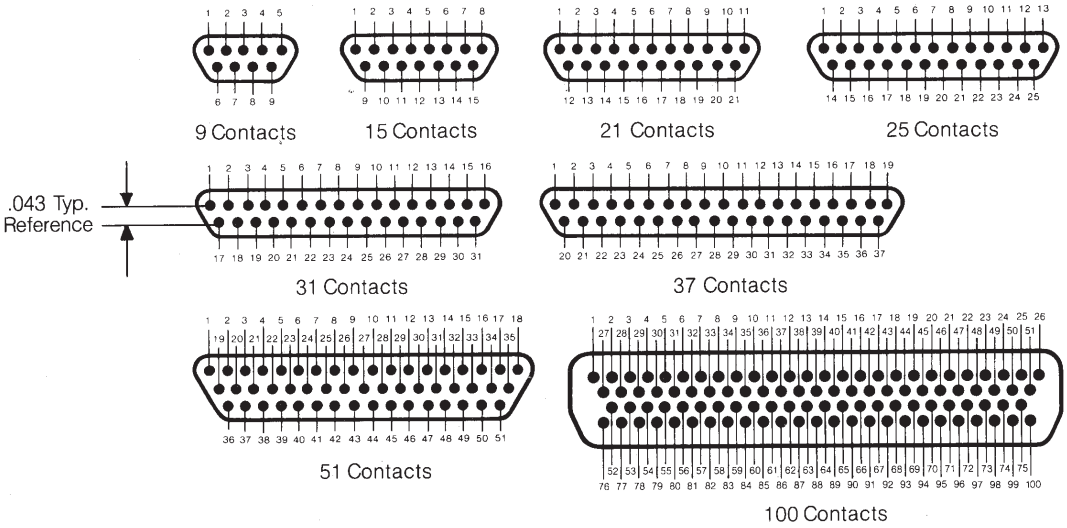

Ordering Information

DC D M 25 S BR -- --

Cinch Dura-Con D Connector

Insulator Type
C = Diallyl Phthalate Glass Reinforced
D = Thermoplastic Glass Reinforced

Mounting Type
M = Screw Mount Metal Shell

No. of Contacts
9, 15, 21, 25, 31, 37, 51, & 100

Contact Type
P = Pin (Plug)
S = Socket (Receptacle)

Shell Finish*
No Letter = Standard Yellow Chromate over Cadmium
N = Electroless Nickel

Hardware*
No Letter = Less Hardware
P = Jackpost

Termination Style
BR = 90° PCB
BS = Straight 180° PCB
CBR = 90° Narrow Profile PCB

* For other options consult factory.

90° Termination

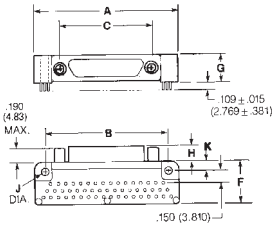

Recommended Board Layout

(As Viewed from Bottom of Terminal Block)

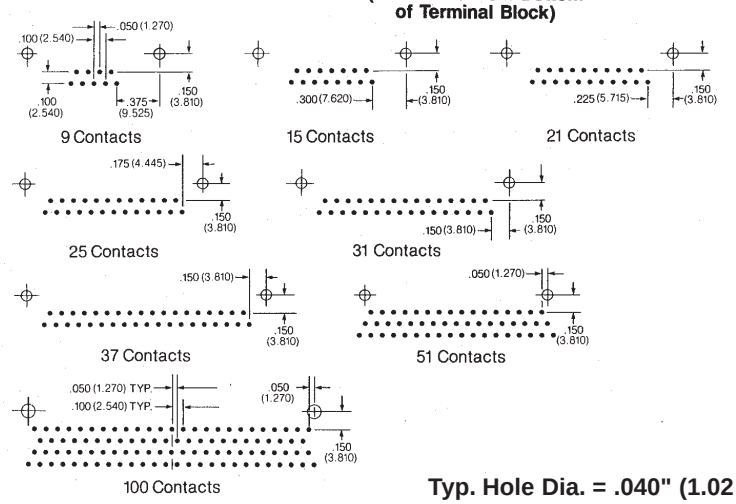

Typ. Hole Dia. = .040" (1.02 mm)

NOTE: For additional connector dimensions, see page 5-10.

No. of Contacts	A Max. in	A Max. mm	B ± .007 (0.18) in	B ± .007 (0.18) mm	C ± .005 (0.13) in	C ± .005 (0.13) mm	F Max. in	F Max. mm
9 Plug	1.390	35.31	1.150	29.21	.565	14.35	.465	11.81
9 Socket	1.390	35.31	1.150	29.21	.565	14.35	.465	11.81
15 Plug	1.540	39.12	1.300	33.02	.715	18.16	.465	11.81
15 Socket	1.540	39.12	1.300	33.02	.715	18.16	.465	11.81
21 Plug	1.690	42.93	1.450	36.83	.865	21.97	.465	11.81
21 Socket	1.690	42.93	1.450	36.83	.865	21.97	.465	11.81
25 Plug	1.790	45.47	1.550	39.37	.965	24.51	.465	11.81
25 Socket	1.790	45.47	1.550	39.37	.965	24.51	.465	11.81
31 Plug	2.040	51.82	1.800	45.72	1.115	28.32	.465	11.81
31 Socket	2.040	51.82	1.800	45.72	1.115	28.32	.465	11.81
37 Plug	2.340	59.44	2.100	53.34	1.265	32.13	.465	11.81
37 Socket	2.340	59.44	2.100	53.34	1.265	32.13	.465	11.81
51 Plug	1.875	47.63	1.600	40.64	1.215	30.86	.565	14.35
51 Socket	1.875	47.63	1.600	40.64	1.215	30.86	.565	14.35
100 Plug	2.780	70.61	2.500	63.50	1.800	45.72	.765	19.43
100 Socket	2.780	70.61	2.500	63.50	1.800	45.72	.765	19.43

No. of Contacts	G Max. in	G Max. mm	H Max. in	H Max. mm	J ± .005 (0.13) in	J ± .005 (0.13) mm	K ± .015 in	K ± .015 mm
9 Plug	.308	7.82	.190	4.83	.096	2.44	.125	3.18
9 Socket	.308	7.82	.200	5.08	.096	2.44	.125	3.18
15 Plug	.308	7.82	.190	4.83	.096	2.44	.125	3.18
15 Socket	.308	7.82	.200	5.08	.096	2.44	.125	3.18
21 Plug	.308	7.82	.190	4.83	.096	2.44	.125	3.18
21 Socket	.308	7.82	.200	5.08	.096	2.44	.125	3.18
25 Plug	.308	7.82	.190	4.83	.096	2.44	.125	3.18
25 Socket	.308	7.82	.200	5.08	.096	2.44	.125	3.18
31 Plug	.308	7.82	.190	4.83	.096	2.44	.125	3.18
31 Socket	.308	7.82	.200	5.08	.096	2.44	.125	3.18
37 Plug	.308	7.82	.190	4.83	.096	2.44	.125	3.18
37 Socket	.308	7.82	.200	5.08	.096	2.44	.125	3.18
51 Plug	.351	8.92	.190	4.83	.096	2.44	.125	3.18
51 Socket	.351	8.92	.200	5.08	.096	2.44	.125	3.18
100 Plug	.394	10.00	.190	4.83	.125	3.18	.225	5.72
100 Socket	.394	10.00	.200	5.08	.125	3.18	.225	5.72

Straight (180°) Termination

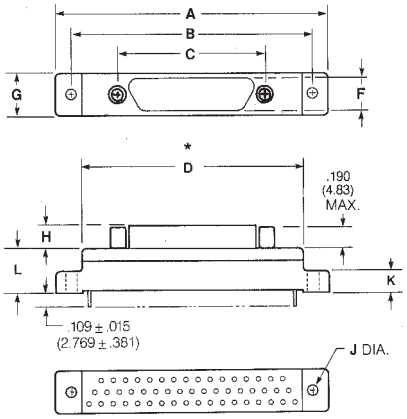

Recommended Board Layout

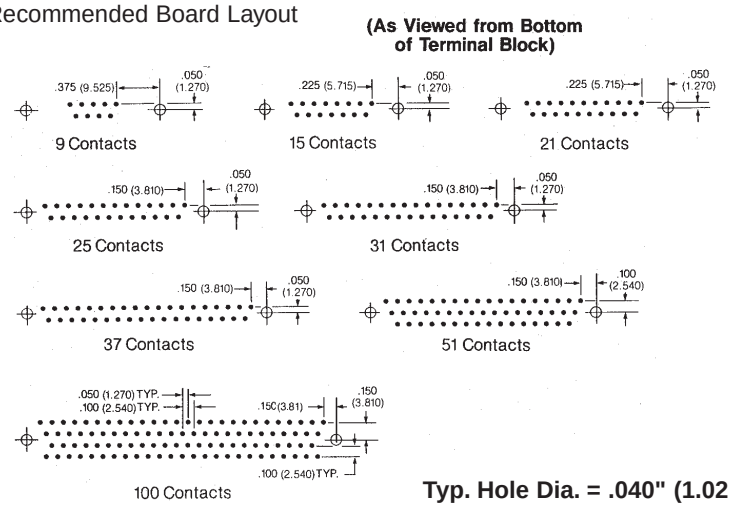

Typ. Hole Dia. = .040" (1.02 mm)

NOTE: For additional connector dimensions, see page 5-10.

No. of	A Max.		B ± .007 (0.18)		C ± .005 (0.13)		D Max.		G Max.	
Contacts	in	mm	in	mm	in	mm	in	mm	in	mm
9 Plug	1.390	35.31	1.150	29.21	.565	14.35	.885	22.48	.308	7.75
9 Socket	1.390	35.31	1.150	29.21	.565	14.35	.885	22.48	.308	7.75
15 Plug	1.390	35.31	1.150	29.21	.715	18.16	.945	24.0	.308	7.75
15 Socket	1.390	35.31	1.150	29.21	.715	18.16	.945	24.0	.308	7.75
21 Plug	1.690	42.93	1.450	36.83	.865	21.97	1.185	30.09	.308	7.75
21 Socket	1.690	42.93	1.450	36.83	.865	21.97	1.185	30.09	.308	7.75
25 Plug	1.740	44.20	1.500	38.10	.965	24.51	1.275	32.38	.308	7.75
25 Socket	1.740	44.20	1.500	38.10	.965	24.51	1.275	32.38	.308	7.75
31 Plug	2.040	51.82	1.800	45.72	1.115	28.32	1.575	40.00	.308	7.75
31 Socket	2.040	51.82	1.800	45.72	1.115	28.32	1.576	40.00	.308	7.75
37 Plug	2.340	59.44	2.100	53.34	1.265	32.13	1.875	47.62	.308	7.75
37 Socket	2.340	59.44	2.100	53.34	1.265	32.13	1.875	47.62	.308	7.75
51 Plug	2.270	57.66	2.000	50.80	1.215	30.86	1.775	45.08	.351	8.92
51 Socket	2.270	57.66	2.000	50.80	1.215	30.86	1.775	45.08	.351	8.92
100 Plug	3.070	77.98	2.800	71.12	1.800	45.72	2.585	65.55	.455	11.56
100 Socket	3.070	77.98	2.800	71.12	1.800	45.72	2.585	65.65	.455	11.56

No. of	H Max.		J ± .005 (0.13)		K Max.		L Max.	
Contacts	in	mm	in	mm	in	mm	in	mm
9 Plug	.190	4.83	.096	2.44	.165	4.19	.355	9.02
9 Socket	.200	5.08	.096	2.44	.165	4.19	.355	9.02
15 Plug	.190	4.83	.096	2.44	.165	4.19	.355	9.02
15 Socket	.200	5.08	.096	2.44	.165	4.19	.355	9.02
21 Plug	.190	4.83	.096	2.44	.165	4.19	.355	9.02
21 Socket	.200	5.08	.096	2.44	.165	4.19	.355	9.02
25 Plug	.190	4.83	.096	2.44	.165	4.19	.355	9.02
25 Socket	.200	5.08	.096	2.44	.165	4.19	.355	9.02
31 Plug	.190	4.83	.096	2.44	.165	4.19	.355	9.02
31 Socket	.200	5.08	.096	2.44	.165	4.19	.355	9.02
37 Plug	.190	4.83	.096	2.44	.165	4.19	.355	9.02
37 Socket	.200	5.08	.096	2.44	.165	4.19	.355	9.02
51 Plug	.190	4.83	.096	2.44	.165	4.19	.355	9.02
51 Socket	.200	5.08	.096	2.44	.165	4.19	.355	9.02
100 Plug	.190	4.83	.125	3.18	.300	7.62	.550	13.97
100 Socket	.200	5.08	.125	3.18	.300	7.62	.550	13.97

90° Narrow Termination

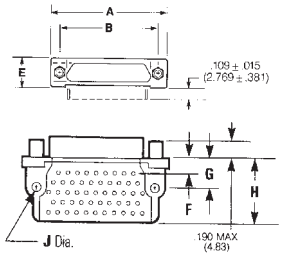

Recommended Board Layout

(As Viewed from Bottom of Terminal Block)

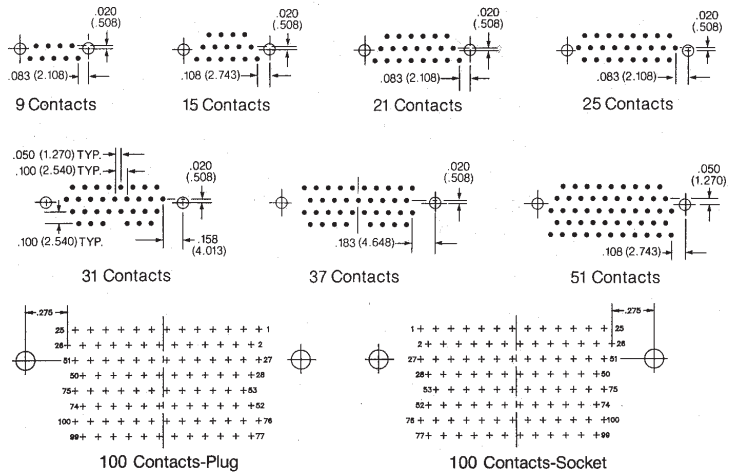

NOTE: For additional connector dimensions, see page 5-10.

Typ. Hole Dia. = .040" (1.02 mm)

No. of Contacts	A Max. in	A Max. mm	B ± .005 (0.13) in	B ± .005 (0.13) mm	C Max. in	C Max. mm
9 Plug	.785	19.94	.565	14.35	.308	7.82
9 Socket	.785	19.94	.565	14.35	.308	7.82
15 Plug	.935	23.75	.715	18.16	.308	7.82
15 Socket	.935	23.75	.715	18.16	.308	7.82
21 Plug	1.085	27.56	.865	21.97	.308	7.82
21 Socket	1.085	27.56	.865	21.97	.308	7.82
25 Plug	1.085	30.10	.965	24.51	.308	7.82
25 Socket	1.185	30.10	.965	24.51	.308	7.82
31 Plug	1.335	33.91	1.115	28.32	.308	7.82
31 Socket	1.335	33.91	1.115	28.32	.308	7.82
37 Plug	1.485	37.72	1.265	32.13	.308	7.82
37 Socket	1.485	37.72	1.265	32.13	.308	7.82
51 Plug	1.435	36.45	1.215	30.86	.351	8.92
51 Socket	1.435	36.45	1.215	30.86	.351	8.92
100 Plug	2.175	55.25	1.800	45.72	.394	10.00
100 Socket	2.175	55.25	1.800	45.72	.394	10.00

No. of Contacts	F ± .010 (0.25) in	F ± .010 (0.25) mm	G ± .010 (0.25) in	G ± .010 (0.25) mm	H Max. in	H Max. mm	J ± .005 (0.13) in	J ± .005 (0.13) mm
9 Plug	.230	5.84	.250	6.35	.420	10.67	.096	2.44
9 Socket	.230	5.84	.250	6.35	.420	10.67	.096	2.44
15 Plug	.130	3.30	.250	6.35	.420	10.67	.096	2.44
15 Socket	.130	3.30	.250	6.35	.420	10.67	.096	2.44
21 Plug	.130	3.30	.250	6.35	.420	10.67	.096	2.44
21 Socket	.130	3.30	.250	6.35	.420	10.67	.096	2.44
25 Plug	.130	3.30	.250	6.35	.420	10.67	.096	2.44
25 Socket	.130	3.30	.250	6.35	.420	10.67	.096	2.44
31 Plug	.130	3.30	.250	6.35	.520	13.21	.996	2.44
31 Socket	.130	3.30	.250	6.35	.520	13.21	.096	2.44
37 Plug	.130	3.30	.250	6.35	.520	13.21	.096	2.44
37 Socket	.130	3.30	.250	6.35	.520	13.21	.096	2.44
51 Plug	.150	3.81	.300	7.62	.650	16.51	.096	2.44
51 Socket	.150	3.81	.300	7.62	.650	16.51	.096	2.44
100 Plug	.200	5.08	.400	10.16	1.000	25.40	.125	3.18
100 Socket	.200	5.08	.400	10.16	1.000	25.40	.125	3.18

Dura-Con High Reliability MIL-C-83513

.050" (1.27mm) Density
Solder Cup/Wire
D-Microminiature

Cinch

Features

- ***All-plastic and metal shell wire versions available in solder cup, gold-plated solid wire, and insulated stranded wire.***
- ***PCB mount "terminal block" type connectors available in straight or right angle.***
- ***Sizes offered - 9, 15, 21, 25, 31, 35, 51, and 100 (metal shell only).***
- ***All products are qualified to the requirements of MIL-C-83513 and marked with the M83513 part number.***
- ***Optional shell platings and insulator materials offer high performance in harsh environments.***
- ***Mounting hardware per MIL-C-83513.***

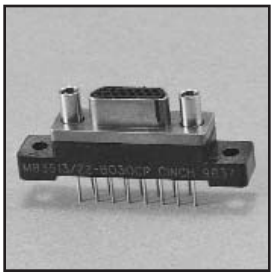

Materials

Insulator: UL94V-0 rated glass-filled polyester per MIL-M-24519 or diallyl phthalate (DAP) per MIL-M-14.

Contacts: Pins - Copper alloy, Sockets - Copper alloy

Contact Plating: .000050 in gold per MIL-G-45204

Shell Material (Metal Shell Only): Aluminum alloy

Shell Plating (Metal Shell Only): Yellow chromate over cadmium (std.) or electroless nickel

Environmental

Operating Temperature: -55°C to +125°C

Electrical

Current Rating: 3 Amps maximum

Withstanding Voltage: 600 VAC RMS @ sea level

Contact Resistance: 8 milliohms maximum

Mechanical

Durability: 500 mate/unmate cycles

Individual Contact: Forces 6 oz. (170.40 g) maximum insertion; 0.5 oz. (14.20 g) minimum withdrawal

Mating / Unmating Force: See table

No. of Contacts	Maximum Mating Force Lb.	Maximum Mating Force Kg	Minimum Unmating Force Lb.	Minimum Unmating Force Kg
9	5.63	2.56	.28	.13
15	9.38	4.26	.47	.21
21	13.13	5.96	.66	.30
25	15.63	7.10	.78	.35
31	19.38	8.80	.97	.44
37	23.13	10.50	1.16	.53
51	31.88	14.47	1.59	.72

Metal Shell

Contact Arrangements

(Face view of pin insert)
(Use reverse order for socket side)

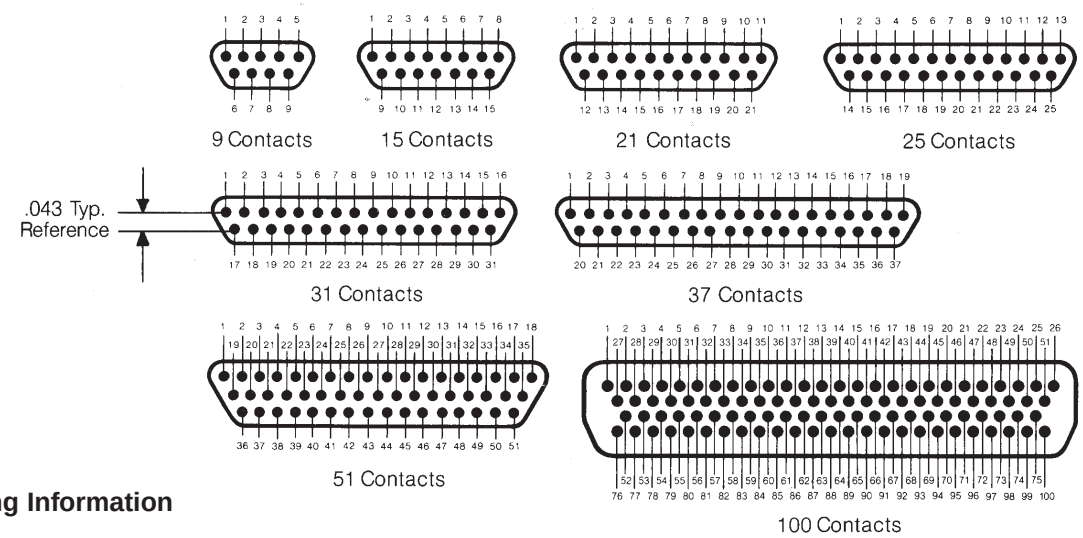

Ordering Information

M83513/04 - A 03 C

Connector Type

01 - Metal Shell D Plugs with Solder Cup Termination

02 - Metal Shell D Sockets with Solder Cup Termination

03 - Metal Shell D Plugs with Wire Leads

04 - Metal Shell D Sockets with Wire Leads

Insert Arrangements
(No. of Contacts)
A = 9
B = 15
C = 21
D = 25
E = 31
F = 37
G = 51
H = 100

Shell Finish
C = Cadmium
N = Electroless Nickel

Wire Type (Use only for /03 & /04, otherwise omit)
01 - M22759/11-26-9, 18 inches, White (see note below)
02 - M22759/11-26-9, 36 inches, White (see note below)
03 - M22759/11-26-( ), 18 inches, Color Coded (see note below)
04 - M22759/11-26-( ), 36 inches, Color Coded (see note below)
05 - QQ-W-343, 25 AWG, 0.5 inch, Gold-Plated
06 - QQ-W-343, 25 AWG, 1.0 inch, Gold-Plated
07 - QQ-W-343, 25 AWG, 0.5 inch, Tin-Plated
08 - QQ-W-343, 25 AWG, 1.0 inch, Tin-Plated
09 - M22759/33-26-9, 18 inches, White
10 - M22759/33-26-9, 36 inches, White
11 - M22759/33-26-( ), 18 inches, Color Coded
12 - M22759/33-26-( ), 36 inches, Color Coded
13 - M22759/11-26-9, 72 inches, White
14 - M22759/11-26-( ), 72 inches, Color Coded
15 - M22759/33-26-9, 72 inches, White
16 - M22759/33-26-( ), 72 inches, Color Coded

Note: See page 5-31 for M83513 mounting hardware.

Connector Dimensions - Metal Shell

Plug

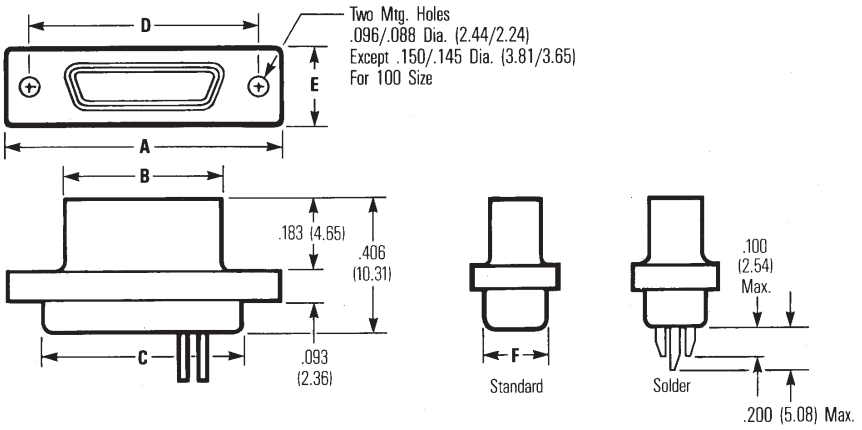

Socket

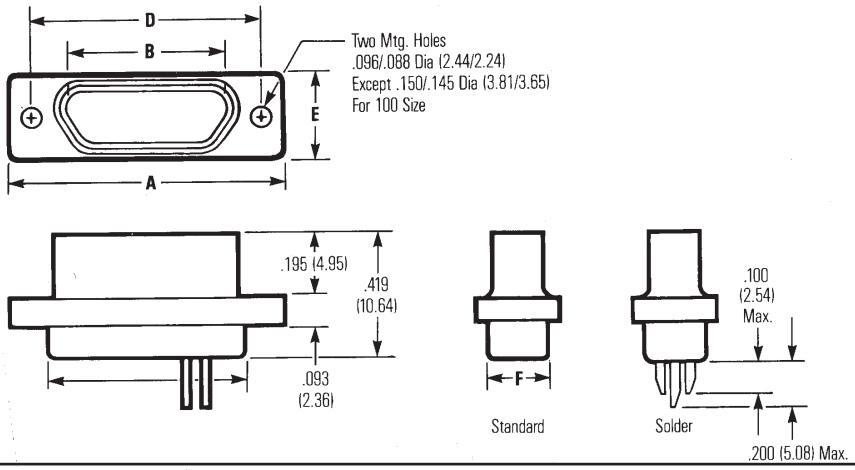

No. of Contacts	A ± .010" (.254) in	A ± .010" (.254) mm	B Max. (Plug) Min. (Socket) in	B Max. (Plug) Min. (Socket) mm	C + .010" (.254) - .018" (.457) in	C + .010" (.254) - .018" (.457) mm	D ± .005" (.127) in	D ± .005" (.127) mm	E ± .010" (.254) in	E ± .010" (.254) mm	F Max. in	F Max. mm
9 Plug	.775	19.68	.3338	8.48	.390	9.91	.565	14.35	.298	7.57	.270	6.68
9 Socket	.775	19.68	.3342	8.49	.390	9.91	.565	14.35	.298	7.57	.270	6.68
15 Plug	.925	23.50	.4838	12.29	.540	13.72	.715	18.16	.298	7.57	.270	6.68
15 Socket	.925	23.50	.4842	12.30	.540	13.72	.715	18.16	.298	7.57	.270	6.68
21 Plug	1.075	27.30	.6338	16.10	.690	17.53	.865	21.97	.298	7.57	.270	6.68
21 Socket	1.075	27.30	.6342	16.11	.690	17.53	.865	21.97	.298	7.57	.270	6.68
25 Plug	1.175	29.84	.7338	18.64	.790	20.07	.965	24.51	.298	7.57	.270	6.68
25 Socket	1.175	29.84	.7342	18.65	.790	20.07	.965	24.51	.298	7.57	.270	6.68
31 Plug	1.325	33.66	.8838	22.45	.940	23.88	1.115	28.32	.298	7.57	.270	6.68
31 Socket	1.325	33.66	.8842	22.46	.940	23.88	1.115	28.32	.298	7.57	.270	6.68
37 Plug	1.475	37.46	1.0338	26.26	1.090	27.69	1.265	32.13	.298	7.57	.270	6.68
37 Socket	1.475	37.46	1.0342	26.27	1.090	27.69	1.265	32.13	.298	7.57	.270	6.68
51 Plug	1.425	36.20	.9838	24.99	1.040	26.42	1.215	30.86	.341	8.66	.310	7.87
51 Socket	1.425	36.20	.9842	25.00	1.040	26.42	1.215	30.86	.341	8.66	.310	7.87
100 Plug	2.160	54.86	1.3838	35.15	1.432	36.38	1.800	45.71	.384	9.75	.360	9.15
100 Socket	2.160	54.86	1.3842	35.16	1.432	36.38	1.800	45.71	.384	9.75	.360	9.15

Panel Mounting Dimensions - Metal Shell

Panel Mounting Dimensions

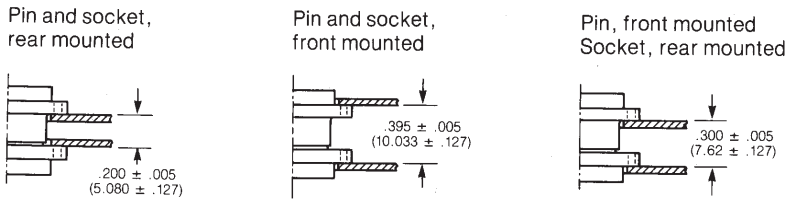

Panel Cutout Dimensions - Metal Shell

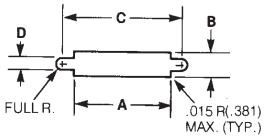

Front Mounting

No. of Contacts	A +.004" (.101mm) -.000" (.000mm) in	A mm	B +.004" (.101mm) -.000" (.000mm) in	B mm	C +.005" (.127mm) -.000" (.000mm) in	C mm	D +.005" (.127mm) -.000" (.000mm) in	D mm
9	.408	10.36	.270	6.86	.570	14.48	.089	2.26
15	.558	14.17	.270	6.86	.720	14.48	.089	2.26
21	.708	17.98	.270	6.86	.870	22.10	.089	2.26
25	.808	20.52	.270	6.86	.970	24.64	.089	2.26
31	.958	24.33	.270	6.86	1.120	28.45	.089	2.26
37	1.108	28.14	.270	6.86	1.270	32.26	.089	2.26
51	1.058	26.87	.315	8.00	1.220	30.99	.089	2.26
100	1.450	36.84	.361	9.17	1.805	45.86	.117	2.97

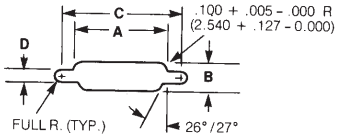

Rear Mounting

No. of Contacts	A +.004" (.101mm) -.000" (.000mm) in	A mm	B +.004" (.101mm) -.000" (.000mm) in	B mm	C +.005" (.127mm) -.000" (.000mm) in	C mm	D +.005" (.127mm) -.000" (.000mm) in	D mm
9	.408	10.36	.256	6.50	.570	14.48	.089	2.26
15	.558	14.17	.256	6.50	.720	18.29	.089	2.26
21	.708	17.98	.256	6.50	.870	22.10	.089	2.26
25	.808	20.52	.256	6.50	.970	24.64	.089	2.26
31	.958	24.33	.256	6.50	1.120	28.45	.089	2.26
37	1.108	28.14	.256	6.50	1.270	32.26	.089	2.26
51	1.058	26.87	.300	7.62	1.220	30.99	.089	2.26
100	1.450	36.84	.338	8.58	1.805	45.86	.117	2.97

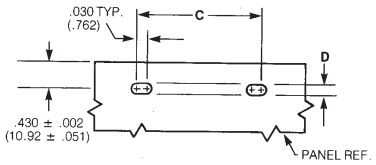

Edgeboard Mounting

No. of Contacts	C +.005" (.127mm) -.000" (.000mm) in	C mm	D +.005" (.127mm) -.000" (.000mm) in	D mm
9	.570	14.48	.089	2.26
15	.720	18.29	.089	2.26
21	.870	22.10	.089	2.26
25	.970	24.64	.089	2.26
31	1.120	28.45	.089	2.26
37	1.270	32.26	.089	2.26
51	1.220	30.99	.089	2.26
100	1.805	45.86	.117	2.97

Plastic Shell

Contact Arrangements

(Face view of pin insert)
(Use reverse order for socket side)

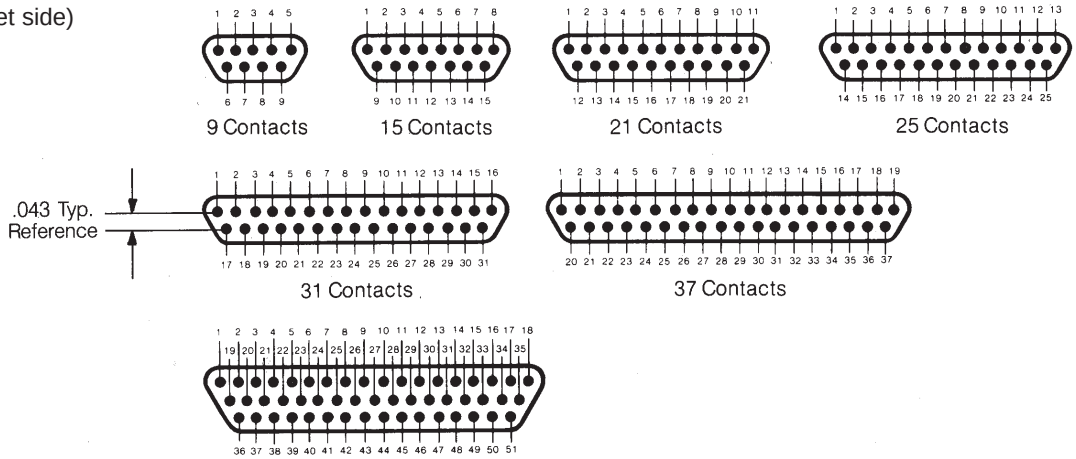

Ordering Information

M83513/06-A 04

Connector Type

06 - Plastic Shell Plugs with Solder Cup Termination

07 - Plastic Shell Sockets with Solder Cup Termination

08 - Plastic Shell Plugs with Wire Leads

09 - Plastic Shell Sockets with Wire Leads

Insert Arrangements
(No. of Contacts)

A = 9
B = 15
C = 21
D = 25
E = 31
F = 37
G = 51

Wire Type (Use only for /08 & /09, otherwise omit)

01 - M22759/11-26-9, 18 inches, White
02 - M22759/11-26-9, 36 inches, White
03 - M22759/11-26-( ), 18 inches, Color Coded
04 - M22759/11-26-( ), 36 inches, Color Coded
05 - QQ-W-343, 25 AWG, 0.5 inch, Gold-Plated
06 - QQ-W-343, 25 AWG, 1.0 inch, Gold-Plated
07 - QQ-W-343, 25 AWG, 0.5 inch, Tin-Plated
08 - QQ-W-343, 25 AWG, 1.0 inch, Tin-Plated
09 - M22759/33-26-9, 18 inches, White
10 - M22759/33-26-9, 36 inches, White
11 - M22759/33-26-( ), 18 inches, Color Coded
12 - M22759/33-26-( ), 36 inches, Color Coded
13 - M22759/11-26-9, 72 inches, White
14 - M22759/11-26-( ), 72 inches, Color Coded
15 - M22759/33-26-9, 72 inches, White
16 - M22759/33-26-( ), 72 inches, Color Coded

Note: See page 5-31 for M83513 mounting hardware.

Shell Dimensions - (All-Plastic Version)

Plug

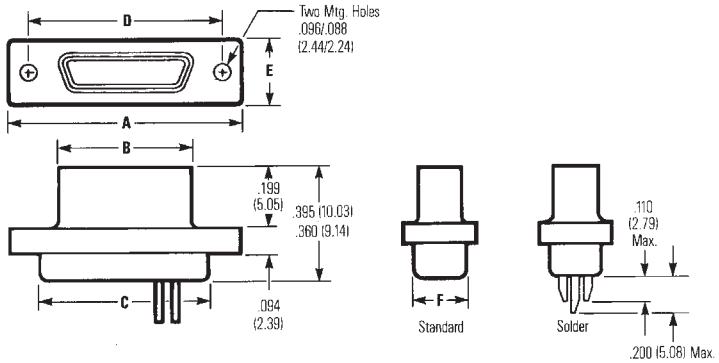

Socket

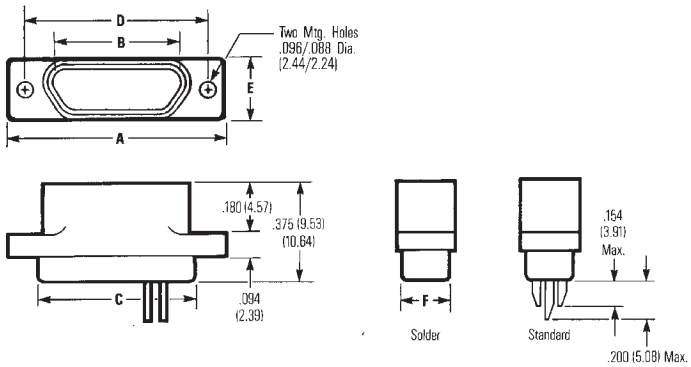

No. of Contacts	A ±.010" (.254) in	A mm	B Max. (Plug) Min. (Socket) in	B mm	C +.010" (.254) -.018" (.457) in	C mm	D ±.005" (.127) in	D mm	E ±.010" (.254) in	E mm	F Max. in	F Max. mm
9 Plug	.778	19.76	.2918	7.41	.398	10.11	.565	14.35	.208	5.28	.173	4.39
9 Socket	.778	19.76	.2922	7.42	.398	10.11	.565	14.35	.208	5.28	.173	4.39
15 Plug	.928	23.57	.4418	11.22	.548	13.92	.715	18.16	.208	5.28	.173	4.39
15 Socket	.928	23.57	.4422	11.23	.548	13.92	.715	18.16	.208	5.28	.173	4.39
21 Plug	1.078	27.38	.5918	15.03	.698	17.73	.865	21.97	.208	5.28	.173	4.39
21 Socket	1.078	27.38	.5922	15.04	.698	17.73	.865	21.97	.208	5.28	.173	4.39
25 Plug	1.178	29.92	.6918	17.57	.798	20.27	.965	24.51	.208	5.28	.173	4.39
25 Socket	1.178	29.92	.6922	17.58	.798	20.27	.965	24.51	.208	5.28	.173	4.39
31 Plug	1.328	33.73	.8418	21.38	.948	24.08	1.115	28.32	.208	5.28	.173	4.39
31 Socket	1.328	33.73	.8422	21.39	.948	24.08	1.115	28.32	.208	5.28	.173	4.39
37 Plug	1.478	37.54	.9918	25.19	1.098	27.89	1.265	32.13	.208	5.28	.173	4.39
37 Socket	1.478	37.54	.9922	25.20	1.098	27.89	1.265	32.13	.208	5.28	.173	4.39
51 Plug	1.428	36.27	.9418	23.92	1.048	26.62	1.215	30.86	.250	6.35	.220	5.59
51 Socket	1.428	36.27	.9422	23.93	1.048	26.62	1.215	30.86	.250	6.35	.220	5.59

Panel Mounting Dimensions - All-Plastic

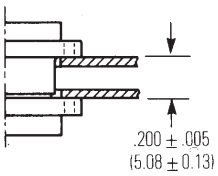

Plug and socket, rear mounted

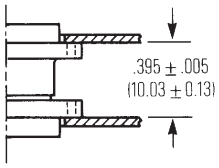

Plug and socket, front mounted

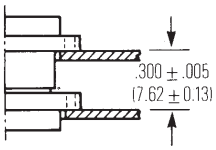

Plug, front mounted; Socket, rear mounted

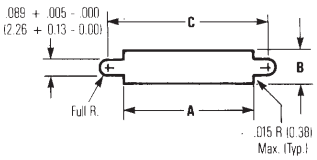

Front Mounting

Panel Cutout Dimensions

No. of Contacts	A +.004" (.101mm) -.000" (.000mm) in	A mm	B +.004" (.101mm) -.000" (.000mm) in	B mm	C +.005" (.127mm) -.000" (.000mm) in	C mm
9	.408	10.36	.172	4.37	.570	14.48
15	.558	14.17	.172	4.37	.720	14.48
21	.708	17.98	.172	4.37	.870	22.10
25	.808	20.52	.172	4.37	.970	24.64
31	.958	24.33	.172	4.37	1.120	28.45
37	1.108	28.14	.172	4.37	1.270	32.26
51	1.058	26.87	.215	5.46	1.220	30.99

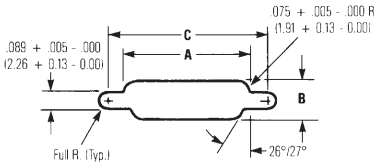

Rear Mounting

Rear Cutout Dimensions

No. of Contacts	A +.004" (.101mm) -.000" (.000mm) in	A mm	B +.004" (.101mm) -.000" (.000mm) in	B mm	C +.005" (.127mm) -.000" (.000mm) in	C mm
9	.373	9.47	.216	5.49	.570	14.48
15	.523	13.28	.216	5.49	.720	18.29
21	.674	17.12	.216	5.49	.870	22.10
25	.774	19.66	.216	5.49	.970	24.64
31	.924	23.47	.216	5.49	1.120	28.45
37	1.074	27.28	.216	5.49	1.270	32.26
51	1.024	26.01	.259	6.58	1.220	30.99

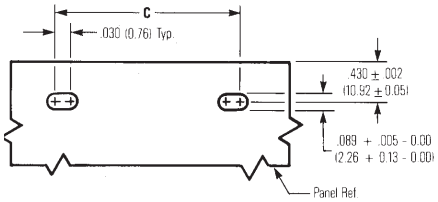

Edgeboard Mounting

Edgeboard Mounting Cutout Dimensions

No. of Contacts	D +.005" (.127mm) -.000" (.000mm) in	D mm
9	.570	14.48
15	.720	18.29
21	.870	22.10
25	.970	24.64
31	1.120	28.45
37	1.270	32.26
51	1.220	30.99

Terminal Block

Contact Arrangements

(Face view of pin insert)
(Use reverse order for socket side)

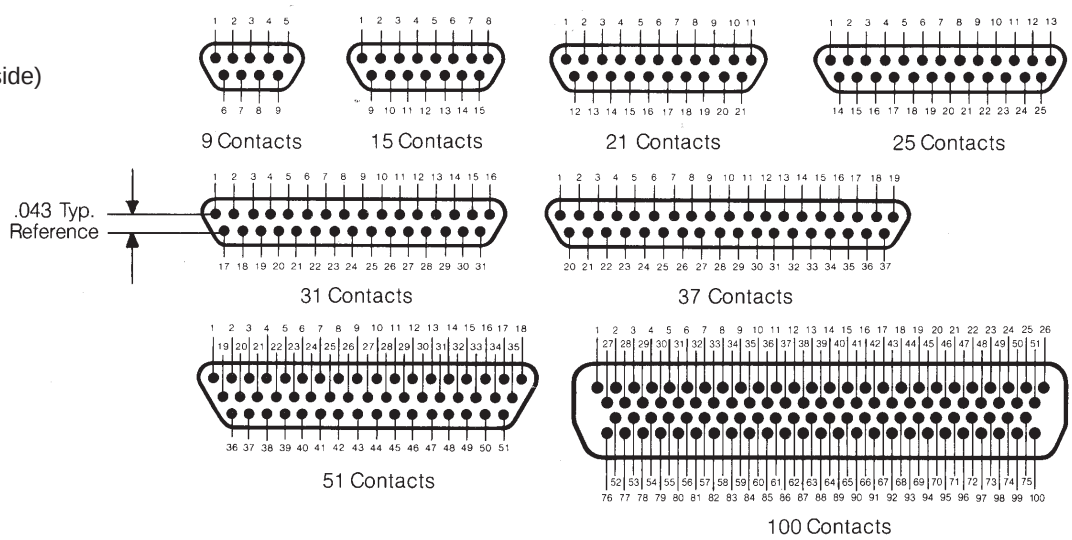

Ordering Information

M83513/10 - C 02 C N

Connector Description
10 = Plug, 9-37 Pos., Narrow Profile, Rt. Angle
11 = Plug, 51 Pos., Narrow Profile, Rt. Angle
12 = Plug, 100 Pos., Narrow Profile, Rt. Angle
13 = Socket, 9-37 Pos., Narrow Profile, Rt. Angle
14 = Socket, 51 Pos., Narrow Profile, Rt. Angle
15 = Socket, 100 Pos., Narrow Profile, Rt. Angle
16 = Plug, 9-37 Pos., Std. Profile, Rt. Angle
17 = Plug, 51 Pos., Std. Profile, Rt. Angle
18 = Plug, 100 Pos., Std. Profile, Rt. Angle
19 = Socket, 9-37 Pos., Std. Profile, Rt. Angle
20 = Socket, 51 Pos., Std. Profile, Rt. Angle
21 = Socket, 100 Pos., Std. Profile, Rt. Angle
22 = Plug, 9-37 Pos., Straight Mount
23 = Plug, 51 Pos., Straight Mount
24 = Plug, 100 Pos., Straight Mount
25 = Socket, 9-37 Pos., Straight Mount
26 = Socket, 51 Pos., Straight Mount
27 = Socket, 100 Pos., Straight Mount

Hardware
N = No Jackpost
P = Jackpost Attached

Shell Finish
C = Cadmium
N = Electroless Nickel

Termination Length
01 = 0.109
02 = 0.140
03 = 0.172

Insert Arrangement Length
(No. of Contacts)
A = 9
B = 15
C = 21
D = 25
E = 31
F = 37
G = 51
H = 100

5

90° Termination
(/16-/21)

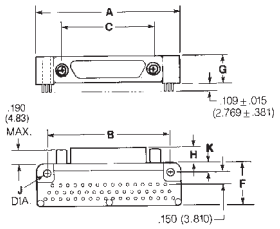

Recommended Board Layout

(As Viewed from Bottom of Terminal Block)

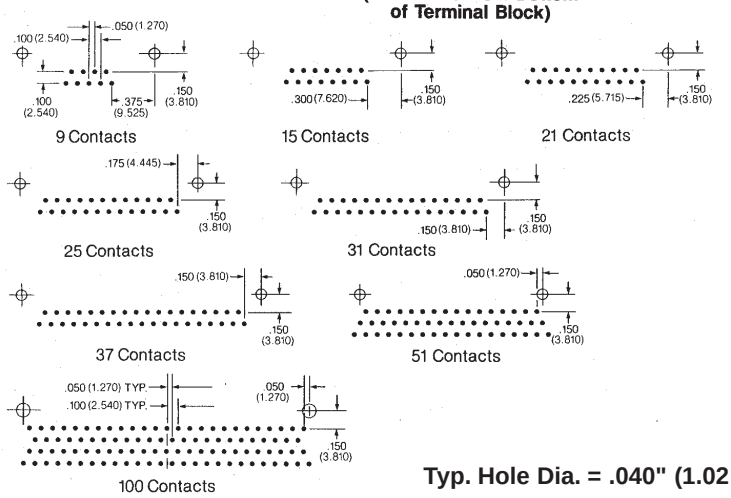

Typ. Hole Dia. = .040" (1.02 mm)

NOTE: For additional connector dimensions, see page 5-22.

No. of Contacts	A Max. in	A Max. mm	B ± .007 (0.18) in	B ± .007 (0.18) mm	C ± .005 (0.13) in	C ± .005 (0.13) mm	F Max. in	F Max. mm
9 Plug	1.390	35.31	1.150	29.21	.565	14.35	.465	11.81
9 Socket	1.390	35.31	1.150	29.21	.565	14.35	.465	11.81
15 Plug	1.540	39.12	1.300	33.02	.715	18.16	.465	11.81
15 Socket	1.540	39.12	1.300	33.02	.715	18.16	.465	11.81
21 Plug	1.690	42.93	1.450	36.83	.865	21.97	.465	11.81
21 Socket	1.690	42.93	1.450	36.83	.865	21.97	.465	11.81
25 Plug	1.790	45.47	1.550	39.37	.965	24.51	.465	11.81
25 Socket	1.790	45.47	1.550	39.37	.965	24.51	.465	11.81
31 Plug	2.040	51.82	1.800	45.72	1.115	28.32	.465	11.81
31 Socket	2.040	51.82	1.800	45.72	1.115	28.32	.465	11.81
37 Plug	2.340	59.44	2.100	53.34	1.265	32.13	.465	11.81
37 Socket	2.340	59.44	2.100	53.34	1.265	32.13	.465	11.81
51 Plug	1.875	47.63	1.600	40.64	1.215	30.86	.565	14.35
51 Socket	1.875	47.63	1.600	40.64	1.215	30.86	.565	14.35
100 Plug	2.780	70.61	2.500	63.50	1.800	45.72	.765	19.43
100 Socket	2.780	70.61	2.500	63.50	1.800	45.72	.765	19.43

No. of Contacts	G Max. in	G Max. mm	H Max. in	H Max. mm	J ± .005 (0.13) in	J ± .005 (0.13) mm	K ± .015 in	K ± .015 mm
9 Plug	.308	7.82	.190	4.83	.096	2.44	.125	3.18
9 Socket	.308	7.82	.200	5.08	.096	2.44	.125	3.18
15 Plug	.308	7.82	.190	4.83	.096	2.44	.125	3.18
15 Socket	.308	7.82	.200	5.08	.096	2.44	.125	3.18
21 Plug	.308	7.82	.190	4.83	.096	2.44	.125	3.18
21 Socket	.308	7.82	.200	5.08	.096	2.44	.125	3.18
25 Plug	.308	7.82	.190	4.83	.096	2.44	.125	3.18
25 Socket	.308	7.82	.200	5.08	.096	2.44	.125	3.18
31 Plug	.308	7.82	.190	4.83	.096	2.44	.125	3.18
31 Socket	.308	7.82	.200	5.08	.096	2.44	.125	3.18
37 Plug	.308	7.82	.190	4.83	.096	2.44	.125	3.18
37 Socket	.308	7.82	.200	5.08	.096	2.44	.125	3.18
51 Plug	.351	8.92	.190	4.83	.096	2.44	.125	3.18
51 Socket	.351	8.92	.200	5.08	.096	2.44	.125	3.18
100 Plug	.394	10.00	.190	4.83	.125	3.18	.225	5.72
100 Socket	.394	10.00	.200	5.08	.125	3.18	.225	5.72

Straight (180°) Termination (/22-/27)

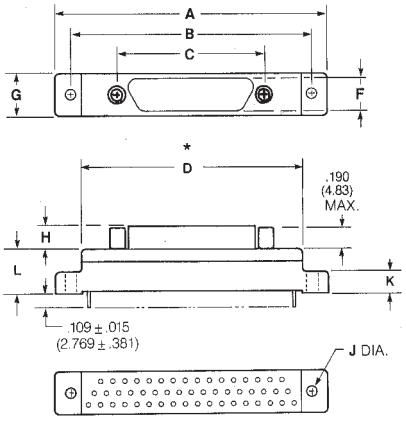

Recommended Board Layout

(As Viewed from Bottom of Terminal Block)

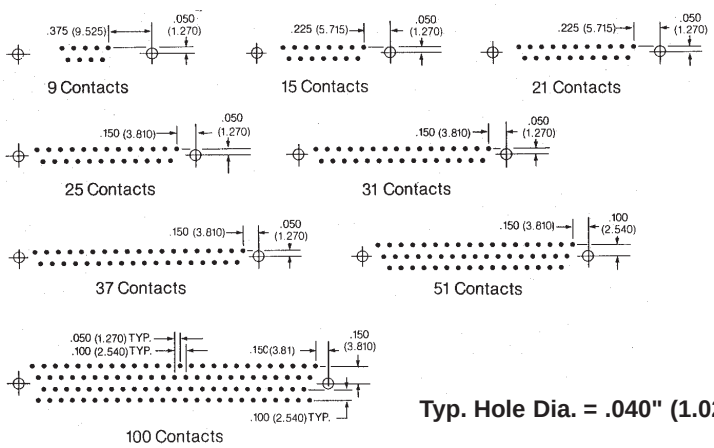

Typ. Hole Dia. = .040" (1.02 mm)

NOTE: For additional connector dimensions, see page 5-22.

No. of	A Max.		B ± .007 (0.18)		C ± .005 (0.13)		D Max.		G Max.	
Contacts	in	mm	in	mm	in	mm	in	mm	in	mm
9 Plug	1.390	35.31	1.150	29.21	.565	14.35	.885	22.48	.308	7.75
9 Socket	1.390	35.31	1.150	29.21	.565	14.35	.885	22.48	.308	7.75
15 Plug	1.390	35.31	1.150	29.21	.715	18.16	.945	24.0	.308	7.75
15 Socket	1.390	35.31	1.150	29.21	.715	18.16	.945	24.0	.308	7.75
21 Plug	1.690	42.93	1.450	36.83	.865	21.97	1.185	30.09	.308	7.75
21 Socket	1.690	42.93	1.450	36.83	.865	21.97	1.185	30.09	.308	7.75
25 Plug	1.740	44.20	1.500	38.10	.965	24.51	1.275	32.38	.308	7.75
25 Socket	1.740	44.20	1.500	38.10	.965	24.51	1.275	32.38	.308	7.75
31 Plug	2.040	51.82	1.800	45.72	1.115	28.32	1.575	40.00	.308	7.75
31 Socket	2.040	51.82	1.800	45.72	1.115	28.32	1.576	40.00	.308	7.75
37 Plug	2.340	59.44	2.100	53.34	1.265	32.13	1.875	47.62	.308	7.75
37 Socket	2.340	59.44	2.100	53.34	1.265	32.13	1.875	47.62	.308	7.75
51 Plug	2.270	57.66	2.000	50.80	1.215	30.86	1.775	45.08	.351	8.92
51 Socket	2.270	57.66	2.000	50.80	1.215	30.86	1.775	45.08	.351	8.92
100 Plug	3.070	77.98	2.800	71.12	1.800	45.72	2.585	65.55	.455	11.56
100 Socket	3.070	77.98	2.800	71.12	1.800	45.72	2.585	65.65	.455	11.56

No. of	H Max.		J ± .005 (0.13)		K Max.		L Max.	
Contacts	in	mm	in	mm	in	mm	in	mm
9 Plug	.190	4.83	.096	2.44	.165	4.19	.355	9.02
9 Socket	.200	5.08	.096	2.44	.165	4.19	.355	9.02
15 Plug	.190	4.83	.096	2.44	.165	4.19	.355	9.02
15 Socket	.200	5.08	.096	2.44	.165	4.19	.355	9.02
21 Plug	.190	4.83	.096	2.44	.165	4.19	.355	9.02
21 Socket	.200	5.08	.096	2.44	.165	4.19	.355	9.02
25 Plug	.190	4.83	.096	2.44	.165	4.19	.355	9.02
25 Socket	.200	5.08	.096	2.44	.165	4.19	.355	9.02
31 Plug	.190	4.83	.096	2.44	.165	4.19	.355	9.02
31 Socket	.200	5.08	.096	2.44	.165	4.19	.355	9.02
37 Plug	.190	4.83	.096	2.44	.165	4.19	.355	9.02
37 Socket	.200	5.08	.096	2.44	.165	4.19	.355	9.02
51 Plug	.190	4.83	.096	2.44	.165	4.19	.355	9.02
51 Socket	.200	5.08	.096	2.44	.165	4.19	.355	9.02
100 Plug	.190	4.83	.125	3.18	.300	7.62	.550	13.97
100 Socket	.200	5.08	.125	3.18	.300	7.62	.550	13.97

90° Narrow Termination (/10-/15)

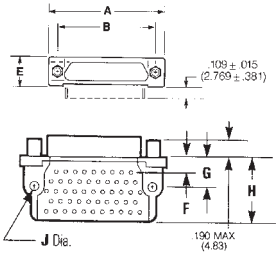

Recommended Board Layout

(As Viewed from Bottom of Terminal Block)

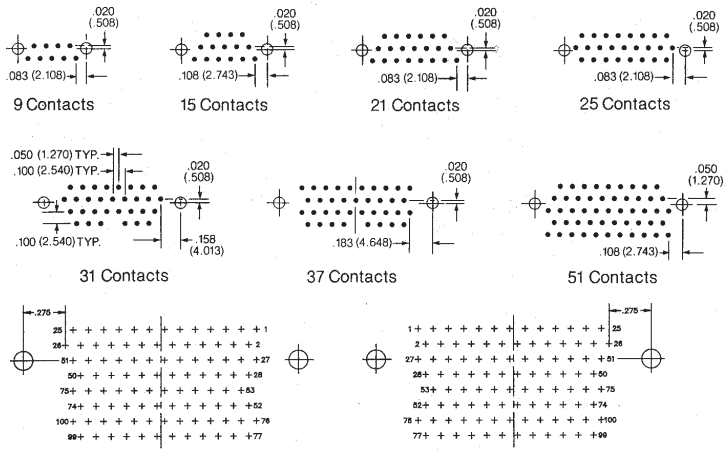

NOTE: For additional connector dimensions, see page 5-22.

Typ. Hole Dia. = .040" (1.02 mm)

No. of Contacts	A Max. in	A Max. mm	B ± .005 (0.13) in	B ± .005 (0.13) mm	C Max. in	C Max. mm
9 Plug	.785	19.94	.565	14.35	.308	7.82
9 Socket	.785	19.94	.565	14.35	.308	7.82
15 Plug	.935	23.75	.715	18.16	.308	7.82
15 Socket	.935	23.75	.715	18.16	.308	7.82
21 Plug	1.085	27.56	.865	21.97	.308	7.82
21 Socket	1.085	27.56	.865	21.97	.308	7.82
25 Plug	1.085	30.10	.965	24.51	.308	7.82
25 Socket	1.185	30.10	.965	24.51	.308	7.82
31 Plug	1.335	33.91	1.115	28.32	.308	7.82
31 Socket	1.335	33.91	1.115	28.32	.308	7.82
37 Plug	1.485	37.72	1.265	32.13	.308	7.82
37 Socket	1.485	37.72	1.265	32.13	.308	7.82
51 Plug	1.435	36.45	1.215	30.86	.351	8.92
51 Socket	1.435	36.45	1.215	30.86	.351	8.92
100 Plug	2.175	55.25	1.800	45.72	.394	10.00
100 Socket	2.175	55.25	1.800	45.72	.394	10.00

No. of Contacts	F ± .010 (0.25) in	F ± .010 (0.25) mm	G ± .010 (0.25) in	G ± .010 (0.25) mm	H Max. in	H Max. mm	J ± .005 (0.13) in	J ± .005 (0.13) mm
9 Plug	.230	5.84	.250	6.35	.420	10.67	.096	2.44
9 Socket	.230	5.84	.250	6.35	.420	10.67	.096	2.44
15 Plug	.130	3.30	.250	6.35	.420	10.67	.096	2.44
15 Socket	.130	3.30	.250	6.35	.420	10.67	.096	2.44
21 Plug	.130	3.30	.250	6.35	.420	10.67	.096	2.44
21 Socket	.130	3.30	.250	6.35	.420	10.67	.096	2.44
25 Plug	.130	3.30	.250	6.35	.420	10.67	.096	2.44
25 Socket	.130	3.30	.250	6.35	.420	10.67	.096	2.44
31 Plug	.130	3.30	.250	6.35	.520	13.21	.996	2.44
31 Socket	.130	3.30	.250	6.35	.520	13.21	.096	2.44
37 Plug	.130	3.30	.250	6.35	.520	13.21	.096	2.44
37 Socket	.130	3.30	.250	6.35	.520	13.21	.096	2.44
51 Plug	.150	3.81	.300	7.62	.650	16.51	.096	2.44
51 Socket	.150	3.81	.300	7.62	.650	16.51	.096	2.44
100 Plug	.200	5.08	.400	10.16	1.000	25.40	.125	3.18
100 Socket	.200	5.08	.400	10.16	1.000	25.40	.125	3.18

Mounting Hardware

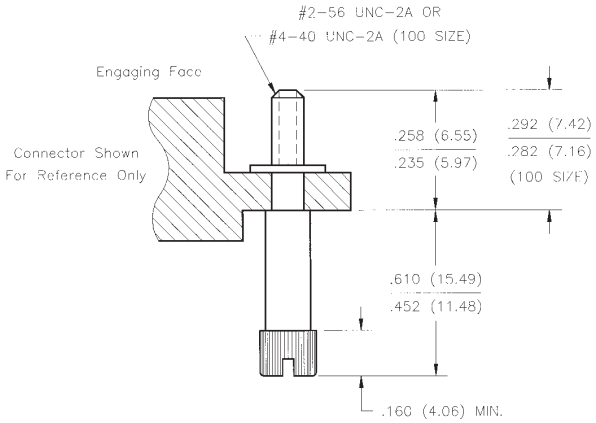

High Profile Jackscrew

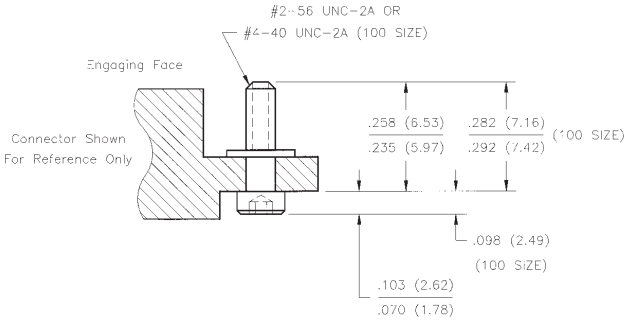

Low Profile Jackscrew

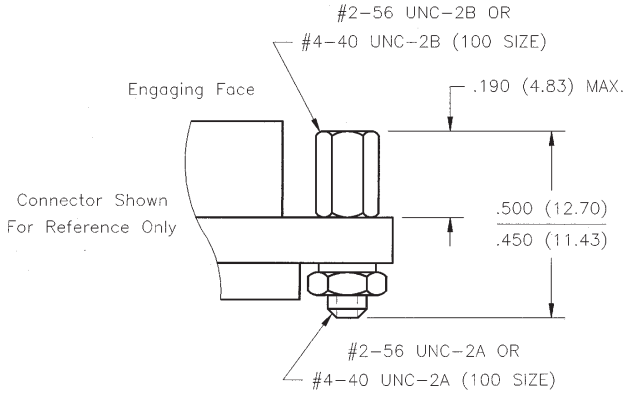

Removable Jackpost

Ordering Information

Type	Style	Screwhead	Thread	Military Part No.
Jackscrew	Low Profile	Recessed Hex	2/56	M83513/5-02
Jackscrew	High Profile	Recessed Hex	2/56	M83513/5-03
Jackscrew	Low Profile	Slotted	2/56	M83513/5-05
Jackscrew	High Profile	Slotted	2/56	M83513/5-06
Jackpost	--	--	2/56	M83513/5-07
Jackscrew	Low Profile	Hex	4/40*	M83513/5-12
Jackscrew	High Profile	Hex	4/40*	M83513/5-13
Jackscrew	Low Profile	Slotted	4/40*	M83513/5-15
Jackscrew	High Profile	Slotted	4/40*	M83513/5-16
Jackpost	--	--	4/40*	M83513/5-17

*100 Size Only

Dura-Con High Reliability All-Plastic & Metal Shell

.050" (1.27mm) Density Connector Saver

Cinch

Features

- ***Designed to significantly reduce damage to already mounted Dura-Con connectors during routine system tests.***
- ***Eliminates numerous mating & unmating cycles experienced by connectors on test harnesses.***
- ***Plug connector on one end, socket connector on the other.***
- ***Available in all-plastic (polyester) or in metal shell with diallyl phthalate or polyester insulators (both UL94V-0 rated).***
- ***Locking hardware must be ordered separately.***

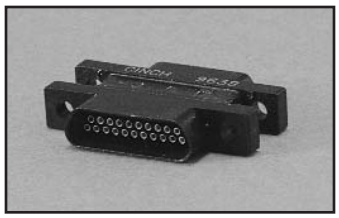

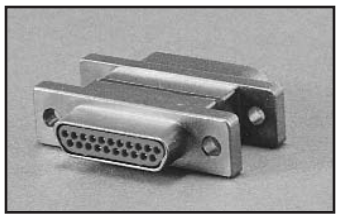

Materials

Insulator: UL94V-0 glass-filled polyester or diallyl phthalate

Contacts: Copper alloy

Contact Plating: .000050 in gold

Shell (Metal Only): Aluminum alloy

Shell Plating: Yellow chromate over cadmium

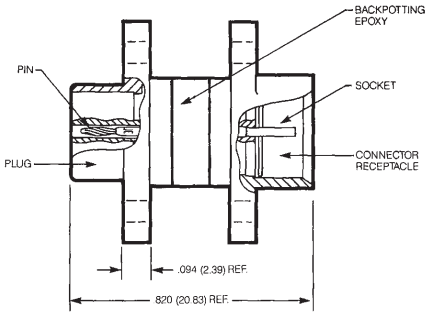

Environmental

Operating Temperature: -55°C to +135°C

Electrical

Current Rating: 3 Amps maximum

Withstanding Voltage: 600 VAC RMS @ sea level

Contact Resistance: 8 milliohms maximum

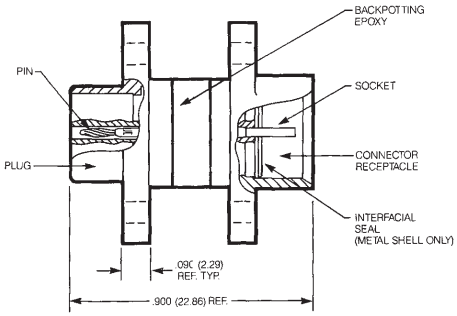

Mechanical

Individual Contact: Insertion force, 6 oz. (170.40 g) maximum; Withdrawal force 0.5 oz. (14.20 g) minimum

Mating / Unmating Forces: See previous tables

	Metal Shell		All Plastic
No. of	Diallyl Phthalate	Glass-Filled Polyester	Glass-Filled Polyester
Contacts	Catalog No.	Catalog No.	Catalog No.
9	DCCM9CS	DCDM9CS	DCDA9CS
15	DCCM15CS	DCDM15CS	DCDA15CS
21	DCCM21CS	DCDM21CS	DCDA21CS
25	DCCM25CS	DCDM25CS	DCDA25CS
31	DCCM31CS	DCDM31CS	DCDA31CS
37	DCCM37CS	DCDM37CS	DCDA37CS
51	DCCM51CS	DCDM51CS	DCDA51CS
100	DCCM100CS	DCDM100CS	–

Dura-Con High Reliability Microedge Connectors

.050" (1.27mm) Density
PC Board Mount
Metal Shell

Cinch

Features

- ***Variety of available PC board mounting styles.***
  - ***"Coke Bottle" for edge mounting on double-sided PCBs***
  - ***Right-angle (90°) mounting for single- or double-sided daughter boards***
  - ***"Claw Foot" leads***
  - ***Gold-plated solid copper wire pigtails***
- ***Harnessing capabilities exist for both plug & socket.***
- ***Standard sizes are 128 and 184 positions.***
- ***Utilizes high-reliability Dura-Con twist pin contact system assuring electrical continuity under extreme shock and vibration.***
- ***Aluminum shells and diallyl phthalate insulators make Dura-Con microedge connectors ideal for airborne or space applications.***
- ***Microedge metal shell connectors meet the requirement of MIL-C-55302.***

Materials

Insulator: UL94V-0 glass-filled polyester or diallyl phthalate per MIL-M-14 (green)
Contacts: Copper alloy
Contact Plating: .000050 in Gold
Shell: Aluminum alloy
Shell Plating: Electroless Nickel

Environmental

Operating Temperature: -55°C to +135°C

Electrical

Current Rating: 3 Amps maximum
Withstanding Voltage: 600 VAC RMS @ sea level, 300 VAC @ 70,000 ft.
Contact Resistance: 8 milliohms maximum

Mechanical

Insertion/Withdrawal Force:

6 oz. (170.40 g[f]) maximum insertion force, per contact;
0.5 oz. (14.20 g[f]) minimum withdrawal force, per contact

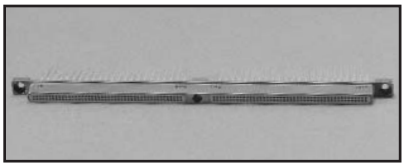

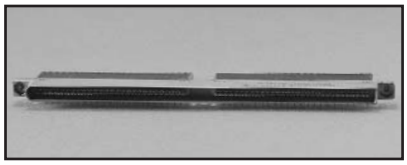

128 Contact Receptacle (Right Angle)

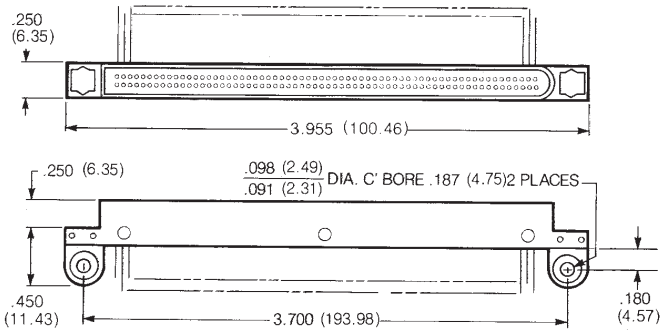

Side View and Termination Grid Pattern

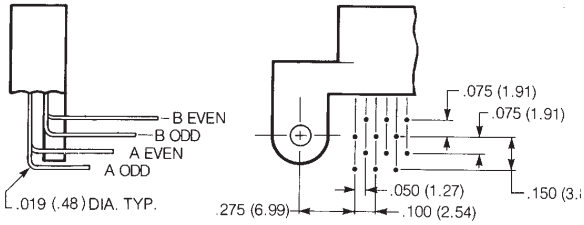

128 Contact Receptacle (Stranded Insulated Wire)

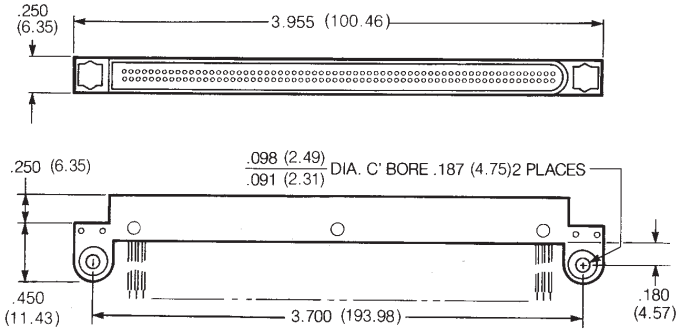

Side View

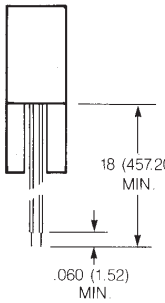

128 Contact Plug (Claw Foot)

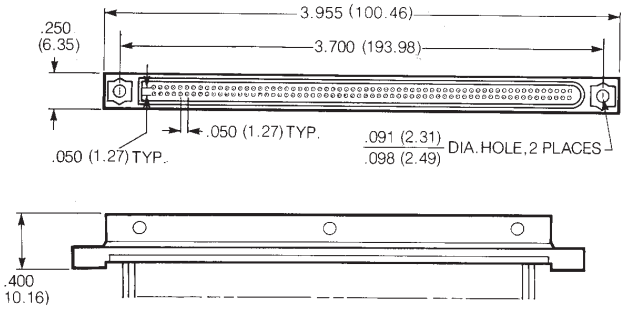

Side View and Termination Grid Pattern

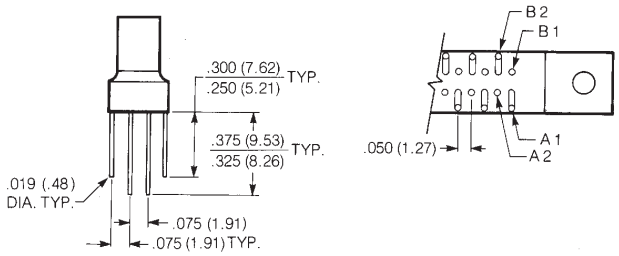

5

128 Contact Plug (Stranded Insulated Wire)

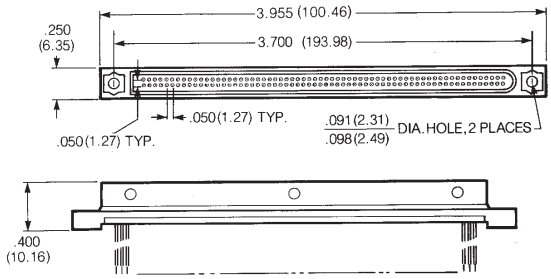

Side View

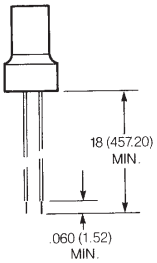

184 Contact Receptacle (Coke Bottle)

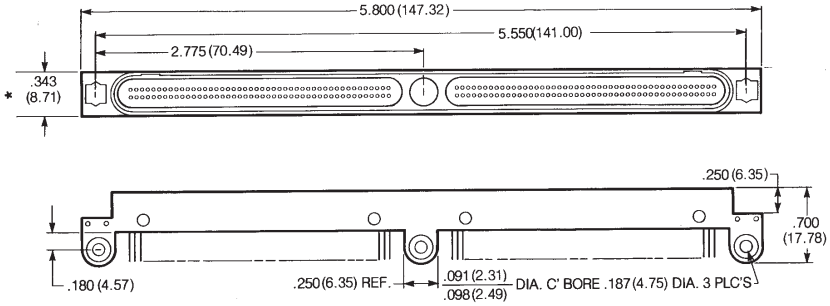

Side View

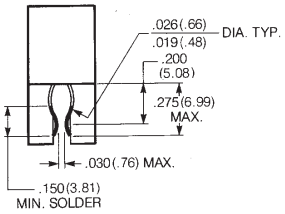

Recommended PCB thickness .047-.062.
Consult factory for other thicknesses.

184 Contact Receptacle (Stranded Insulated Wire)

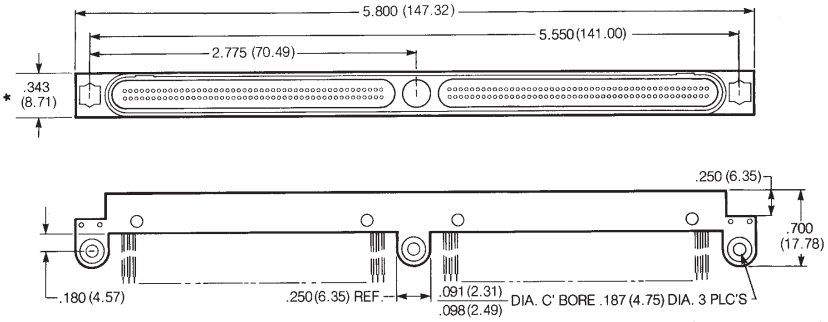

Side View

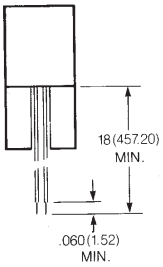

184 Contact Plug (Claw Foot)

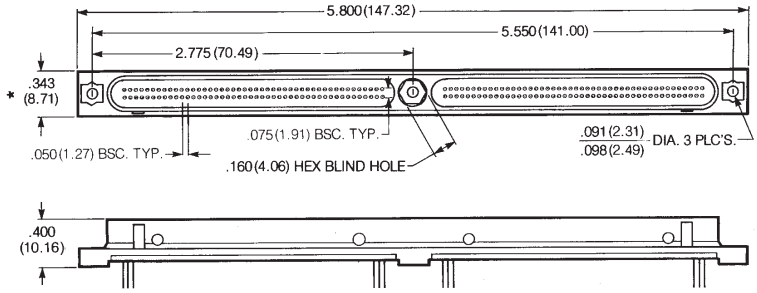

Side View and Termination Grid Pattern

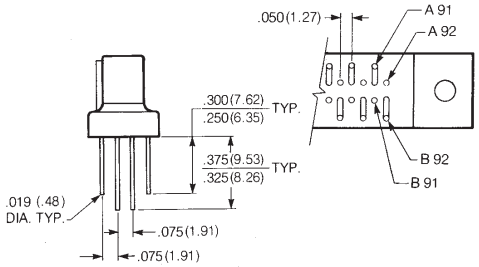

*** Narrow Version (DNEB) .250 Wide**

184 Contact Plug (Standard Insulated Wire)

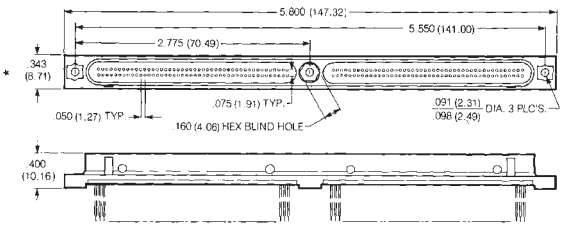

Side View

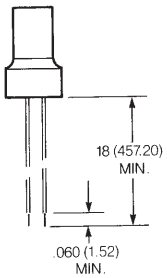

*** Narrow Version (DNEB) .250 Wide**

Shell Polarization Kit

Order No.	"L"	Used On
DNEBP0L1	.250	DNEB Narrow Only
DMEBP0L1	.312	DMEB Std. Width

Key

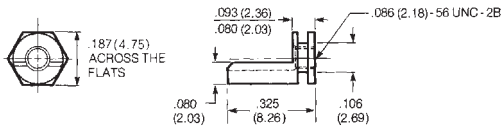

Retaining Pin

Mounting Hardware

Removable Jackscrew/Jackpost Assembly

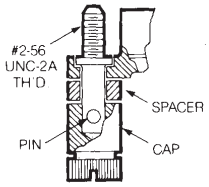

Consult factory if required.

Standard Jackscrew/Jackpost Assembly

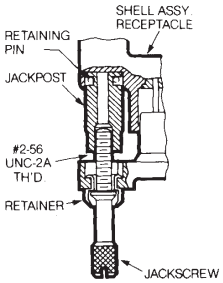

Plug with Jackscrew

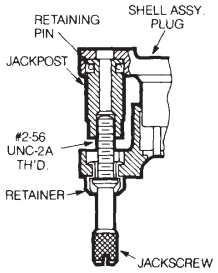

Receptacle with Jackscrew

Ordering Information

DMEB 1-128 P 6 E 2 180

Series Prefix
DMEB = Microedgeboard
DNEB = Microedgeboard, Narrow (184 Only)

Contact Spacing
1 = .050" (1.27mm) centers
128/184
2 = .100" (2.54mm) centers
64/92 (every other contact hole)
For other contact spacing accommodations, consult the factory.

No. of Contacts
128, 184

Contact Type
P = Pin
S = Socket

Wire Size in AWG
5 = 25 AWG Solid Copper
6 = 26 AWG Stranded Wire
S = Solder Cup

Lead Length in Inches

Termination, Color of Finish
1 = White
***2** = Yellow
3 = Tin-Plated
***4** = Gold-Plated (Solid Copper Wire Only)
***5** = Color Coded per MIL-Std. 681, System 1

Wire Type/Termination Style
C = Solid Copper
E = MIL-W-16878/4, 7 Strand
BS = PC Board (Coke Bottle)
BRA = PC Board Right-Angle (Formed to "A" Side)
BRB = PC Board Right-Angle (Formed to "B" Side)
W = PC Board (Claw Foot)

*Indicates Cinch std Option

5

Dura-Con High Reliability Strip Connectors

.050" (1.27mm) Density
Solder Cup/Wire
All-Plastic

Cinch

Features

- ***Lightweight.***
- ***Slim Profile.***
- ***High-Density Interconnect.***
- ***High-reliability Dura-Con twist pin contact system for extreme shock & vibration applications.***
- ***Optional polarization with guide pins to prevent mismating connectors.***
- ***Plug & socket available in sizes from 1 to 60 positions.***

Materials

Insulator: UL94V-0 glass-filled polyester
Contacts: Copper alloy
Contact Plating: .000050 in gold

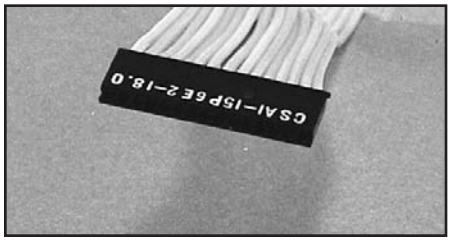

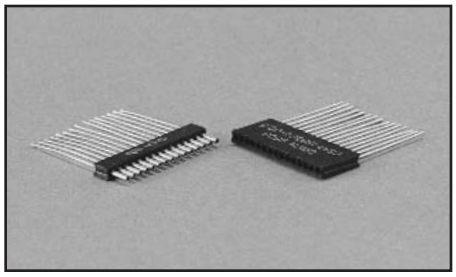

Environmental

Operating Temperature: -55°C to +135°C

Electrical

Current Rating:	3 Amps maximum
Withstanding Voltage:	600 VAC @ sea level; 150 VAC @ 70,000 ft.
Contact Resistance:	8 milliohms maximum

Mechanical

Insertion & Withdrawal Force (Per Contact):

6 oz. (170.40 g[f]) maximum insertion;
0.5 oz. (14.20 g[f]) minimum withdrawal

Dura-Con High Reliability Strip Connectors

.050" (1.27mm) Density
Solder Cup/Wire
All Plastic

Cinch

Dimensions

Socket Connector

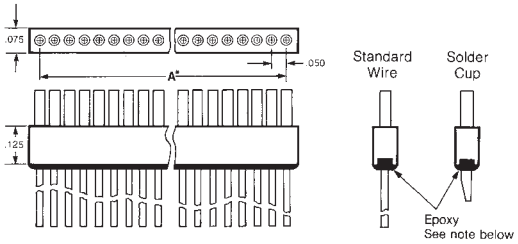

Pin Connector

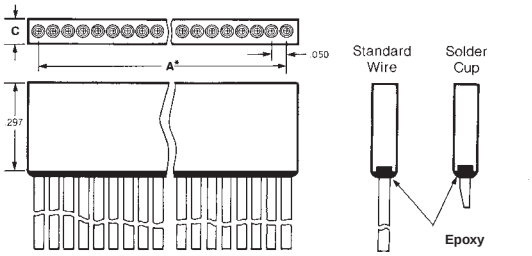

24 Gauge Stainless Steel Guide Pin*

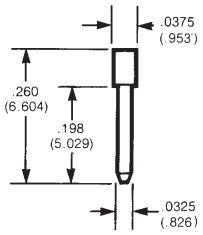

NOTE: Dimension A is number of positions less 1 multiplied by .050

* Assembly in socket connector only.

Ordering Information

CS A 1 10 P 4 C 4-00.5 G

Cinch Dura-Con Strip
Thermoplastic
Glass-Reinforced
Strip Connector

Contact Centers
A = .050 (24 Ga.)

Contact Position
1 = Contacts in every position

No. of Contact Positions
1 through 60**

Contact Type
P = Pin
S = Socket

Wire Size in AWG
5 = 25 AWG Solid Copper Wire
6 = 26 AWG Stranded Wire
S = Solder Cup (Skip to guide pin field if necessary)

Guide Pin (Socket Only)
Empty Cavity (Pin Only)
G02 = Guide Pin Position No. 2
GX = Special Position, Consult Factory

Lead Length in inches
00.5 Solid copper wire only
01.0 Solid copper wire only
02.0 Solid copper wire only
18.0 Stranded wire only
24.0 Stranded wire only
36.0 Stranded wire only
48.0 Stranded wire only

Insulation Color, Solid Wire Finish, Solid Cup Finish
1 = All White
***2** = All Yellow
3 = Tin-Plated
***4** = Gold-Plated (Solid Wire Only)
***5** = Color Coded Per MIL-Std. 681, System 1
System 1. (Stranded Wire Only)

Insulation Wire or Solid Wire Type
C = Solid Copper
E = MIL-W-168 78/4, 7 Strand

* - Indicates Cinch std. option.
** - Consult factory for larger sizes and multi-row.

Call Toll Free: 1 (800) 323-9612

MINIATURE RIBBONS

IDC SUPERIBBON™ & Metal Shell

Vertical Mount Compliant Pin

Solder Cup

Right-Angle Solder Tail

Wire Wrap

Vertical Mount Solder Tail

Accessories & Application Tooling

Cinch

The Miniature Ribbon connector has been a mainstay in the electronics industry for decades. First widely used in telecommunications, it has proven itself to be a very reliable interconnection system, with generous wiping action, high contact pressure, large mating surface area in a relatively compact format, and polarized shells to ensure proper orientation in mating.

The Miniature Ribbon connector gets its name from the ribbon-like shape of the mating end of the contact. It is a derivative of the first connector design to incorporate this type of interconnection where mating members are equally flexible. Each contact is backed up by its respective insulator, resulting in high contact pressure without concern over relaxation that can occur with a beam or cantilever design. Industry standard sizes for this product are 14, 24, 36, 50, and 64 positions. Cinch adheres to industry-standard contact numbering and mating geometry.

Cinch has led the way in making the Miniature Ribbon connector one of the most cost-effective yet high-quality connector systems in the industry. From its roots in the telecommunications industry where it is traditionally known as the "Key Telephone" style connector (USOC Type RJ21), Cinch's innovations in termination, latching, and accessories have helped make the Miniature Ribbon family the choice for applications in computers and instrumentation as well. It is called out as the standard connector for a parallel printer interface (IEEE 1284-B, also known as "Centronics"), multi-purpose peripheral interface (SCSI-1), and instrumentation interface (IEEE-488, also know as "GPIB").

Cinch manufactures one of the most diverse lines of Miniature Ribbon products in the industry. From SUPERIBBON™ all-plastic products with solderless termination to full-metal shell products with solder terminations, and even filtered versions designed to solve EMI problems, Cinch can provide the Miniature Ribbon products you need.

Several options are available so you can find the right Cinch Miniature Ribbon product for your application. Cinch's method of integrating features into the product often *reduces overall installed cost compared to other alternatives.* Select the termination type, the configuration, the latching and mounting methods to be used, and any accessories that would make the installation of the connector complete.

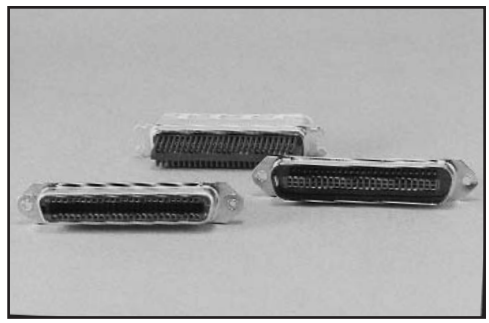

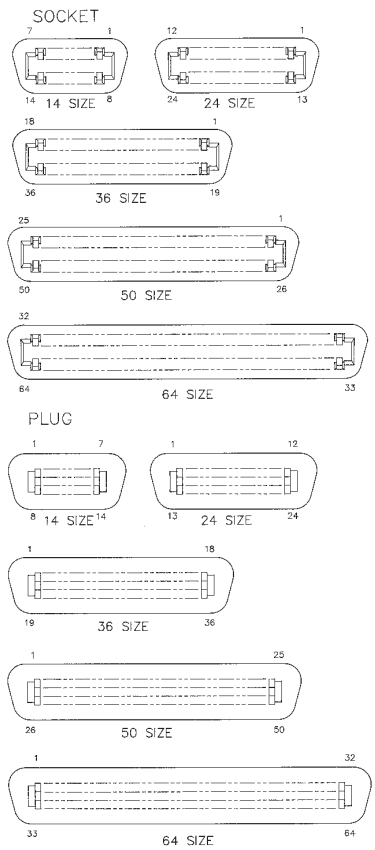

Connector Face Views

All-Plastic	Metal Shell	
6-6	6-14	IDC
	6-24	Solder Cup
6-30	6-30	Wire Wrap
6-38	6-34	Vertical-Mount Solder Tail
6-42	6-42	Vertical-Mount Compliant Pin
	6-46	Right Angle Solder Tail
6-48		Filtered Vertical-Mount Solder-Tail
6-48		Male/Female Adapter

Accessories information starts on page 6-51.
Tooling Information starts on pafe 6-54.

SUPERIBBON is a trademark of Cinch Connectors, Inc.Systems, Inc.

Termination Options

Cinch offers products suitable for termination by various methods:

- IDC -- Cinch's patented Insulation Displacement Contact (IDC) provides reliable, low-cost termination to discrete wire, either loose or in jacketed cable. With the use of special tools designed for field and/or factory use, wires can be terminated to the connector without individual cutting, stripping, or soldering. Reliable performance is ensured by the exclusive 4-point contact termination, and the built-in wire strain relief prevents mechanical stress from reaching the termination points.

  Cinch IDC connectors are available in both Metal Shell and All-Plastic SUPERIBBON versions. They are available to terminate solid conductor (some 22 AWG, and 24-26 AWG) or stranded (24-28 AWG) wire. Likewise, a full range of termination tooling is available.

- Wire Wrap -- This termination style, which is also solderless, is often used when termination must be done in place, such as in wired backplanes, etc. Cinch wire-wrap terminated Miniature Ribbon connectors are available in both Metal Shell and All-Plastic versions, with either .025" or .045" sq. tails.

- Solder Cup -- For those applications where nothing but the lowest termination resistance will do, Cinch offers Metal Shell Miniature Ribbon connectors with solder-cup termination. Available with or without insulator barriers between contact terminal areas, these products will accept up to one 22 AWG solid wire or one 24 AWG stranded wire per contact.

- Solder Tail -- This style allows Cinch Miniature Ribbon connectors to be through-hole soldered directly to a printed circuit board. They are available in Vertical Mount and Right-Angle Mount versions.

- Compliant Pin -- This style allows termination to a printed circuit board without soldering. This eliminates the costly cleaning/rework associated with soldering, yet the Cinch modified-C type termination will not damage the board's plating as standard press-fit terminals can.

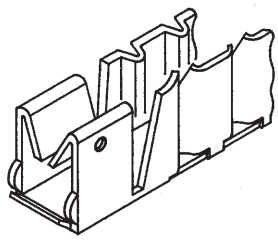

Termination section of IDC contact

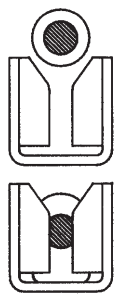

Piercing/compressing action as wire is pressed into contact

Configuration

Cinch Miniature Ribbon and SUPERIBBON products are available as connectors alone to be mounted to a system's panel or printed circuit board, or complete with hoods for use on various types of cable assemblies. Hooded products are available with cable exits straight back 180 degrees from the mating face (Top-Entry) or with cable exits on either end, 90, or 270 degrees from the mating face (Standard and Reverse Orientation End-Entry). Finally, overmold kits are available allowing you to efficiently and economically manufacture your own "custom" cable assemblies.

End-Entry SuperShield™ connectors and All-Plastic SUPERIBBON connectors feature an integral cable clamp that prevents stress on the termination area, even when the hood is removed during assembly or repair.

Top-Entry products have cable clamps built into the hoods. These clamps are adjustable to fit a range of cable sizes.

SuperShield is a trademark of Cinch Connectors , Inc.

Latching Options

Miniature Ribbon and SUPERIBBON products exhibit a degree of self-locking inherent in the contact design; however, additional locking means are recommended to prevent connectors from being unmated inadvertently. Choices include:

- Screwlock Hardware -- the simplest connectors require the use of separate threaded hardware to lock mating connectors together. Some Cinch Miniature Ribbon cable connectors include locking screws; hardware for other configurations may be found in the Accessories section of the Miniature Ribbon line.

  Some panel-mount products are available with fixed female (internal thread) screwlocks that provide an integral threaded screwlock as part of the connector.

- Bail Latches -- as an alternative to screwlock hardware, Cinch offers many configurations with industry-standard bail latches. These connectors have wire clips on each end of the socket, and mating plugs have notched ends that these clips snap into.

  Bail latches offer the advantage of operating without any tools. Because of this, they have been standardized into several applications, including “Centronics” 36-position parallel printer interface and SCSI-1 peripheral interface bus.

  Bail latch sockets include standard “straight” latches, suitable for top entry configurations. Special latches can be ordered to replace one standard latch to fit under the cable on end entry mating plug assemblies.

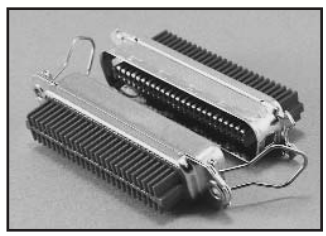

- InstaLatch™ -- all Cinch SUPERIBBON all-plastic sockets and some metal shell Miniature Ribbon sockets are available with a Cinch-patented latching system called InstaLatch. In this passive latching system, spring clips at each end of the socket automatically lock into windows in the shell of the mating plug securing the two connectors together. Audible feedback confirms that the connectors are indeed locked.

  InstaLatches may be unlocked by depressing the latch at either end of the connector, using almost any small, pointed-end tool. A special tool is also available to unlatch InstaLatches when connectors are laid out in a tight arrangement.

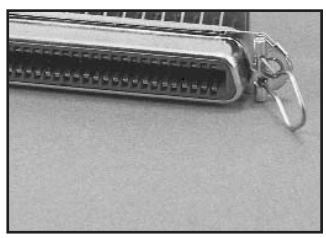

- J-Hooks -- These devices, available on selected Miniature Ribbon products, automatically lock onto the nose and hood of mating end entry connectors. They are easily unlatched without special tools and are more accessible than other latches in certain applications.

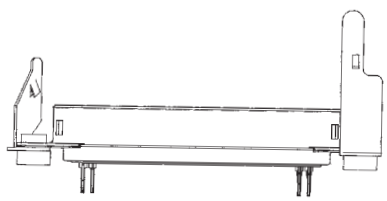

InstaLatch is a trademark of Cinch Connectors, Inc.

Mounting Options

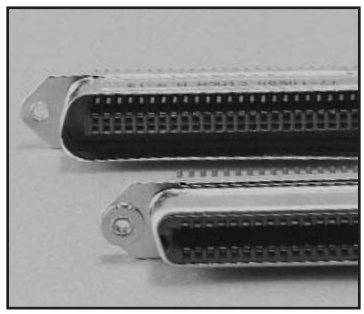

Various mounting options are available with Cinch Miniature Ribbon and SUPERIBBON products:

- Through-Hole/Threaded Hole -- These products require separate hardware to mount the connector to a panel or other component. Versions are available to accommodate #3, #4, and in some cases, through #8 hardware.

  Standard size cutouts are adequate for mounting panel-mount connectors to system panels with this type of hardware. They may be front- or rear-mounted. (Sockets with bail latches, however, must be front-mounted unless a modified cutout is used to clear the latch retaining hardware.)

  Metal Shell PC Mount products are available in some versions with standoffs to the printed circuit board. These may be conductive or insulated.

Standard Panel Cutout Recommendations

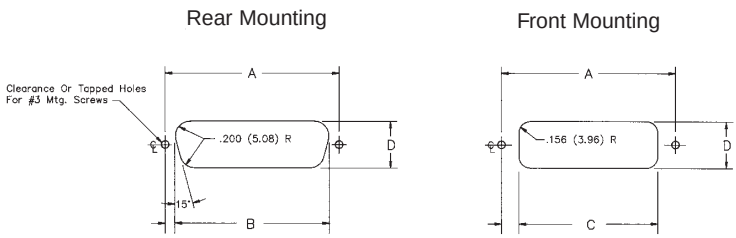

MOUNTING LAYOUTS

Dimensions

	Plug or Fixed-Mount Socket				Float-Mount Socket			
Size	**A**	**B**	**C**	**D**	**A**	**B**	**C**	**D**
14	1.417 (35.99)	1.098 (27.89)	.940 (23.88)	.580 (14.73)	1.417 (35.99)	1.153 (29.29)	.995 (25.27)	.635 (16.13)
24	1.842 (46.79)	1.523 (38.68)	1.365 (34.67)	.580 (14.73)	1.842 (46.79)	1.578 (40.08)	1.420 (36.07)	.635 (16.13)
36	2.352 (59.74)	2.033 (51.64)	1.875 (47.63)	.580 (14.73)	2.352 (59.74)	2.088 (53.04)	1.930 (49.02)	.635 (16.13)
50	2.947 (74.85)	2.628 (66.75)	2.472 (62.79)	.580 (14.73)	2.947 (74.85)	2.683 (68.15)	2.525 (64.14)	.635 (16.13)

SUPERIBBON, Plug or Socket

Size	A	B	C	D
14	1.417 (35.99)	1.172 (29.77)	.787 (19.99)	.610 (15.49)
24	1.842 (46.79)	1.597 (40.56)	1.212 (30.78)	.610 (15.49)
36	2.352 (59.74)	2.107 (53.52)	1.722 (43.74)	.610 (15.49)
50	2.947 (74.85)	2.703 (68.66)	2.317 (58.85)	.610 (15.49)
64	3.592 (91.24)	3.298 (83.77)	2.912 (73.96)	.610 (15.49)

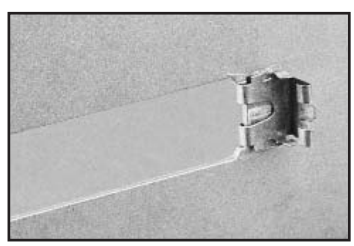

- Panel Clips -- These devices are add-on accessories for All-Plastic products and are available as optional configurations on certain Metal Shell products. They allow you to mount the connector to the system panel without screws, nuts, or spacers, and leave the connector's mounting holes free for use in latching, if so desired.

- Boardlocks -- These devices, found on certain solder-tail PC mount products, fasten the connector to the printed circuit board with solder as part of the wave soldering process. Thus, there is no additional labor required to complete the assembly, and a cost savings can often be realized.

Features

- ***Patented contact terminates Discrete Wire (loose or jacketed cable) without stripping or soldering solid- and stranded-wire versions available.***
- ***All-plastic design reduces cost.***
- ***Available in plug and socket styles in 14, 24, 36, 50, and 64 position sizes.***
- ***Includes InstaLatch passive latch feature for automatic latching. Sockets are also available without latches.***
- ***Available with .125" or #4-40 mounting holes. 50-position size plug also available to lock with industry-standard Bail Latches.***
- ***Designed for panel mount, 180° (Top-Entry), or 90° (Standard) / 270° (Reverse) End-Entry cable application.***
- ***Integral Cable Clamp on End-Entry versions provides superior strain relief, even with hood removed.***
- ***Full range of application tooling is available for termination, unlatching, etc. See page 6-54 for details.***
- ***UL Recognized - Files E170218 (UL1977), E130965 (UL1863).***
- ***CSA Approved - File LR31996-7.***

Materials

Insulator: Gray UL94V-0 rated glass-filled polyester, except where noted

Contact: Copper alloy

Contact Plating: select gold over 50µin. select nickel standard; 30µin. select gold over 50µin. select nickel available where indicated

Environmental

Operating Temperature: -40°C to +105°C

Shock: 50G Peak, per EIA Std. RS364, TP27, Condition A

Vibration: 3 cycles @ 10-55Hz in each of 3 axes per EIA Std. 364, TP28, Condition A

Moisture Resistance: Per EIA Std. RS364, TP31, Condition B, with Step 7B excluded

Electrical

Voltage Rating: 500 VAC @ sea level; 125 VAC @ 70,000 ft.

Withstanding Voltage: 1200 VAC RMS @ sea level, per EIA Std. RS364, TP20

Contact Rating: 5 Amps (4 Amps per CSA)

Contact Resistance: 6 milliohms maximum, per EIA Std. RS364, TP6

Contact Resistance Change During Life Conditioning:

Wire Size	Resistance Change (milliohms, max.)
24 AWG Solid	0.5
26 AWG Solid	0.5
26 AWG Stranded	2.0
28 AWG Stranded	5.0

Insulation Resistance: 5000 Megohms minimum initial; 1000 Megohms minimum after moisture

Mechanical Characteristics

Durability: 200 mating/unmating cycles

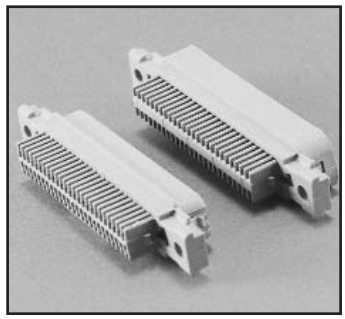

Mating / Unmating Forces:

	Mating Force (max.) with InstaLatches		Unmating Force (min.) without InstaLatches	
Size	**Lb.**	**Kg**	**Lb.**	**Kg**
14	12	5.44	2	0.91
24	17	7.71	4	1.81
36	23	10.43	6	2.72
50	32	14.52	7	3.18
64	37	16.78	8	3.63

Termination: Solid IDC versions terminate 22 AWG - 26 AWG solid wire;
Stranded IDC versions terminate 24 AWG - 28 AWG stranded wire;
Recommended Wire Insulation: soft PVC, .040" (1.02mm) max. OD

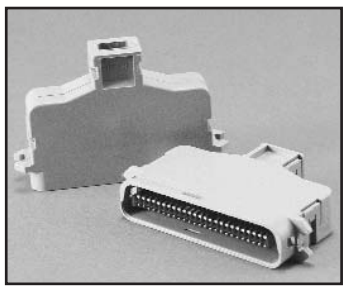

Wire Grip Strength (using recommended wire type):

	Minimum Force	
Wire Size	**Lb.**	**Kg**
24 AWG Solid	7	3.42
26 AWG Solid	5	2.44
26 AWG Stranded	5	2.44

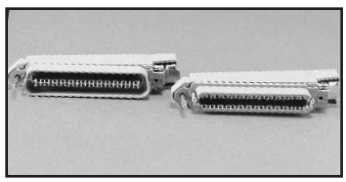

Panel Mount

Panel mount connectors provide signal I/O from a panel or system cabinet.

See pages 6-51 thru 6-53 for accessories such as wire restraints, panel clips, mounting screws, and dust covers that make the use of Cinch SUPERIBBON connectors even more cost-effective in panel-mount applications.

Dimensions

	A		B		D	
Size	in	mm	in	mm	in	mm
14	1.745	44.32	1.417	35.99	0.738	18.75
24	2.170	55.12	1.842	46.79	1.163	29.54
36	2.680	68.07	2.352	59.74	1.673	42.49
50	3.275	83.19	2.947	74.85	2.268	57.61
64	3.875	98.43	3.542	89.97	2.863	72.72

Plug

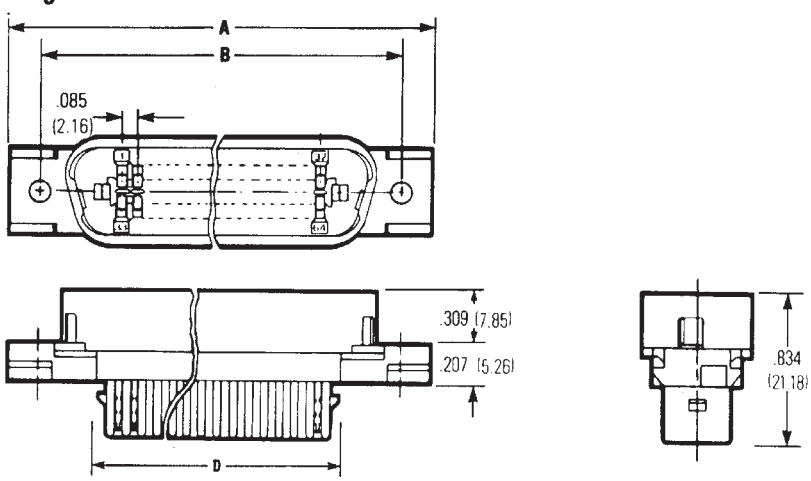

Socket

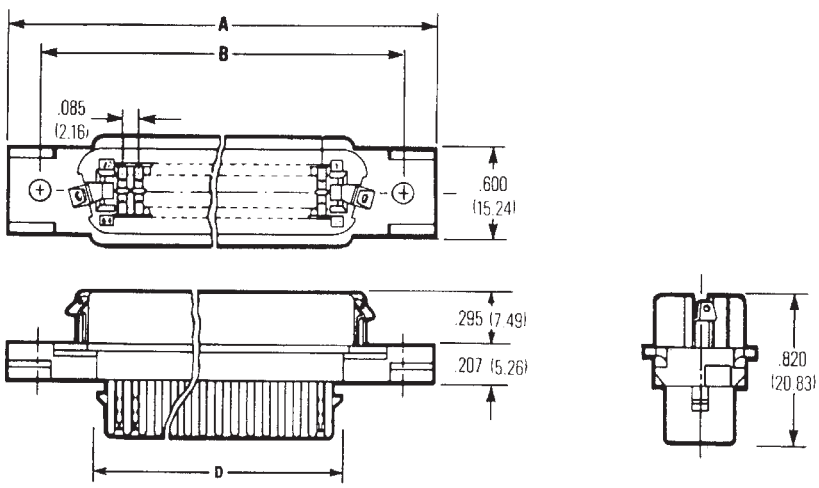

Ordering Information, Panel Mount

Plug, InstaLatching

Mount	Size	Solid Wire Commercial	Solid Wire 30Au/Ni
.125 Hole	14	97-12140-11	97-12140-11A
	24	97-12240-11	97-12240-11A
	36	97-12360-11	97-12360-11A
	50	97-12500-11	97-12500-11A
	64	97-12640-11	97-12640-11A
#4-40 Hole	14	97-12140-01	97-12140-01A
	24	97-12240-01	97-12240-01A
	36	97-12360-01	97-12360-01A
	50	97-12500-01	97-12500-01A
	64	97-12640-01	97-12640-01A

Socket

Latch	Mount	Size	Solid Wire Commercial	Solid Wire 30Au/Ni
InstaLatches	.125 Hole	14	97-22140-11	97-22140-11A
		24	97-22240-11	97-22240-11A
		36	97-22360-11	97-22360-11A
		50	97-22500-11	97-22500-11A
		64	97-22640-11	97-22640-11A
	#4-40 Hole	14	97-22140-01	97-22140-01A
		24	97-22240-01	97-22240-01A
		36	97-22360-01	97-22360-01A
		50	97-22500-01	97-22500-01A
		64	97-22640-01	97-22640-01A
No Latches	.125 Hole	14	97-22140-12	97-22140-12A
		24	97-22240-12	97-22240-12A
		36	97-22360-12	97-22360-12A
		50	97-22500-12	97-22500-12A
		64	97-22640-12	97-22640-12A
	#4-40 Hole	14	97-22140-02	97-22140-02A
		24	97-22240-02	97-22240-02A
		36	97-22360-02	97-22360-02A
		50	97-22500-02	97-22500-02A
		64	97-22640-02	97-22640-02A

180° (Top-Entry) Cable

Snap-on plastic top-entry hoods are available separately to provide strain relief to a cable when one of the mounting/ latching options from page 6-9 fits your requirements. See page 6-53 for details and ordering information for top-entry all-plastic hoods.

For bail latching applications, a 50-position size top-entry plug is available. It locks with industry-standard bail latches for positive locking/unlocking without tools. It also locks with InstaLatch latches for passive automatic latching.

For these products, insulator material is blue UL94V-0 rated glass-filled polyester, and hood material is gray UL94V-0 rated glass-filled polyester.

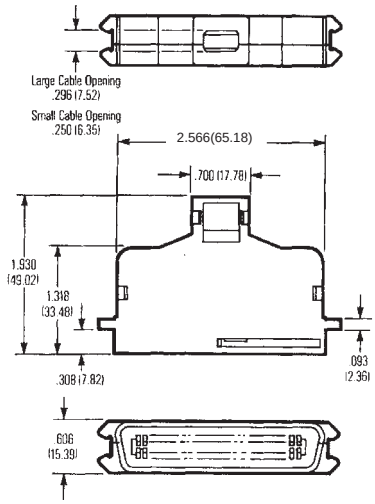

Ordering Information, 180° (Top-Entry) Cable Bail Latching Plug

	Solid Wire			
	Large (.296") Cable Opening		Small (.250") Cable Opening	
Size	**Commercial**	**30Au/Ni**	**Commercial**	**30Au/Ni**
50	77-32500LP	77-32500LPA	77-32500SP	77-32500SPA

90° (Standard) / 270° (Reverse) End-Entry Cable

End-Entry connectors include a hood and integral cable clamp for cable exit from the end
of the connector.

- The standard-orientation plug has the cable clamp on the position-1 end, and the standard-orientation socket has the clamp on the high position end.
- Cables may be extended end-to-end (i.e., “running cable”) by mating standard-orientation plugs and sockets, or “doubled back” by mating a standard-orientation connector with a reverse-orientation mate.
- Cables may exit either direction on a cable-to-panel application by choosing standard or reverse-orientation, depending on the desired direction of cable exit.
- Pointed-nose versions of the standard-orientation, 50-position size are slightly smaller than the square-end product and are suited to applications with limited space such as bridging adapters, etc.
- #4-40 versions include screws that are 3/4" long, suitable for locking directly to the body of another connector. For locking to connectors panel-mounted with screwlock hardware, shorter screws are required. See pages 6-51 thru 6-53 for these and other accessories, such as dust covers.

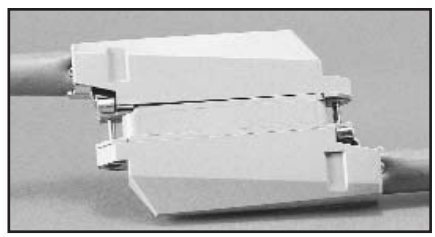

Running Cable Application

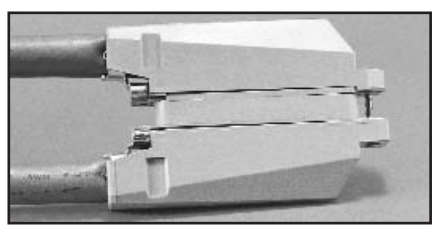

Doubled-Back Cable Application

Dimensions, Square End

	A		B	
Size	in	mm	in	mm
14	2.114	53.70	1.417	35.99
24	2.539	64.49	1.842	46.79
36	3.049	77.44	2.352	59.74
50	3.677	93.40	2.947	74.85
64	4.511	114.58	3.542	89.97

Plug

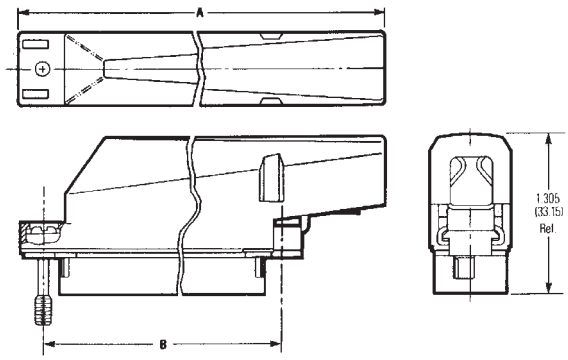

Socket

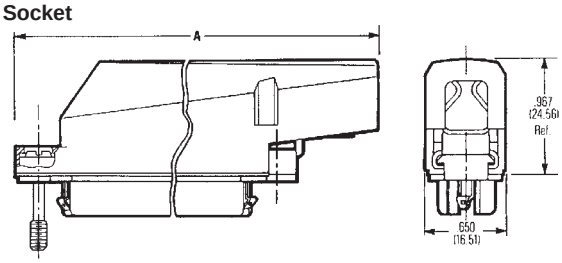

Ordering Information, Square End

Standard (90°) Orientation

Plug, InstaLatching

Mount	Size	Solid Wire Commercial	Solid Wire 30Au/Ni
.125 Hole	14	97-12140-90	97-12140-90A
	24	97-12240-90	97-12240-90A
	36	97-12360-90	97-12360-90A
	50	97-12500-90	97-12500-90A
	64	97-12640-90	97-12640-90A
#4-40 Hole with Screw	14	97-12140-91	97-12140-91A
	24	97-12240-91	97-12240-91A
	36	97-12360-91	97-12360-91A
	50	97-12500-91	97-12500-91A
	64	97-12640-91	97-12640-91A

Socket

Latch	Mount	Size	Solid Wire Commercial	Solid Wire 30Au/Ni
InstaLatches	.125 Hole	14	97-22140-90	97-22140-90A
		24	97-22240-90	97-22240-90A
		36	97-22360-90	97-22360-90A
		50	97-22500-90	97-22500-90A
		64	97-22640-90	97-22640-90A
	#4-40 Hole with Screw	14	97-22140-91	97-22140-91A
		24	97-22240-91	97-22240-91A
		36	97-22360-91	97-22360-91A
		50	97-22500-91	97-22500-91A
		64	97-22640-91	97-22640-91A
No Latches	.125 Hole	14	97-22140-92	97-22140-92A
		24	97-22240-92	97-22240-92A
		36	97-22360-92	97-22360-92A
		50	97-22500-92	97-22500-92A
		64	97-22640-92	97-22640-92A
	#4-40 Hole with Screw	14	97-22140-93	97-22140-93A
		24	97-22240-93	97-22240-93A
		36	97-22360-93	97-22360-93A
		50	97-22500-93	97-22500-93A
		64	97-22640-93	97-22640-93A

Ordering Information, Square End (Cont'd)

Reverse (270°) Orientation

Plug, InstaLatching

Mount	Size	Solid Wire Commercial	Solid Wire 30Au/Ni
.125 Hole	14	97-12140-270	97-12140-270A
	24	97-12240-270	97-12240-270A
	36	97-12360-270	97-12360-270A
	50	97-12500-270	97-12500-270A
	64	97-12640-270	97-12640-270A
#4-40 Hole with Screw	14	97-12140-271	97-12140-271A
	24	97-12240-271	97-12240-271A
	36	97-12360-271	97-12360-271A
	50	97-12500-271	97-12500-271A
	64	97-12640-271	97-12640-271A

Socket

Latch	Mount	Size	Solid Wire Commercial	Solid Wire 30Au/Ni
InstaLatches	.125 Hole	14	97-22140-270	97-22140-270A
		24	97-22240-270	97-22240-270A
		36	97-22360-270	97-22360-270A
		50	97-22500-270	97-22500-270A
		64	97-22640-270	97-22640-270A
	#4-40 Hole with Screw	14	97-22140-271	97-22140-271A
		24	97-22240-271	97-22240-271A
		36	97-22360-271	97-22360-271A
		50	97-22500-271	97-22500-271A
		64	97-22640-271	97-22640-271A
No Latches	.125 Hole	14	97-22140-272	97-22140-272A
		24	97-22240-272	97-22240-272A
		36	97-22360-272	97-22360-272A
		50	97-22500-272	97-22500-272A
		64	97-22640-272	97-22640-272A
	#4-40 Hole with Screw	14	97-22140-273	97-22140-273A
		24	97-22240-273	97-22240-273A
		36	97-22360-273	97-22360-273A
		50	97-22500-273	97-22500-273A
		64	97-22640-273	97-22640-273A

Pointed-End 50-Position 90° End-Entry Cable

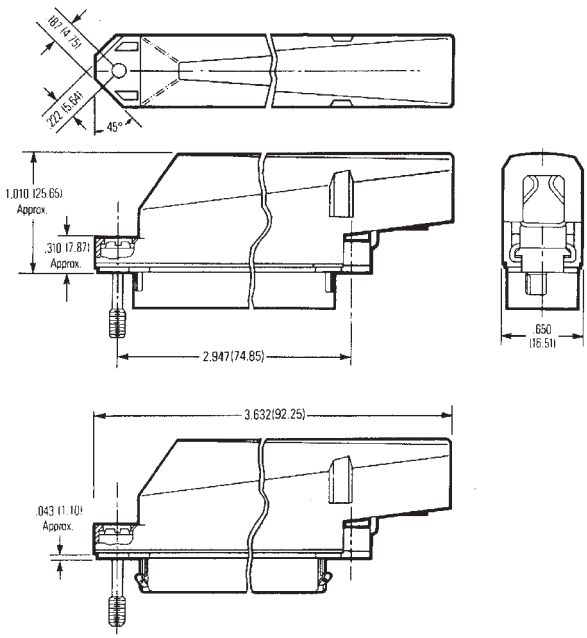

Ordering Information, Pointed-End

		Solid Wire #4-40 Threaded Hole with Screw Commercial	Solid Wire #4-40 Threaded Hole with Screw 30Au/Ni
Plug, InstaLatching			
	With Dust Cover	97-12500-91PD	97-12500-91PDA
	Without Dust Cover	97-12500-91P	97-12500-91PA
Socket, InstaLatching			
	With Dust Cover	97-22500-91PD	97-22500-91PDA
	Without Dust Cover	97-22500-91P	97-22500-91PA
Socket, No Latches			
	With Dust Cover	97-22500-93PD	97-22500-93PDA
	Without Dust Cover	97-22500-93P	97-22500-93PA

Features

- ***Patented contact terminates Discrete Wire (loose or jacketed cable) without stripping or soldering. Solid and stranded wire versions available.***
- ***Metal shell provides grounding and shielding capability.***
- ***Available in plug and socket styles in 14, 24, 36, and 50 position sizes.***
- ***Designed for panel mount, 180° (Top-Entry), or 90° (Standard) / 270° (Reverse) End-Entry cable applications.***
- ***Available as overmold kit in 36 and 50 position sizes.***
- ***All Plugs lock with InstaLatch passive latch feature for automatic latching. Sockets available with InstaLatches where indicated.***
- ***Industry-standard bail latch feature available for locking/unlocking without tools in applications such as SCSI-1 and Centronics.***
- ***Full range of application tooling available for termination, unlatching, etc. See page 6-54 for details.***
- ***UL Recognized - Files E170218 (UL1977), E130965 (UL1863).***
- ***CSA Approved - File LR31996-7.***

Materials

Insulator: Blue UL94V-0 rated glass-filled polyester

Contact: Copper alloy

Contact Plating: Select gold over 50µin. select nickel standard; 30µin. select gold over 50µin. select nickel available where indicated

Shell: Steel

Shell Plating: Zinc with clear chromate coating standard
Tin available where indicated

Environmental

Operating Temperature: -40°C to +105°C

Shock: 50G Peak, per EIA Std. RS364, TP27, Condition A

Vibration: 3 cycles @ 10-55Hz in each of 3 axes per EIA Std. 364, TP28, Condition A

Moisture Resistance: Per EIA Std. RS364, TP31, Condition B, with Step 7B excluded

Electrical

Voltage Rating: 500 VAC @ sea level; 125 VAC @ 70,000 ft.

Withstanding Voltage: 1200 VAC RMS @ sea level, per EIA Std. RS364, TP20

Contact Rating: 5 Amps (4 Amps per CSA)

Contact Resistance: 6 milliohms maximum, per EIA Std. RS364, TP6

Contact Resistance Change During Life Conditioning:

Wire Size	Resistance Change (milliohms, max.)
24 AWG Solid	0.5
26 AWG Solid	0.5
26 AWG Stranded	2.0
28 AWG Stranded	5.0

Insulation Resistance: 5000 Megohms minimum initial; 1000 Megohms minimum after moisture

Mechanical Characteristics

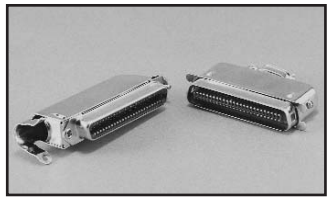

Durability: 200 mating/unmating cycles

Mating / Unmating Forces:

	Mating Force (max.) with InstaLatches		Unmating Force (min.) without InstaLatches	
Size	**Lb.**	**Kg**	**Lb.**	**Kg**
14	12	5.44	2	0.91
24	17	7.71	4	1.81
36	23	10.43	6	2.72
50	32	14.52	7	3.18

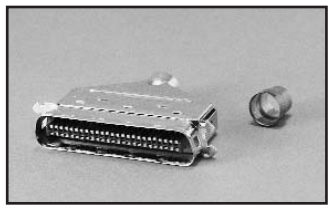

Termination: Solid IDC versions terminate 22 AWG - 26 AWG solid wire; Stranded IDC versions terminate 24 AWG - 28 AWG stranded wire; Recommended Wire Insulation: soft PVC, .040" (1.02mm) max. OD

Wire Grip Strength (using recommended wire type):

	Min. Force	
Wire Size	**Lb.**	**Kg**
24 AWG Solid	7	3.42
26 AWG Solid	5	2.44
26 AWG Stranded	5	2.44

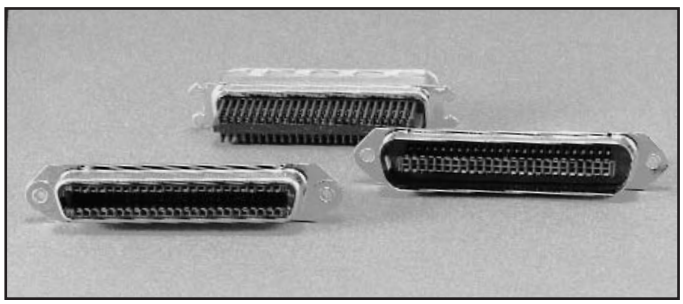

Panel Mount

"Panel mount" products are connectors without hoods. They are typically used to provide signal I/O from a system panel or cabinet, where strain relief to a cable jacket is not required.

- Standard versions have .103" mounting holes (sockets have .103" with float bushings) for use with #3 hardware, or with .185" mounting holes for use with #8 hardware.
- Select sizes are available with .120" or .113" mounting holes for use with #4 hardware, or with integral panel clips, which allow snap-in front mounting on .093" thick panels for more cost-effective assembly.
- Bail latching sockets are available, as are bail latching plugs. While the plugs would not be panel-mounted, they are available for premold/solder overmolding applications.
- SuperShield products include modified shells that assure interference fit between mated connectors for improved shielding performance.

See page 6-4 for recommended standard panel cutout dimensions.

See pages 6-51 thru 6-52 for accessories such as wire restraints, mounting screws, and dust covers, which make the use of Cinch Miniature Ribbon connectors even more cost-effective in panel-mount applications.

See the appropriate cable connector section that follows for products that include hoods for exposed-cable applications.

Dimensions

	A		B		C		D	
Size	in	mm	in	mm	in	mm	in	mm
14	1.750	44.45	1.417	35.99	0.910	23.11	-	-
24	2.175	55.25	1.842	46.79	1.335	33.91	-	-
36	2.685	68.20	2.352	59.74	1.845	46.86	2.426	61.62
50	3.280	83.31	2.947	74.85	2.440	61.98	3.020	76.71

Plug

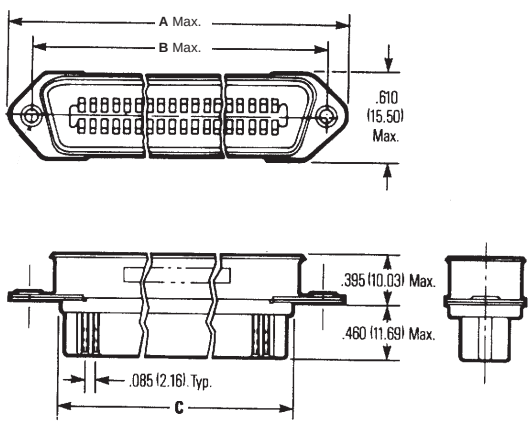

Socket

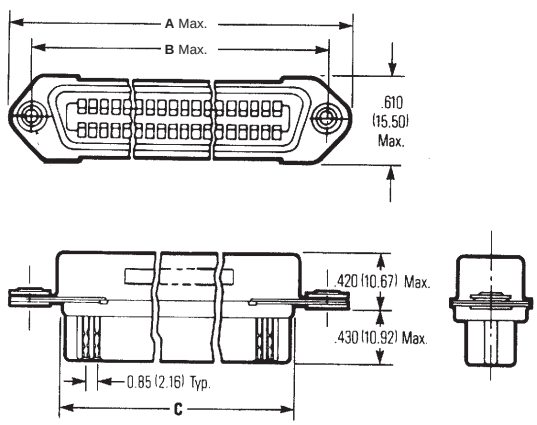

Ordering Information, Panel Mount

Plug, InstaLatching

Mount	Size	Solid Wire Commercial	Solid Wire 30Au/Ni
.103 Hole	14	77-12140	77-12140A
	24	77-12240	77-12240A
	36	77-12360	77-12360A
	50	77-12500	77-12500A
.103 Hole Tin-Plated Shells	24	77-12240-32	77-12240-32A
	36	77-12360-32	77-12360-32A
	50	77-12500-32	77-12500-32A
.185 Hole	14	77-12140-185	77-12140-185A
	24	77-12240-185	77-12240-185A
	36	77-12360-185	77-12360-185A
	50	77-12500-185	77-12500-185A
.185 Hole Tin-Plated Shells	24	77-12240-186	77-12240-186A
	36	77-12360-186	77-12360-186A
	50	77-12500-186	77-12500-186A
.120 Hole	50	77-12500-120	77-12500-120A
.120 Hole, Tin-Plated Shells	50	77-12500-121	77-12500-121A
SuperShield, .133 Hole	50	77-12500-SH	77-12500-SHA
Bail Latching	36	77-12360-5	77-12360-5A
Tin-Plated Shells	50	77-12500-10	77-12500-10A
* Integral Panel Clips .103 Hole	50	77-12500-41	77-12500-41A
Fixed 4-40 Screwlock	50	77-12500-43	77-12500-43A
SuperShield, .103 Hole	50	77-12500-SC	77-12500-SCA

**Integral Panel Clips, for front-mount only, require modified panel cutout. See page 6-52 for details.*

Through Hole

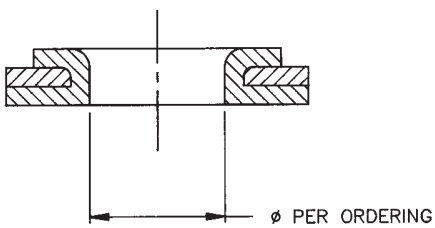

Bail Latching

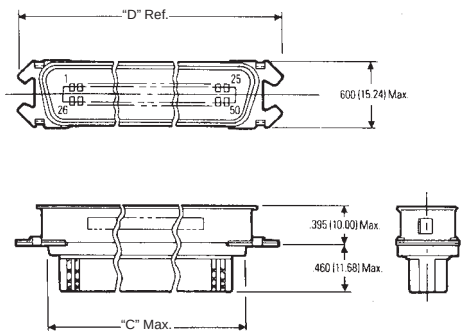

Integral Panel Clip

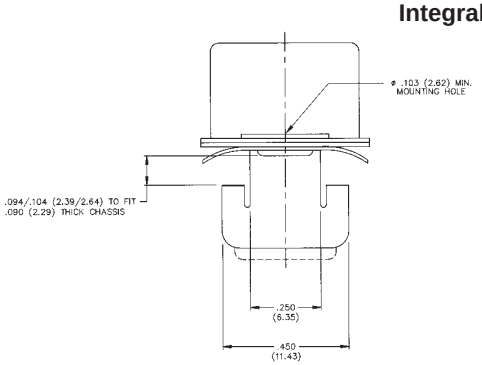

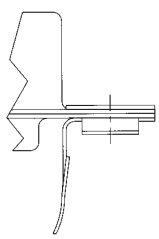

Ordering Information, Panel Mount (Cont'd)

	Socket			
			Solid Wire	
	Mount	Size	Commercial	30Au/Ni
No Latches	Float Mounts with .103 Hole	14	77-22140	77-22140A
		24	77-22240	77-22240A
		36	77-22360	77-22360A
		50	77-22500	77-22500A
	.103 Hole Tin-Plated Shells	24	77-22240-34	77-22240-34A
		36	77-22360-34	77-22360-34A
		50	77-22500-34	77-22500-34A
	.185 Hole	14	77-22140-185	77-22140-185A
		24	77-22240-185	77-22240-185A
		36	77-22360-185	77-22360-185A
		50	77-22500-185	77-22500-185A
	.185 Hole Tin-Plated Shells	24	77-22240-186	77-22240-186A
		36	77-22360-186	77-22360-186A
		50	77-22500-186	77-22500-186A
	.120 Hole	50	77-22500-120	77-22500-120A
	Integral Panel Clips*, .103 Hole	50	77-22500-41	77-22500-41A
	Integral Panel Clips* Fixed 4-40 Screwlocks	50	77-22500-43	77-22500-43A
Bail Latches	.116 Hole	14	77-42140	77-42140A
		24	77-42240	77-42240A
		36	77-42360	77-42360A
		50	77-42500	77-42500A
	.116 Hole with Tin-Plated Shell	36	77-42360-5	77-42360-5A
		50	77-42500-5	77-42500-5A
InstaLatches	.103 Hole Tin-Plated Shell	50	77- 22500-36	77- 22500-36A
	.113 Hole Tin-Plated Shell	50	77-22500-38	77-22500-38A
	SuperShield, .103 Hole with Integral Panel Clips*	50	77-22500-SC	77-22500-SCA

** Integral Panel Clips, for front-mount only, require modified panel cutout.*
See page 6-52 for details.

Through Hole

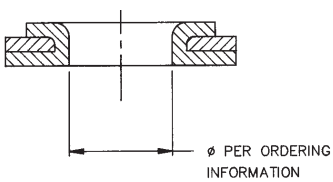

Bail Latching

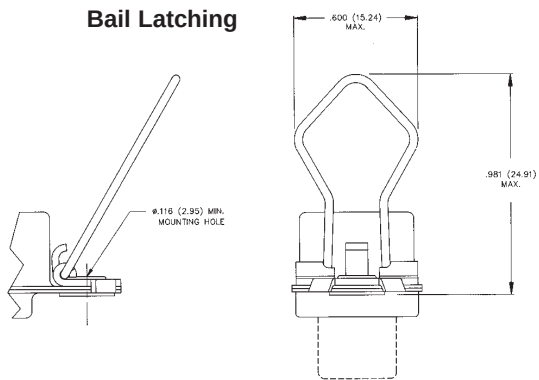

Float Mount

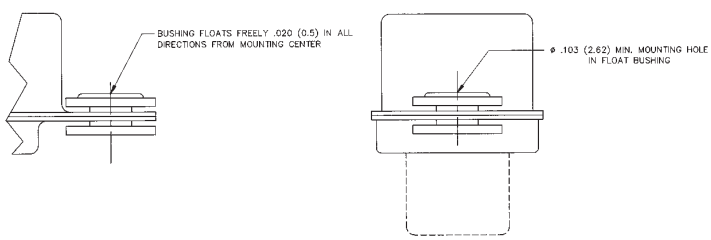

180° (Top-Entry) Cable

Top-Entry products include a connector, hood (or overmold can), and associated hardware.

They are typically used at the end of a cable, where it is subject to physical strain and protection of the termination area is required.

- Includes all hardware required to attach hood to connector.
- Bail latching sockets have latch hardware integral to the connector body, making cable assembly more efficient.
- Bail latching plugs include notches that lock with industry-standard bail-latch sockets.
- Select configurations are available as overmold kits, which lower assembly costs by eliminating premolding and foil soldering. Kits include connector and overmold cans. Crimp ferrules, which ground cable shields and provide strain relief, must be ordered separately.
- Ordering information for crimp ferrules is at end of end-entry product section. See page 6-22.

Plug

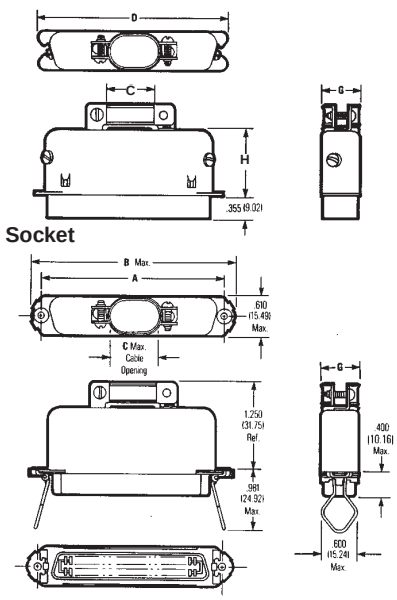

Overmold Kit

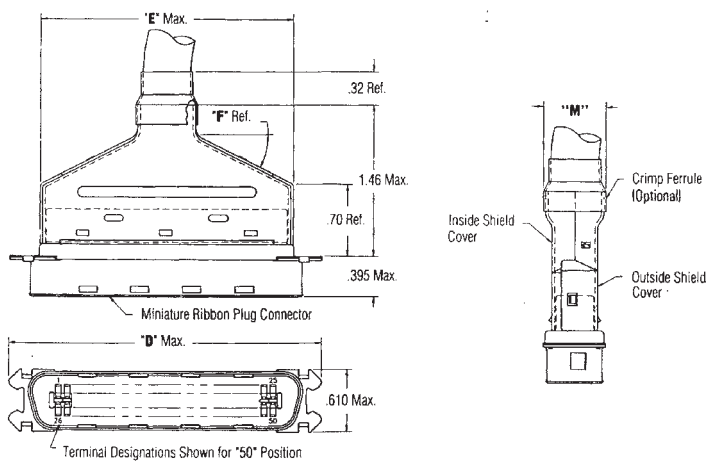

Dimensions

	A		B		C		D		E		F	G		H		M	
Size	in	mm	in	mm	in	mm	in	mm	in	mm	Deg.	in	mm	in	mm	in	mm
14	1.417	35.99	1.750	44.45	.306	7.77	1.495	37.97	-	-	-	.422	10.72	.843	21.41	-	-
24	1.842	46.79	2.175	55.25	.473	11.10	1.920	48.77	-	-	-	.473	12.01	.825	20.96	-	-
36	2.352	59.74	2.685	68.20	.639	16.23	2.431	61.75	1.83	46.48	37°	.473	12.01	.905	22.99	.52	13.21
50	2.947	74.85	3.270	83.06	.766	19.46	3.025	76.84	2.43	61.72	27°	.473	12.01	.995	25.27	.60	15.24

Ordering Information, 180° (Top-Entry) Cable

Plug, InstaLatching

	Mount	Size	Solid Wire Commercial	Solid Wire 30Au/Ni
	Bail Latching	14	77-32140	77-32140A
		24	77-32240	77-32240A
		36	77-32360	77-32360A
		50	77-32500	77-32500A
	Captive 4-40 Screws	50	77-32500-30	77-32500-30A
Overmold kit	Bail Latching, Tin Shell	36	77-32360-51	77-32360-51A
		50	77-32500-51	77-32500-51A
	.103 Hole, Tin Shell	36	77-32360-52	77-32360-52A
		50	77-32500-52	77-32500-52A

Socket

	Mount	Size	Solid Wire Commercial	Solid Wire 30Au/Ni
	With Bail Latches	14	77-62140	77-62140A
		24	77-62240	77-62240A
		36	77-62360	77-62360A
		50	77-62500	77-62500A
Overmold kit InstaLatch	.103 Hole, Tin-Plated Shells	50	77-62500-54	77-62500-54A
	.113 Hole, Tin-Plated Shells	50	77-62500-55	77-62500-55A

90° (Standard) / 270° (Reverse) End-Entry Cable

End-Entry connectors, available in 50 position size only, include a hood and integral cable clamp for cable exit from the end of the connector.

- The standard-orientation plug has the cable clamp on the position 1/26 end, and the standard-orientation socket has the clamp on the position 25/50 end.
- Cables may be extended end-to-end (i.e., “running cable”) by mating standard-orientation plugs and sockets, or “doubled back” by mating a standard-orientation connector with a reverse-orientation mate.
- Cables may exit either direction on a cable-to-panel application by choosing standard or reverse-orientation, depending on the desired direction of cable exit.
- Include screw that is 5/8" long, suitable for locking directly to the body of another connector. For locking to connectors panel-mounted with screwlock hardware, shorter screws are required. See page 6-51 for these and other accessories, such as dust covers.

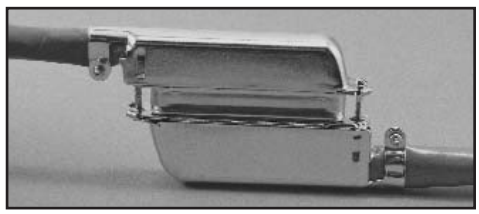

Running Cable Application

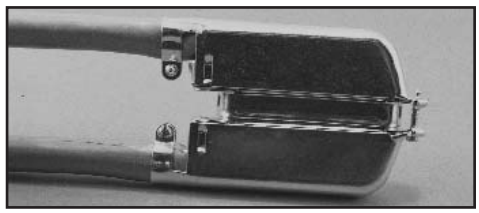

Double-Back Cable Application

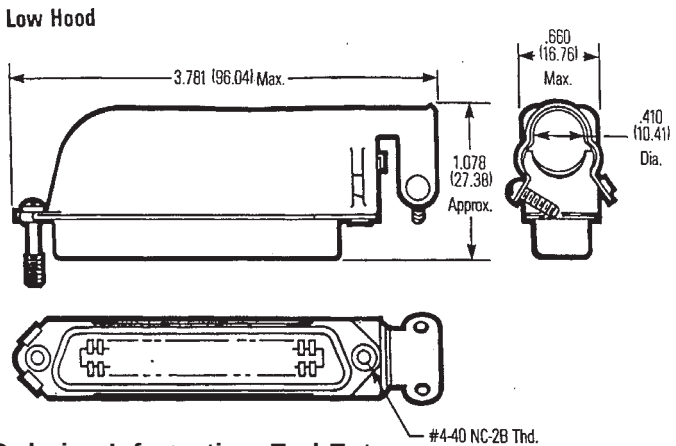

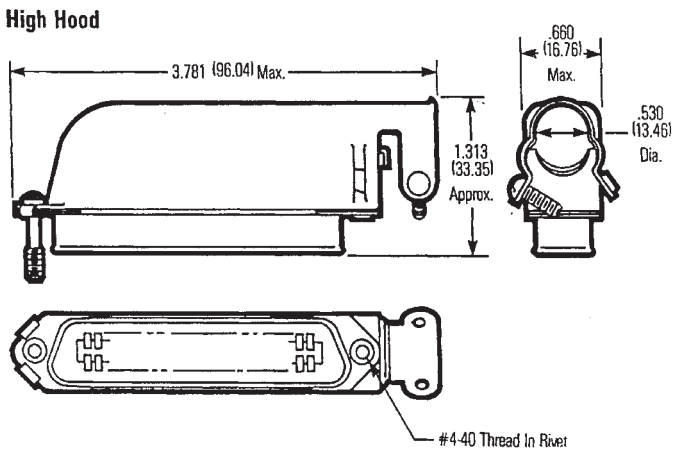

Ordering Information, End-Entry

Standard (90°) Orientation

	Mount	Size	Solid Wire Commercial	Solid Wire 30Au/Ni
Plug	High (Standard) Hood	50	77-72500	77-72500A
	Low-Profile Hood	50	77-72500-1	77-72500-1A
	SuperShield, 4-40 Screw	50	77-72500-SS	77-72500-SSA
Socket no latches	High (Standard) Hood	50	77-82500	77-82500A
	Low-Profile Hood	50	77-82500-1	77-82500-1A
	SuperShield, 4-40 Screw	50	77-82500-SS	77-82500-SSA

Reverse (270°) Orientation

	Mount	Size	Solid Wire Commercial	Solid Wire 30Au/Ni
Plug	High (Standard) Hood	50	77-72500-270	77-72500-270A
	Low-Profile Hood	50	77-72500-271	77-72500-271A
Socket no latches	High (Standard) Hood	50	77-82500-270	77-82500-270A
	Low-Profile Hood	50	77-82500-271	77-82500-271A

Overmold Kit, End-Entry
(May be assembled with cable exit in either direction)

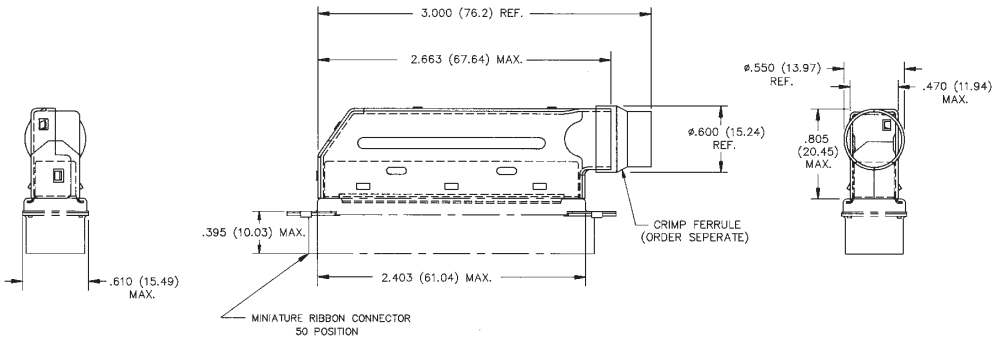

Ordering Information, End-Entry Overmold Kit

		Size	Solid Wire Commercial	Solid Wire 30Au/Ni
	Plug, Bail Latching, Tin Shell	50	77-72500-51	77-72500-51A
Socket InstaLatch	.103 Hole, Tin-Plated Shells	50	77-82500-54	77-82500-54A
Socket InstaLatch	.113 Hole, Tin-Plated Shells	50	77-82500-55	77-82500-55A

Overmold Crimp Ferrules

- Connect cable's shield to can of overmold kit
- Seal off cable exit to keep molding compound from penetrating termination cavity

See page 6-56 for tools and dies required to crimp ferrules onto overmold cans.

Ferrule

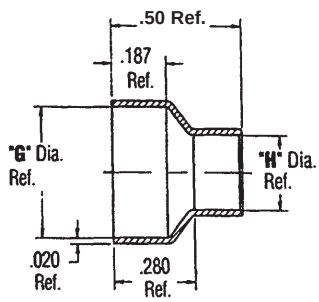

Ordering Information, Overmold Crimp Ferrules

Kit Size	Max. Cable O.D.	Ferrule Part Number	Dimensions G	Dimensions H
36	0.400	CF-64	.480 (12.19)	.400 (10.16)
50	0.390	CF-60	.580 (14.73)	.390 (9.91)
	0.480	CF-57	.580 (14.73)	.480 (12.19)

.085 in. (2.16mm) Density Miniature Ribbon

Solder Cup
Metal Shell

Cinch

Features

- ***Terminates Discrete Wire (loose or jacketed cable) with ultra-low-resistance solder connections.***
- ***Metal shell provides grounding and shielding capability.***
- ***Available in plug and socket styles in 14, 24, 36, and 50 position sizes.***
- ***Designed for panel mount, 180° (Top-Entry), or 90° (Standard) / 270° (Reverse) End-Entry cable applications.***
- ***All plugs lock with InstaLatch passive latch feature for automatic latching.***
- ***Industry-standard bail latch feature available for locking/unlocking without tools in applications such as SCSI-1 and Centronics.***
- ***UL Recognized - Files E170218 (UL1977), E130965 (UL1863).***
- ***CSA Approved - File LR31996-7.***

Materials

Insulator: Blue UL94V-0 rated diallyl phthalate type MDG, per MIL-M14F

Contact: Copper alloy

Contact Plating: Select gold over 50µin. select nickel standard;
30µin. select gold over 50µin. select nickel available where indicated

Shell: Steel

Shell Plating: Zinc with clear chromate coating

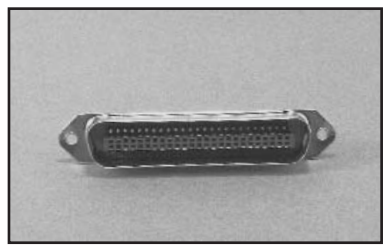

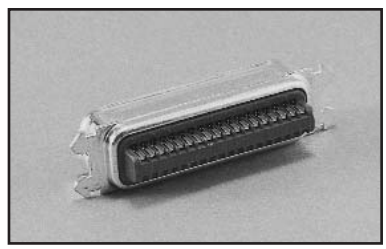

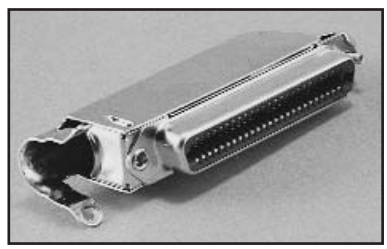

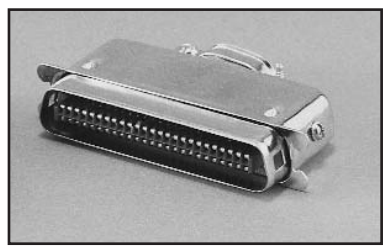

Environmental

Operating Temperature: -40°C to +105°C

Shock: 50G Peak, per EIA Std. RS364, TP27, Condition A

Vibration: 3 cycles @ 10-55Hz in each of 3 axes per EIA Std. 364, TP28, Condition A

Moisture Resistance: Per EIA Std. RS364, TP31, Condition B, with Step 7B excluded

Electrical

Voltage Rating:	500 VAC @ sea level; 125 VAC @ 70,000 ft.
Withstanding Voltage:	1200 VAC RMS @ sea level, per EIA Std. RS364, TP20
Contact Rating:	5 Amps (4 Amps per CSA)
Contact Resistance:	6 Milliohms maximum, per EIA Std. RS364, TP6
Insulation Resistance:	5000 Megohms minimum initial;
	1000 Megohms minimum after moisture

Mechanical

Durability: 200 mating/unmating cycles

Mating / Unmating Forces:

	Mating Force (max.)		Unmating Force (min.)	
Size	**Lb.**	**Kg**	**Lb.**	**Kg**
14	5	2.27	2	0.91
24	8	3.63	4	1.81
36	12	5.44	6	2.72
50	15	6.80	7	3.18

Termination: Each contact accepts maximum 22 AWG solid wire or maximum 24 AWG stranded wire

Panel Mount

"Panel mount" products are connectors without hoods. They are typically used to provide signal I/O from a system panel or cabinet, where strain relief to a cable jacket is not required.

- Available with high barrier insulators that extend beyond the end of the solder cup, physically isolating adjacent contacts.
- Standard versions have .103" mounting holes (sockets have .103" with float bushings) for use with #3 hardware, or .185" mounting holes for use with #8 hardware.
- Select sizes are available with .120" mounting holes for use with #4 hardware, or with integral panel clips, which allow snap-in front mounting for more cost-effective assembly.
- Bail latching sockets are available, as are bail latching plugs. While the plugs would not be panel-mounted, they are available for premold/solder overmolding applications.

See page 6-4 for recommended standard panel cutout dimensions.

See page 6-51 for accessories such as mounting screws and dust covers, which make the use of Cinch Miniature Ribbon connectors even more cost-effective in panel-mount applications.

See the appropriate cable connector section that follows for products that include hoods for exposed-cable applications.

Dimensions

	A		B		C	
Size	**in**	**mm**	**in**	**mm**	**in**	**mm**
14	1.750	44.45	1.417	35.99	0.910	23.11
24	2.175	55.25	1.842	46.79	1.335	33.91
36	2.685	68.20	2.352	59.74	1.845	46.86
50	3.260	82.80	2.947	74.85	2.440	61.98

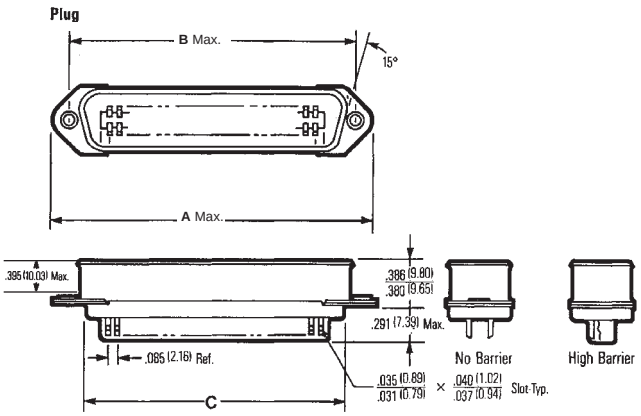

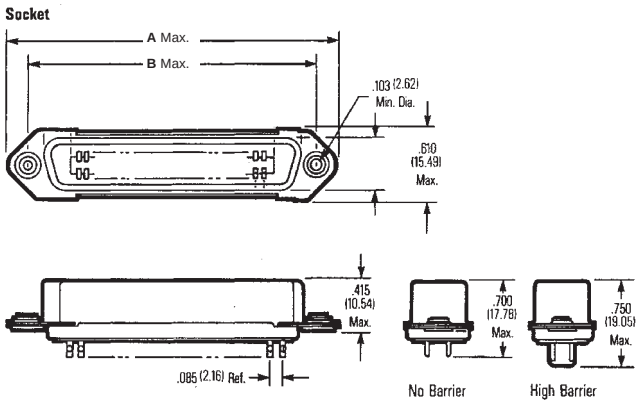

Through Hole

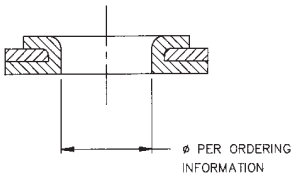

Bail Latches

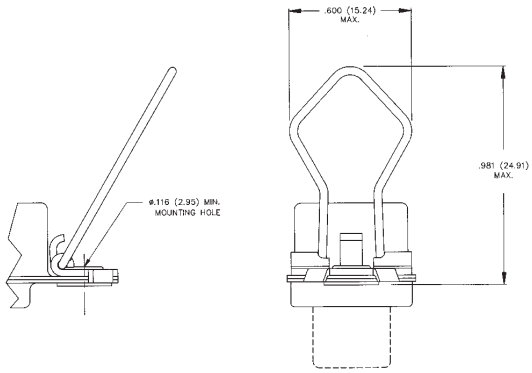

Integral Panel Clips

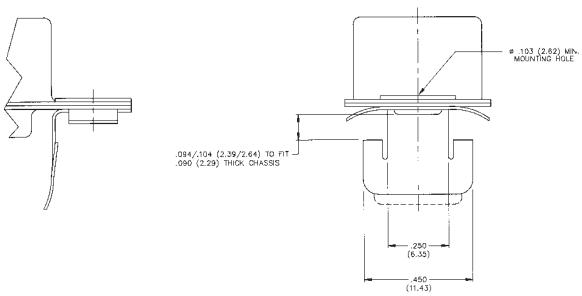

Float Mounts

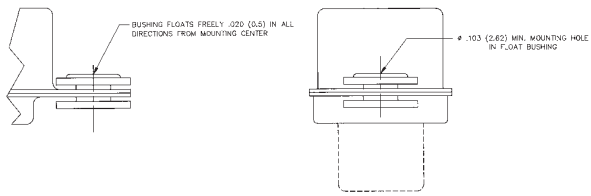

Ordering Information, Panel Mount

Plug, InstaLatching

Mount	Size	No Barrier Commercial	No Barrier 30Au/Ni	High Barrier Commercial	High Barrier 30Au/Ni
.103 Hole	14	57-10140	57-10140A	57-10140-6	57-10140-6A
	24	57-10240	57-10240A	57-10240-6	57-10240-6A
	36	57-10360	57-10360A	57-10360-14	57-10360-14A
	50	57-10500	57-10500A	57-10500-6	57-10500-6A
.185 Hole	14	57-10140-185	57-10140-185A	-	-
	24	57-10240-4	57-10240-4A	-	-
	36	57-10360-22	57-10360-22A	-	-
	50	57-10500-48	57-10500-48A	-	-
.120 Hole	50	-	-	57-10500-120	57-10500-120A
Integral Panel Clips*, .103 Hole	50	-	-	57-10500-41	57-10500-41A
Bail Latching Tin-Plated Shells	36	-	-	57-10360-28†	57-10360-28A†
	50	-	-	57-10500-79	57-10500-79A

† *IEEE 1284-B (for foil wrap & overmold applications)*

Socket

Latch	Mount	Size	No Barrier Commercial	No Barrier 30Au/Ni	High Barrier Commercial	High Barrier 30Au/Ni
No latches	Float Mounts with .103 Hole	14	57-20140	57-20140A	57-20140-6	57-20140-6A
		24	57-20240	57-20240A	57-20240-6	57-20240-6A
		36	57-20360	57-20360A	57-20360-10	57-20360-10A
		50	57-20500	57-20500A	57-20500-6	57-20500-6A
	.185 Hole	14	57-20140-4	57-20140-4A	-	-
		24	57-20240-2	57-20240-2A	-	-
		36	57-20360-3	57-20360-3A	-	-
		50	57-20500-15	57-20500-15A	-	-
	.120 Hole	50	-	-	57-20500-120	57-20500-120A
	Integral Panel Clips*, .103 Hole	50	-	-	57-20500-41	57-20500-41A
Bail latches	.116 Hole	14	57-40140	57-40140A	57-40140-HB	57-40140-HBA
		24	57-40240	57-40240A	57-40240-HB	57-40240-HBA
		36	57-40360†	57-40360A†	57-40360-9†	57-40360-9A†
		50	57-40500	57-40500A	57-40500-4	57-40500-4A
	.116 Hole with Tin-Plated Shell	50	57-40500-5	57-40500-5A	57-40500-28†	57-40500-28A†

** Integral Panel Clips, for front-mount only, require modified panel cutout. See page 6-52 for details.*
† *IEEE 1284-B*

180° (Top-Entry) Cable

Top-Entry products include a connector, hood, and associated hardware. They are typically used at the end of a cable, where it is subject to physical strain and protection of the termination area is required.

- Includes all hardware required to attach hood to connector.
- Bail latching sockets have latch hardware integral to connector body, making cable assembly less costly.
- Bail latching plugs include notches that lock with industry-standard bail-lock sockets.

Plug

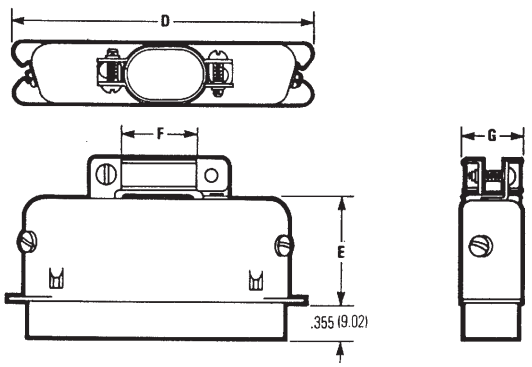

Socket

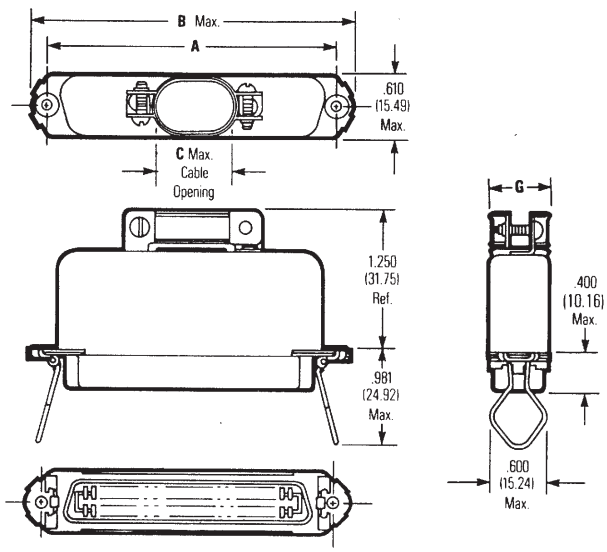

Dimensions

	A		B		C		D		E		F		G	
Size	in	mm	in	mm	in	mm	in	mm	in	mm	in	mm	in	mm
14	1.417	35.99	1.750	44.45	.306	7.77	1.495	37.97	.843	21.41	.306	7.77	.422	10.72
24	1.842	46.79	2.175	55.25	.473	11.10	1.920	48.77	.825	20.96	.473	12.01	.473	12.01
36	2.352	59.74	2.685	68.20	.639	16.23	2.431	61.75	.905	22.99	.640	16.26	.473	12.01
50	2.947	74.85	3.270	83.06	.766	19.46	3.025	76.84	.995	25.27	.766	19.46	.473	12.01

Ordering Information, 180° (Top-Entry) Cable

Plug, InstaLatching

		No Barrier		High Barrier	
Mount	Size	Commercial	30Au/Ni	Commercial	30Au/Ni
	14	57-30140	57-30140A	-	-
Bail Latching	24	57-30240	57-30240A	-	-
	36	57-30360	57-30360A	-	-
	50	57-30500	57-30500A	57-30500-3	57-30500-3A
#4-40 Holes for captive screw	50	57-30500-4	57-30500-4A	-	-

Socket

		No Barrier		High Barrier	
Mount	Size	Commercial	30Au/Ni	Commercial	30Au/Ni
	14	57-60140	57-60140A	-	-
With Bail Latches	24	57-60240	57-60240A	-	-
	36	57-60360	57-60360A	-	-
	50	57-60500	57-60500A	-	-

90° (Standard) / 270° (Reverse) End-Entry Cable

End-Entry connectors, available in 50 position size only, include a hood and integral cable clamp for cable exit from the end of the connector

- The standard-orientation plug has the cable clamp on the position 1/26 end, and the standard-orientation socket has the clamp on the position 25/50 end.
- Cables may be extended end-to-end (i.e., “running cable”) by mating standard-orientation plugs and sockets, or “doubled back” by mating a standard-orientation connector with a reverse-orientation mate.
- Cables may exit either direction on a cable-to-panel application by choosing standard- or reverse-orientation, depending on the desired direction of cable exit.
- Include screw that is 5/8" long, suitable for locking directly to the body of another connector. For locking to connectors panel-mounted with screw-lock hardware, shorter screws are required. See page 6-51 for these and other accessories, such as dust covers.

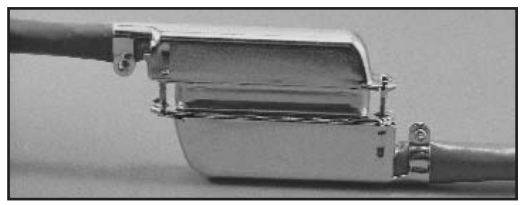

Running Cable Application

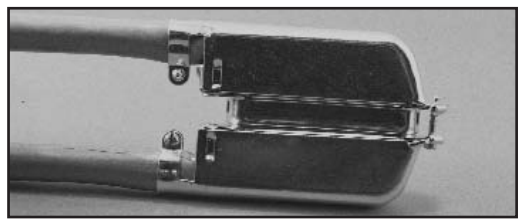

Double-Back Cable Application

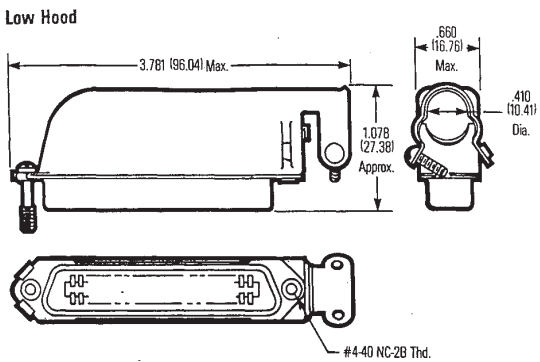

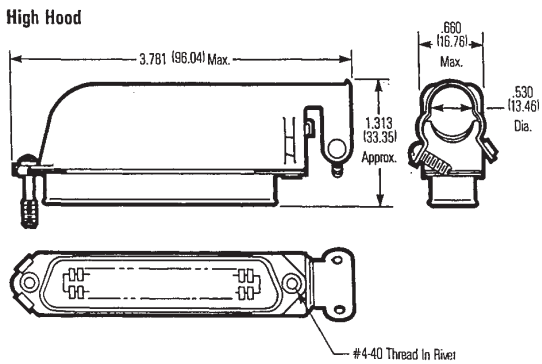

Ordering Information, End-Entry

Plug, InstaLatching (High Barrier, with Dust Cover)

		Standard (90°) Orientation		Reverse (270°) Orientation	
Mount	**Size**	**Commercial**	**30Au/Ni**	**Commercial**	**30Au/Ni**
High (Standard) Hood	50	57-10500-14	57-10500-14A	57-10500-270	57-10500-270A
Low-Profile Hood	50	57-10500-7	57-10500-7A	57-10500-271	57-10500-271A

Socket (High Barrier, with Dust Cover)

		Standard (90°) Orientation		Reverse (270°) Orientation	
Mount	**Size**	**Commercial**	**30Au/Ni**	**Commercial**	**30Au/Ni**
High (Standard) Hood	50	57-20500-7	57-20500-7A	57-20500-270	57-20500-270A
Low-Profile Hood	50	57-20500-19	57-20500-19A	57-20500-271	57-20500-271A

.085 in. (2.16mm) Density Miniature Ribbon

Wire Wrap
Metal Shell and All-Plastic

Cinch

Features

- ***Terminates Discrete Wire without soldering, on .025" sq. or .045" sq. tails.***
- ***All-plastic design reduces cost. Metal Shell available where indicated for improved shielding.***
- ***Available in plug and socket styles in 14, 24, 36, 50, and 64 position sizes.***
- ***All plugs lock with InstaLatch passive latch feature for automatic latching. Sockets available with InstaLatches where indicated.***
- ***Available with industry-standard bail latch feature for positive locking/unlocking without tools.***
- ***UL Recognized - Files E170218 (UL1977), E130965 (UL1863).***
- ***CSA Approved - File LR31996-7.***

Materials

Insulator (Metal Shell Product): Blue UL94V-0 rated dialyll phthalate type MDG per MIL-M14F
Insulator (All-Plastic Product): Gray UL94V-0 rated dialyll phthalate type MDG per MIL-M14F
Contact: Copper alloy
Contact Plating: Select gold over 50µin. select nickel standard;
30µin. select gold over 50µin. select nickel available where indicated
Wire-Wrap Terminal: Cupro nickel
Shell (Metal Shell Product): Steel
Shell Plating (Metal Shell Product): Zinc with clear chromate coating

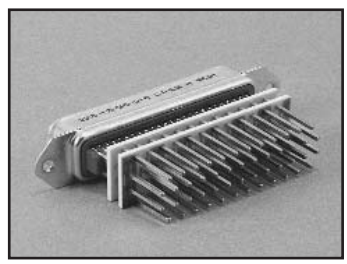

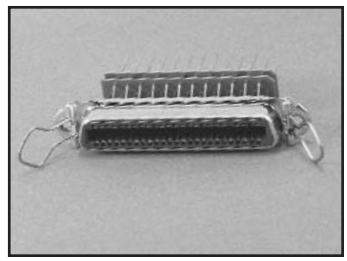

Environmental

Operating Temperature: -40°C to +105°C
Shock: 50G Peak, per EIA Std. RS364, TP27, Condition A
Vibration: 3 cycles @ 10-55Hz in each of 3 axes per EIA Std. 364, TP28, condition A
Moisture Resistance: Per EIA Std. RS364, TP31, Condition B, with step 7B excluded

Electrical

Voltage Rating:	500 VAC @ sea level; 125 VAC @ 70,000 ft.
Withstanding Voltage:	1200 VAC RMS @ sea level, per EIA Std. RS364, TP20
Contact Rating:	5 Amps (4 Amps per CSA)
Contact Resistance:	6 milliohms maximum, per EIA Std. RS364, TP6
Insulation Resistance:	5000 Megohms minimum initial; 1000 Megohms minimum after moisture

Mechanical

Durability: 200 mating/unmating cycles

Mating / Unmating Forces:

	Mating Force (max.) with InstaLatches		Unmating Force (min.) without InstaLatches	
Size	**Lb.**	**Kg**	**Lb.**	**Kg**
14	12	5.44	2	0.91
24	17	7.71	4	1.81
36	23	10.43	6	2.72
50	32	14.52	7	3.18
64	37	16.78	8	3.63

Metal Shell

- Metal Shell Wire Wrap connectors are available with .025" sq. or .045" sq. x 1.35" (.56" wrap length) terminals. .045" sq. terminals are also available with .850" (.28" wrap length) terminals.
- Available with .103" mounting holes for #3 hardware. Sockets also available with bail latches and .116" holes.

See page 6-4 for recommended standard panel cutout dimensions.

See page 6-51 for accessories such as mounting screws, bent bail latches, and dust covers, which make the use of Cinch Miniature Ribbon connectors even more cost-effective.

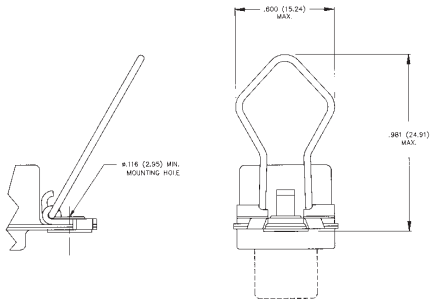

Bail Latches

Dimensions

	A		B		C		D	
Sizes	**in**	**mm**	**in**	**mm**	**in**	**mm**	**in**	**mm**
14	1.750	44.45	1.417	35.99	0.710	18.03	0.510	12.95
24	2.175	55.25	1.842	46.79	1.135	28.83	0.935	23.75
36	2.665	67.69	2.352	59.74	1.645	41.78	1.445	36.70
50	3.260	82.80	2.947	74.85	2.240	56.90	2.040	51.82

Metal Plug

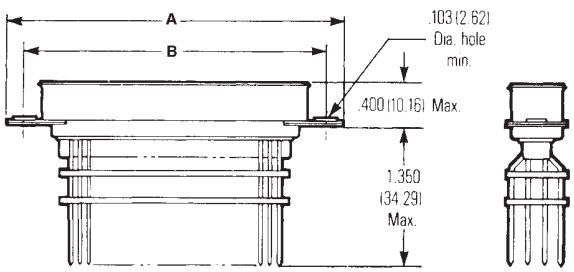

Metal Socket

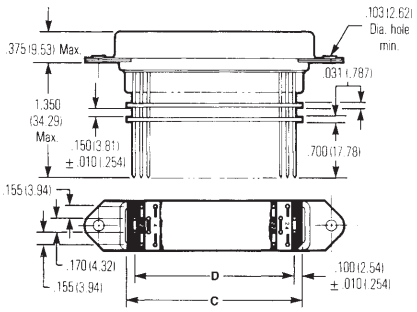

Ordering Information, Metal Shell

Plug, InstaLatching

		.025" sq. x 1.35" Terminals		.045" sq. x 1.35" Terminals		.045" sq. x .85" Terminals	
	Size	**Commercial**	**30Au/Ni**	**Commercial**	**30Au/Ni**	**Commercial**	**30Au/Ni**
.103 Hole	14	57-10140-WW1	57-10140-WW1A	57-10140-WW2	57-10140-WW2A	57-10140-WW3	57-10140-WW3A
	24	57-10240-WW1	57-10240-WW1A	57-10240-WW2	57-10240-WW2A	57-10240-WW3	57-10240-WW3A
	36	57-10360-WW1	57-10360-WW1A	57-10360-WW2	57-10360-WW2A	57-10360-WW3	57-10360-WW3A
	50	57-10500-WW1	57-10500-WW1A	57-10500-WW2	57-10500-WW2A	57-10500-WW3	57-10500-WW3A

Socket

		.025" sq. x 1.35" Terminals		.045" sq. x 1.35" Terminals		.045" sq. x .85" Terminals	
	Size	**Commercial**	**30Au/Ni**	**Commercial**	**30Au/Ni**	**Commercial**	**30Au/Ni**
.103 Hole	14	57-20140-WW1	57-20140-WW1A	57-20140-WW2	57-20140-WW2A	57-20140-WW3	57-20140-WW3A
	24	57-20240-WW1	57-20240-WW1A	57-20240-WW2	57-20240-WW2A	57-20240-WW3	57-20240-WW3A
	36	57-20360-WW1	57-20360-WW1A	57-20360-WW2	57-20360-WW2A	57-20360-WW3	57-20360-WW3A
	50	57-20500-WW1	57-20500-WW1A	57-20500-WW2	57-20500-WW2A	57-20500-WW3	57-20500-WW3A
Bail Latches, .116 Hole	14	57-20140-WW4	57-20140-WW4A	-	-	-	-
	24	57-20240-WW4	57-20240-WW4A	-	-	-	-
	36	57-20360-WW4	57-20360-WW4A	-	-	-	-
	50	57-20500-WW4	57-20500-WW4A	-	-	-	-

All-Plastic

- All-plastic Wire Wrap connectors are available with .025" sq. or .045" sq. x 1.35" (.56" wrap length) terminals.
- Available with .141" or .125" mounting holes as indicated, for #4 hardware.
- Includes InstaLatch passive latch feature for automatic latching.
  Sockets also available without latches.

See pages 6-4 and 6-52 for recommended panel cutout dimensions.

See pages 6-51 thru 6-52 for accessories such as mounting screws and dust covers, which make the use of Cinch Miniature Ribbon connectors even more cost-effective in panel-mount applications.

Plug

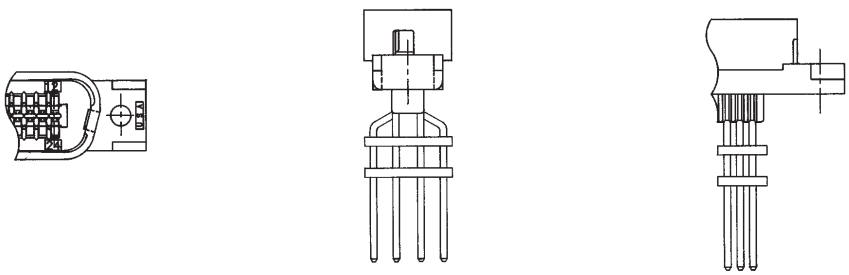

All-Plastic Socket

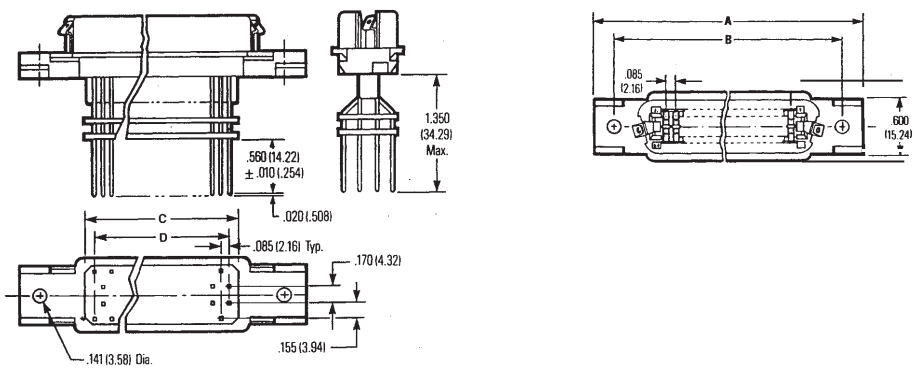

Dimensions, All-Plastic

	A		B		C		D	
Size	in	mm	in	mm	in	mm	in	mm
14	1.745	44.32	1.417	35.99	0.710	18.03	0.510	12.95
24	2.170	55.12	1.842	46.79	1.135	28.83	0.935	23.75
36	2.680	68.07	2.352	59.74	1.645	41.78	1.445	36.70
50	3.275	83.19	2.947	74.85	2.240	56.90	2.040	51.82
64	3.875	98.43	3.542	89.97	2.835	72.01	2.635	66.93

Ordering Information, All-Plastic

Plug, InstaLatching

		.025" sq. x 1.35" Terminals		.045" sq. x 1.35" Terminals	
Mount	**Size**	**Commercial**	**30Au/Ni**	**Commercial**	**30Au/Ni**
.140 Hole	24	-	-	97-10240-WW2	97-10240-WW2A
	64	-	-	97-10640-WW2	97-10640-WW2A

Socket

			.025" sq. x 1.35" Terminals		.045" sq. x 1.35" Terminals	
	Mount	**Size**	**Commercial**	**30Au/Ni**	**Commercial**	**30Au/Ni**
No latches	.141 Hole	14	97-22140-WW5	97-22140-WW5A	97-22140-WW6	97-22140-WW6A
		24	97-22240-WW5	97-22240-WW5A	97-22240-WW6	97-22240-WW6A
		36	97-22360-WW5	97-22360-WW5A	97-22360-WW6	97-22360-WW6A
		50	97-22500-WW5	97-22500-WW5A	97-22500-WW6	97-22500-WW6A
	.159 Hole	64	97-22640-WW5	97-22640-WW5A	97-22640-WW6	97-22640-WW6A
InstaLatches	.141 Hole	14	97-22140-WW1	97-22140-WW1A	97-22140-WW2	97-22140-WW2A
		24	97-22240-WW1	97-22240-WW1A	97-22240-WW2	97-22240-WW2A
		36	97-22360-WW1	97-22360-WW1A	97-22360-WW2	97-22360-WW2A
		50	97-22500-WW1	97-22500-WW1A	97-22500-WW2	97-22500-WW2A
	.159 Hole	64	97-22640-WW1	97-22640-WW1A	97-22640-WW2	97-22640-WW2A

.085 in. (2.16mm) Density Miniature Ribbon

Vertical-Mount Solder Tail Metal Shell

Cinch

Features

- ***Straight Solder Tails for solder termination to printed circuit board in lengths for use on all standard thickness boards.***
- ***Surface Mount Compatible; withstands vapor-phase and IR reflow processes.***
- ***Metal shell provides grounding and shielding capability.***
- ***Available in plug and socket styles in 14, 24, 36, and 50 position sizes.***
- ***All plugs lock with InstaLatch passive latch feature for automatic latching.***
- ***Industry-standard bail latch feature available for locking/unlocking without tools in applications such as SCSI-1 and Centronics.***
- ***Available, where indicated, with J-Hook latches that automatically lock down mating end-entry connectors.***
- ***Available, where indicated, with through-hole or threaded standoffs for improved board mounting.***
- ***Sockets available with through holes or with float mounts to provide limited self-alignment.***
- ***UL Recognized - Files E170218 (UL1977), E130965 (UL1863).***
- ***CSA Approved - File LR31996-7.***

Materials

Insulator: Blue UL94V-0 rated diallyl phthalate type MDG, per MIL-M14F
Contact: Copper alloy
Contact Plating: Select gold over 50µin. select nickel standard;
30µin. select gold over 50µin. select nickel available where indicated.
Gold flash on solder tails
Shell: Steel
Shell Plating: Zinc with clear chromate coating standard. Tin available where indicated.

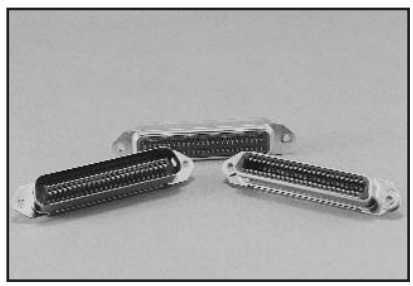

Environmental

Operating Temperature: -40°C to +105°C
Shock: 50G Peak, per EIA Std. RS364, TP27, Condition A
Vibration: 3 cycles @ 10-55Hz in each of 3 axes per EIA Std. 364, TP28, Condition A
Moisture Resistance: Per EIA Std. RS364, TP31, Condition B, with Step 7B excluded

Electrical

Voltage Rating:	500 VAC @ sea level; 125 VAC @ 70,000 ft.
Withstanding Voltage:	1200 VAC RMS @ sea level, per EIA Std. RS364, TP20
Contact Rating:	5 Amps (4 Amps per CSA)
Contact Resistance:	6 milliohms maximum, per EIA Std. RS364, TP6
Insulation Resistance:	5000 Megohms minimum initial; 1000 Megohms minimum after moisture

Mechanical

Durability: 200 mating/unmating cycles
Mating / Unmating Forces:

	Mating Force (max.)		Unmating Force (min.)	
Size	**Lb.**	**Kg**	**Lb.**	**Kg**
14	5	2.27	2	0.91
24	8	3.63	4	1.81
36	12	5.44	6	2.72
50	15	6.80	7	3.18

Plug, InstaLatching

Dimensions

	A		B		C	
Size	in	mm	in	mm	in	mm
14	1.750	44.45	1.417	35.99	0.910	23.11
24	2.175	55.25	1.842	46.79	1.335	33.91
36	2.685	68.20	2.352	59.74	1.845	46.86
50	3.260	82.80	2.947	74.85	2.440	61.98

Plug

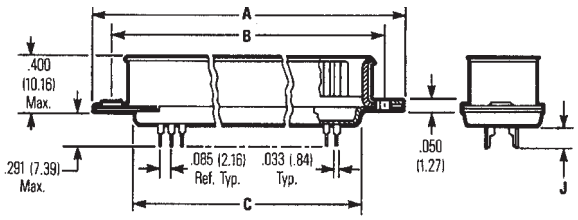

J-Hook Latches

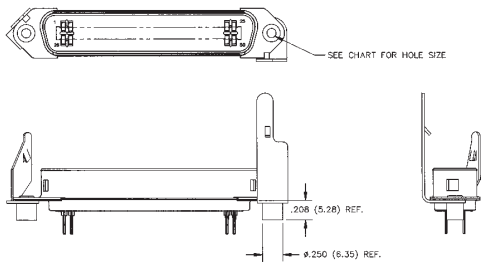

Conductive Standoff

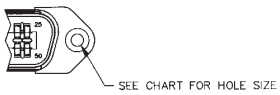

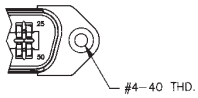

Insulated Standoff

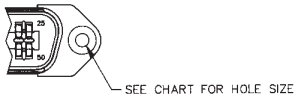

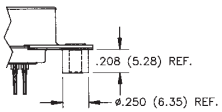

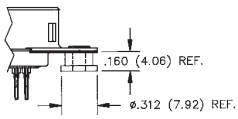

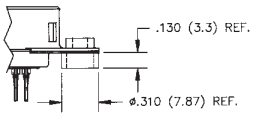

Ordering Information, Plug, InstaLatching

			.110" Tail Length (J) (for PCB thickness up to .062" nominal)		.145" Tail Length (J) (for PCB thickness up to .093" nominal)		.190" Tail Length (J) (for PCB thickness up to .125" nominal)	
	Mount	Size	Commercial	30Au/Ni	Commercial	30Au/Ni	Commercial	30Au/Ni
	.103 Hole	14	57-10140-4	57-10140-4A	57-10140-5	57-10140-5A	57-DS14P2-3	57-DS14P2-3A
		24	57-10240-3	57-10240-3A	57-10240-5	57-10240-5A	57-10240-12	57-10240-12A
		36	57-10360-13	57-10360-13A	57-10360-17	57-10360-17A	57-10360-25	57-10360-25A
		50	57-10500-27	57-10500-27A	57-10500-46	57-10500-46A	57-10500-73	57-10500-73A
	.185 Hole	14	57-DS14P1-1	57-DS14P1-1A	57-DS14P1-2	57-DS14P1-2A	57-DS14P1-3	57-DS14P1-3A
		24	57-DS24P1-1	57-DS24P1-1A	57-DS24P1-2	57-DS24P1-2A	57-DS24P1-3	57-DS24P1-3A
		36	57-DS36P1-1	57-DS36P1-1A	57-DS36P1-2	57-DS36P1-2A	57-DS36P1-3	57-DS36P1-3A
		50	57-DS50P1-1	57-DS50P1-1A	57-DS50P1-2	57-DS50P1-2A	57-DS50P1-3	57-DS50P1-3A
	Conductive Standoff .120 (Ref) Hole	50	-	-	-	-	57-10500-76	57-10500-76A
	Conductive Standoff 4-40 Hole	50	-	-	-	-	57-10500-77	57-10500-77A
	Insulated Standoff .120 (Ref) Hole	50	-	-	-	-	57-10500-68	57-10500-68A
	Insulated Standoff 4-40 Hole	50	-	-	-	-	57-10500-69	57-10500-69A
J-Hook Latches	Conductive Standoff .120 (Ref) Hole	50	-	-	-	-	57-10500J-76	57-10500J-76A
J-Hook Latches	Conductive Standoff 4-40 Hole	50	-	-	-	-	57-10500J-77	57-10500J-77A
J-Hook Latches	Insulated Standoff .120 (Ref) Hole	50	-	-	-	-	57-10500J-68	57-10500J-68A
J-Hook Latches	Insulated Standoff 4-40 Hole	50	-	-	-	-	57-10500J-69	57-10500J-69A

Socket

Dimensions

	A		B		C	
Size	in	mm	in	mm	in	mm
14	1.750	44.45	1.417	35.99	0.910	23.11
24	2.175	55.25	1.842	46.79	1.335	33.91
36	2.685	68.2	2.352	59.74	1.845	46.86
50	3.260	82.8	2.947	74.85	2.440	61.98

Socket with Bail Latches

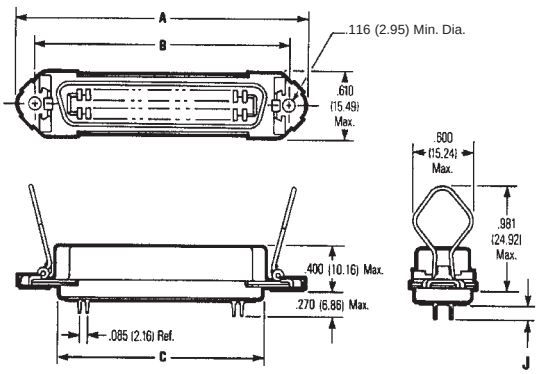

Bail Latches with Standoffs

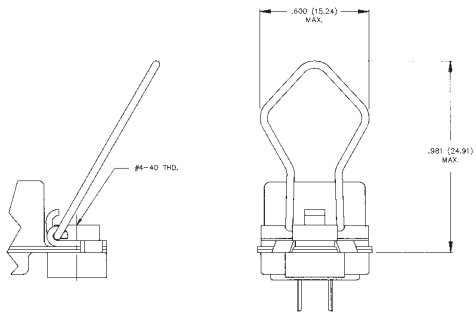

Socket with Float Bushing

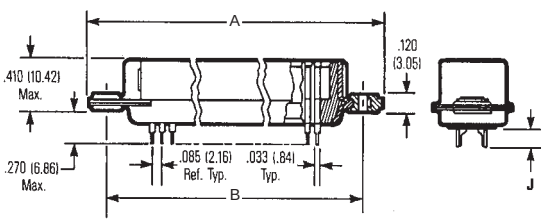

J-Hook Latches

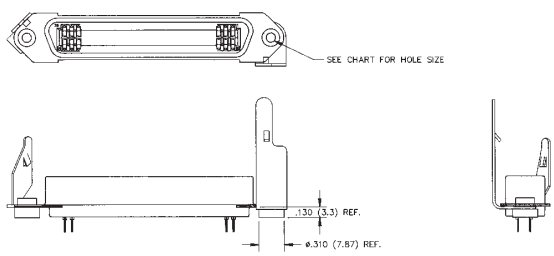

Recommended PCB Hole Layout

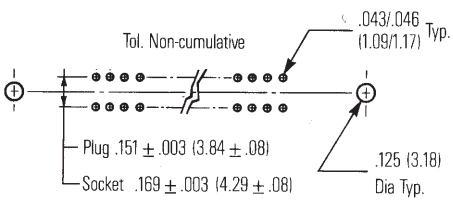

Socket

Ordering Information

	Latch Mount	Size	.110" Tail Length (J) (for PCB thickness up to .062" nominal) Commercial	30Au/Ni	.145" Tail Length (J) (for PCB thickness up to .093" nominal) Commercial	30Au/Ni	.190" Tail Length (J) (for PCB thickness up to .125" nominal) Commercial	30Au/Ni
No Latches	Float Mounts with .103 Hole	14	57-20140-8	57-20140-8A	-	-	-	-
		24	57-20240-8	57-20240-8A	-	-	-	-
		36	57-20360-9	57-20360-9A	-	-	-	-
		50	57-20500-31	57-20500-31A	-	-	-	-
	.185 Hole	14	57-20140-12	57-20140-12A	57-20140-10	57-20140-10A	57-DS14S1-3	57-DS14S1-3A
		24	57-20240-14	57-20240-14A	57-20240-11	57-20240-11A	57-20240-23	57-20240-23A
		36	57-20360-15	57-20360-15A	57-20360-13	57-20360-13A	57-20360-19	57-20360-19A
		50	57-20500-65	57-20500-65A	57-20500-58	57-20500-58A	57-20500-85	57-20500-85A
Bail Latches	.116 Hole	14	57-40140-8	57-40140-8A	57-40140-11	57-40140-11A	57-DS14S-3	57-DS14S-3A
		24	57-40240-9	57-40240-9A	57-40240-11	57-40240-11A	57-40240-14	57-40240-14A
		36	57-40360-12†	57-40360-12A†	57-40360-16†	57-40360-16A†	57-40360-24†	57-40360-24A†
		50	57-40500-9	57-40500-9A	57-40500-16	57-40500-16A	57-40500-24	57-40500-24A
	Conductive Standoff 4-40 Hole	50	-	-	-	-	57-40500-26	57-40500-26A
J-Hook Latches	Insulated Standoff .120 (Ref) Hole	50	-	-	-	-	57-20500J-78	57-20500J-78A
	Insulated Standoff 4-40 Hole	50	-	-	-	-	57-20500J-79	57-20500J-79A

† *IEEE 1284-B*

.085 in. (2.16mm) Density Miniature Ribbon

Vertical-Mount Solder Tail
All-Plastic

Cinch

Features

- ***Straight Solder Tails for solder termination to printed circuit board.***
- ***Available with .145" or .190" tail lengths to suit applications with any thickness PC board.***
- ***All-plastic design reduces cost.***
- ***Available in plug and socket styles in 14, 24, 36, 50, and 64 position sizes.***
- ***All plugs lock with InstaLatch passive latch feature for automatic latching. Sockets available with InstaLatches, with Bail Latches in sizes indicated, or with no latches.***
- ***Available with through holes or with #4-40 holes for mounting/latching.***
- ***UL Recognized - Files E170218 (UL1977), E130965 (UL1863).***
- ***CSA Approved - File LR31996-7.***

Materials

Insulator: Gray UL94V-0 rated glass-filled polyester

Contact: Copper Alloy

Contact Plating: Select gold over 50µin. select nickel standard; 30µin. select gold over 50µin. select nickel available where indicated. Gold flash on solder tails

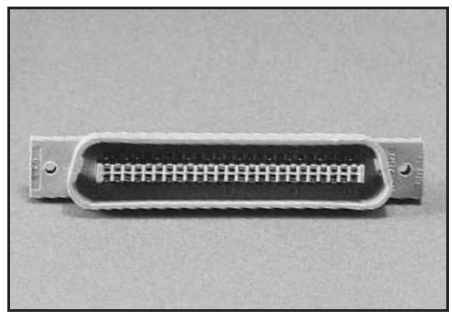

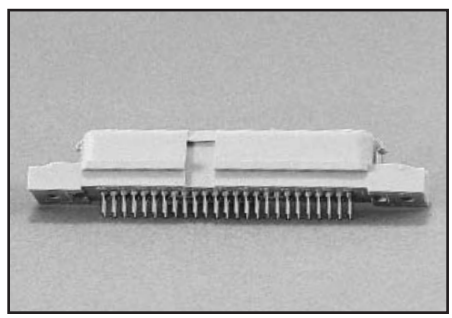

Environmental

Operating Temperature: -40°C to +105°C

Shock: 50G Peak, per EIA Std. RS364, TP27, Condition A

Vibration: 3 cycles @ 10-55Hz in each of 3 axes per EIA Std. 364, TP28, Condition A

Moisture Resistance: Per EIA Std. RS364, TP31, Condition B, with Step 7B excluded

Electrical

Voltage Rating: 500 VAC @ sea level; 125 VAC @ 70,000 ft.

Withstanding Voltage: 1200 VAC RMS @ sea level, per EIA Std. RS364, TP20

Contact Rating: 5 Amps (4 Amps per CSA)

Contact Resistance: 6 milliohms maximum, per EIA Std. RS364, TP6

Insulation Resistance: 5000 Megohms minimum initial; 1000 Megohms minimum after moisture

Mechanical

Durability: 200 mating/unmating cycles

Mating / Unmating Forces:

	Mating Force (max.) with InstaLatches		Unmating Force (min.) without InstaLatches	
Size	**Lb.**	**Kg**	**Lb.**	**Kg**
14	12	5.44	2	0.91
24	17	7.71	4	1.81
36	23	10.43	6	2.72
50	32	14.52	7	3.18
64	37	16.78	8	3.63

.085 in. (2.16mm) Density Miniature Ribbon

Vertical-Mount Solder Tail All-Plastic

Cinch

Vertical-mount Miniature Ribbon connectors provide I/O directly from printed circuit boards, where the mating face of the connector is in a plane parallel to that of the board.

See page 6-51 for accessories such as dust covers, bent bail latches, and mounting screws that make the use of Cinch Miniature Ribbon connectors even more cost-effective in board-mount applications.

Dimensions

	A		B	
Size	in	mm	in	mm
14	1.745	44.32	1.417	35.99
24	2.170	55.12	1.842	46.79
36	2.680	68.07	2.352	59.74
50	3.275	83.19	2.947	74.85
64	3.875	98.43	3.542	89.97

Recommended PCB Hole Layout

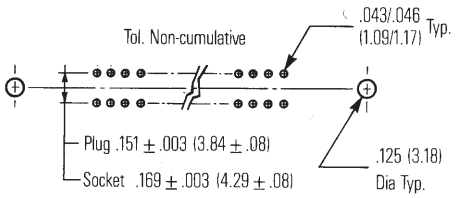

Socket

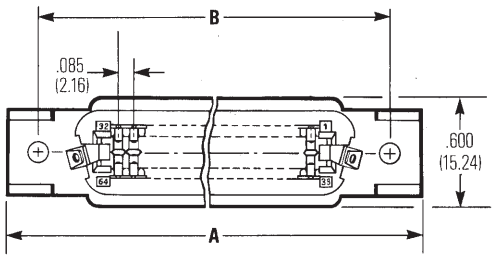

Plug

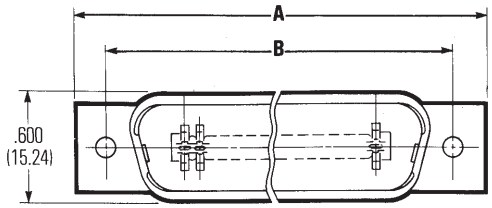

With InstaLatches

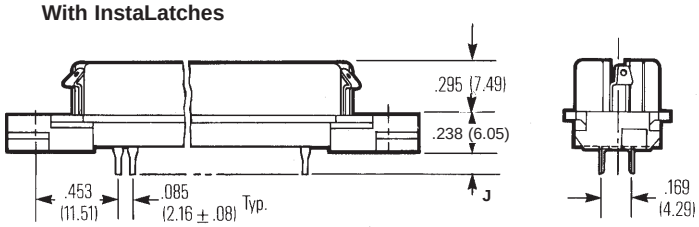

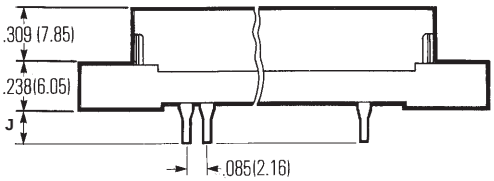

With Bail Latches

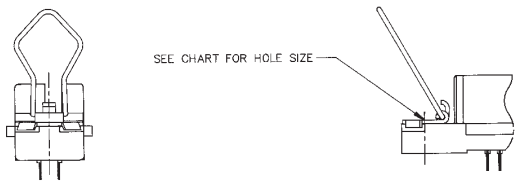

Ordering Information, Vertical-Mount Solder Tail

Plug, InstaLatching

Mount	Size	.138" Tail Length (J) (for PCB thickness up to .093" nominal) Commercial	30Au/Ni	.183" Tail Length (J) (for PCB thickness up to .125" nominal) Commercial	30Au/Ni
.125 Hole	14	97-DSP14-2	97-DSP14-2A	97-DSP14-3	97-DSP14-3A
	24	97-DSP24-2	97-DSP24-2A	97-DSP24-3	97-DSP24-3A
	36	97-DSP36-2	97-DSP36-2A	97-DSP36-3	97-DSP36-3A
	50	97-DSP50-2	97-DSP50-2A	97-DSP50-3	97-DSP50-3A
	64	97-DSP64-2	97-DSP64-2A	97-DSP64-3	97-DSP64-3A
#4-40 Hole	14	97-DSP14-12	97-DSP14-12A	97-DSP14-13	97-DSP14-13A
	24	97-DSP24-12	97-DSP24-12A	97-DSP24-13	97-DSP24-13A
	36	97-DSP36-12	97-DSP36-12A	97-DSP36-13	97-DSP36-13A
	50	97-DSP50-12	97-DSP50-12A	97-DSP50-13	97-DSP50-13A
	64	97-DSP64-12	97-DSP64-12A	97-DSP64-13	97-DSP64-13A

Socket

Latch	Mount	Size	.138" Tail Length (J) (for PCB thickness up to .093" nominal) Commercial	30Au/Ni	.183" Tail Length (J) (for PCB thickness up to .125" nominal) Commercial	30Au/Ni
No latches	.125 Hole	14	97-DSS14-22	97-DSS14-22A	97-DSS14-23	97-DSS14-23A
		24	97-DSS24-22	97-DSS24-22A	97-DSS24-23	97-DSS24-23A
		36	97-DSS36-22	97-DSS36-22A	97-DSS36-23	97-DSS36-23A
		64	97-DSS64-22	97-DSS64-22A	97-DSS64-23	97-DSS64-23A
	.160 Hole	50	97-DSS50-22	97-DSS50-22A	97-DSS50-23	97-DSS50-23A
	#4-40 Hole	14	97-DSS14-32	97-DSS14-32A	97-DSS14-33	97-DSS14-33A
		24	97-DSS24-32	97-DSS24-32A	97-DSS24-33	97-DSS24-33A
		36	97-DSS36-32	97-DSS36-32A	97-DSS36-33	97-DSS36-33A
		50	97-DSS50-32	97-DSS50-32A	97-DSS50-33	97-DSS50-33A
		64	97-DSS64-32	97-DSS64-32A	97-DSS64-33	97-DSS64-33A
InstaLatches	.125 Hole	14	97-DSS14-2	97-DSS14-2A	97-DSS14-3	97-DSS14-3A
		24	97-DSS24-2	97-DSS24-2A	97-DSS24-3	97-DSS24-3A
		36	97-DSS36-2	97-DSS36-2A	97-DSS36-3	97-DSS36-3A
		64	97-DSS64-2	97-DSS64-2A	97-DSS64-3	97-DSS64-3A
	.160 Hole	50	97-DSS50-2	97-DSS50-2A	97-DSS50-3	97-DSS50-3A
	#4-40 Hole	14	97-DSS14-12	97-DSS14-12A	97-DSS14-13	97-DSS14-13A
		24	97-DSS24-12	97-DSS24-12A	97-DSS24-13	97-DSS24-13A
		36	97-DSS36-12	97-DSS36-12A	97-DSS36-13	97-DSS36-13A
		50	97-DSS50-12	97-DSS50-12A	97-DSS50-13	97-DSS50-13A
		64	97-DSS64-12	97-DSS64-12A	97-DSS64-13	97-DSS64-13A
Bail Latches, .116 Hole		24	97-DSS24-42	97-DSS24-42A	97-DSS24-43	97-DSS24-43A
		36	97-DSS36-42	97-DSS36-42A	97-DSS36-43	97-DSS36-43A
		50	97-DSS50-42	97-DSS50-42A	97-DSS50-43	97-DSS50-43A

.085 in. (2.16mm) Density Miniature Ribbon

Vertical-Mount Compliant Pin
All-Plastic and Metal Shell

Cinch

Features

- ***Straight Compliant Pin for solderless termination to printed circuit board.***
- ***All-plastic design reduces cost. Metal Shell also available where indicated for improved shielding.***
- ***Available in plug and socket styles in 14, 24, 36, 50, and 64 position sizes.***
- ***All plugs lock with InstaLatch passive latch feature for automatic latching. Sockets available with InstaLatches, with Bail Latches where indicated, or with no latches.***
- ***Available with through holes or with #4-40 holes for mounting/latching.***
- ***Includes Seating Cover that allows for flat-rock insertion and serves as dust cover after insertion.***
- ***UL Recognized - Files E170218 (UL1977), E130965 (UL1863).***
- ***CSA Approved - File LR31996-7.***

Materials

Insulator and Seating Cover: Gray UL94V-0 rated glass-filled polyester
Contact: Phosphor bronze
Contact Plating: Select gold over 50µin. select nickel standard; 30µin. select gold over 50µin. select nickel available where indicated. Gold flash in termination area
Shell (Metal Shell Version Only): Steel
Shell Plating (Metal Shell Version Only): Tin

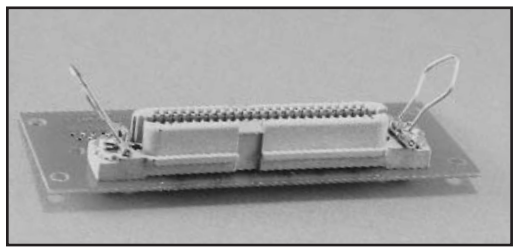

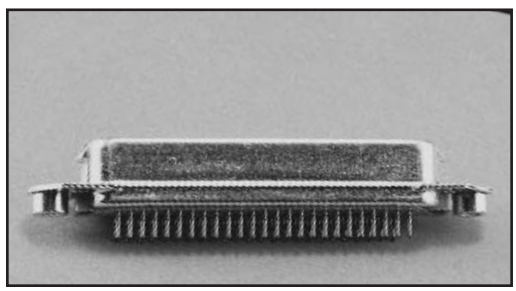

Environmental

Operating Temperature: -40°C to +105°C
Shock: 50G Peak, per EIA Std. RS364, TP27, Condition A
Vibration: 3 cycles @ 10-55Hz in each of 3 axes per EIA Std. 364, TP28, Condition A
Moisture Resistance: Per EIA Std. RS364, TP31, Condition B, with Step 7B excluded

Electrical

Voltage Rating: 500 VAC @ sea level; 125 VAC @ 70,000 ft.
Withstanding Voltage: 1200 VAC RMS @ sea level, per EIA Std. RS364, TP20
Contact Rating: 5 Amps (4 Amps per CSA)
Contact Resistance: 6 milliohms maximum, per EIA Std. RS364, TP6
Insulation Resistance: 5000 Megohms minimum initial; 1000 Megohms minimum after moisture

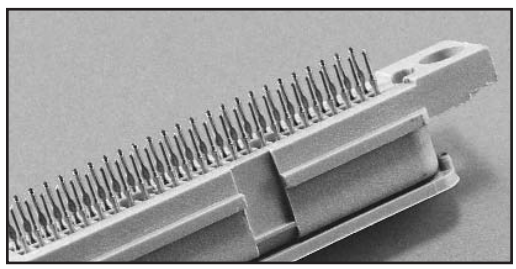

Mechanical

Durability: 200 mating/unmating cycles
Mating / Unmating Forces:

	Mating Force (max.) with InstaLatches		Unmating Force (min.) without InstaLatches	
Size	**Lb.**	**Kg**	**Lb.**	**Kg**
14	12	5.44	2	0.91
24	17	7.71	4	1.81
36	23	10.43	6	2.72
50	32	14.52	7	3.18
64	37	16.78	8	3.63

Connector/PCB Insertion Force (maximum): 25 lbs (12.3Kg) per contact

Connector/PCB Retention Force: 5 lb. (2.44Kg) per contact **(minimum, without mounting hardware)**

Vertical-mount Miniature Ribbon connectors provide I/O directly from printed circuit boards, where the mating face of the connector is in a plane parallel to that of the board.

Compliant-pin connectors terminate without solder to plated-through holes in printed circuit boards. The tail conforms to the hole, providing a gas-tight termination without damaging the plating in the printed circuit board.

The seating cover acts as an insertion tool fixture, and *must be left in place until the connector is installed on the PCB.* It may also be left on after insertion to serve as a dust cover to protect the connector from contamination.

See pages 6-51 through 6-53 for accessories such as bent bail latches and mounting screws that make the use of Cinch Miniature Ribbon connectors even more cost-effective in board-mount applications.

Dimensions

	A		B		C	
Size	**in**	**mm**	**in**	**mm**	**in**	**mm**
14	1.745	44.32	1.417	35.99	.625	15.88
24	2.170	55.12	1.842	46.79	1.050	26.67
36	2.680	68.07	2.352	59.74	1.560	39.62
50	3.275	83.19	2.947	74.85	2.155	54.74
64	3.875	98.43	3.542	89.97	2.750	69.85

Plug

Socket with Bail Latches

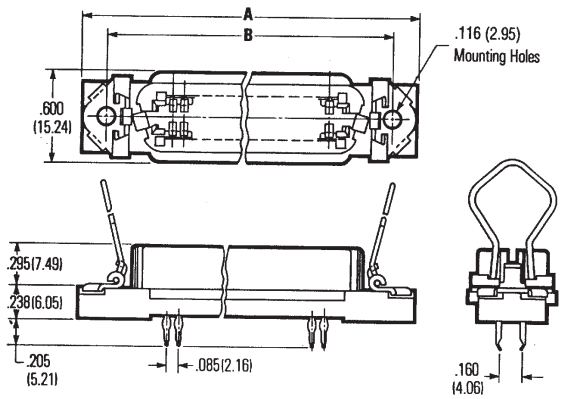

Socket with InstaLatches

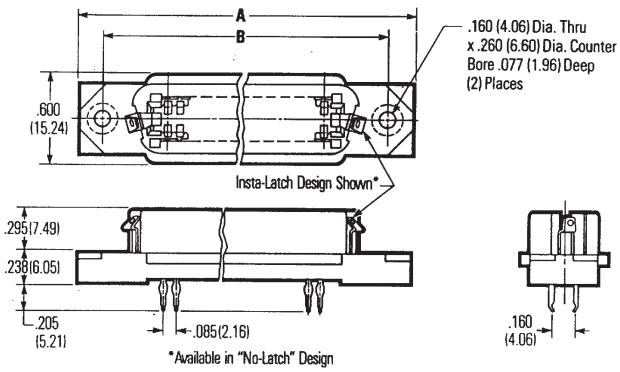

Recommended PCB Hole Layout

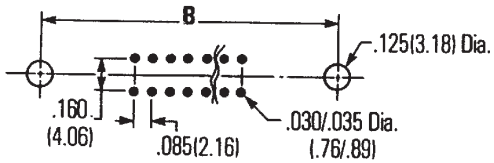

Insertion Fixture Backer Plate

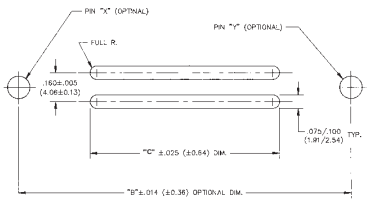

Ordering Information, Vertical-Mount Compliant Pin

All-Plastic Plug, InstaLatching

Mount	Size	Commercial	30Au/Ni
.125 Hole	14	97-CP-14	97-CP-14A
	24	97-CP-24	97-CP-24A
	36	97-CP-36	97-CP-36A
	50	97-CP-50	97-CP-50A
	64	97-CP-64	97-CP-64A
#4-40 Hole	14	97-CP-14T	97-CP-14TA
	24	97-CP-24T	97-CP-24TA
	36	97-CP-36T	97-CP-36TA
	50	97-CP-50T	97-CP-50TA
	64	97-CP-64T	97-CP-64TA

All-Plastic Socket

	Latch Mount	Size	Commercial	30Au/Ni
No latches	.160 Hole	14	97-CS-14	97-CS-14A
		24	97-CS-24	97-CS-24A
		36	97-CS-36	97-CS-36A
		50	97-CS-50	97-CS-50A
		64	97-CS-64	97-CS-64A
	#4-40 Hole	14	97-CS-14T	97-CS-14TA
		24	97-CS-24T	97-CS-24TA
		36	97-CS-36T	97-CS-36TA
		50	97-CS-50T	97-CS-50TA
		64	97-CS-64T	97-CS-64TA
InstaLatches	.160 Hole	14	97-CSI-14	97-CSI-14A
		24	97-CSI-24	97-CSI-24A
		36	97-CSI-36	97-CSI-36A
		50	97-CSI-50	97-CSI-50A
		64	97-CSI-64	97-CSI-64A
	#4-40 Hole	14	97-CSI-14T	97-CSI-14TA
		24	97-CSI-24T	97-CSI-24TA
		36	97-CSI-36T	97-CSI-36TA
		50	97-CSI-50T	97-CSI-50TA
		64	97-CSI-64T	97-CSI-64TA
Bail latches	.116 Hole	14	97-CSB-14	97-CSB-14A
		24	97-CSB-24	97-CSB-24A
		36	97-CSB-36	97-CSB-36A
		50	97-CSB-50	97-CSB-50A
		64	97-CSB-64	97-CSB-64A

Metal Shell Socket, with InstaLatches

		Commercial	30Au/Ni
Conductive Standoff with .120 Hole	50	57-CSI-50	57-CSI-50A

.085 in. (2.16mm) Density Miniature Ribbon

Right-Angle Solder Tail Metal Shell

Cinch

Features

- ***Right-Angle Solder Tails for solder termination to printed circuit board.***
- ***Metal shell provides grounding and shielding capability.***
- ***Available in plug and socket styles in 14, 24, 36, and 50 position sizes.***
- ***Sockets available with industry-standard bail latch feature for positive locking/unlocking without tools, for applications such as SCSI-1 and Centronics.***
- ***#4-40 threaded board mounting holes provide means to secure and ground connector to board.***
- ***UL Recognized - File E170218.***

Materials

Insulator: Blue UL94V-0 rated glass-filled polyester

Contact: Phosphor bronze

Contact Plating: Select gold over nickel in mating area as indicated; tin-lead on solder tails

Shell: Steel

Shell Plating: Nickel

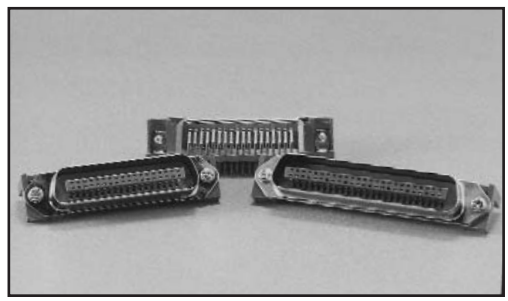

Environmental

Operating Temperature: -55°C to +105°C

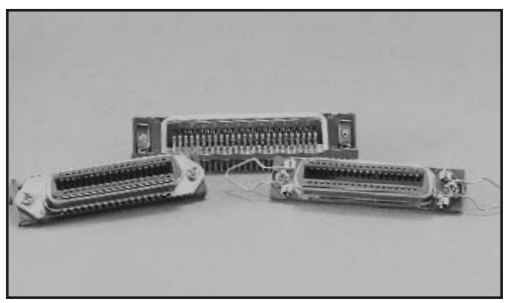

Electrical

Withstanding Voltage:	1000 VAC RMS @ sea level
Contact Rating:	5 Amps
Contact Resistance:	30 milliohms maximum
Insulation Resistance:	1000 Megohms minimum

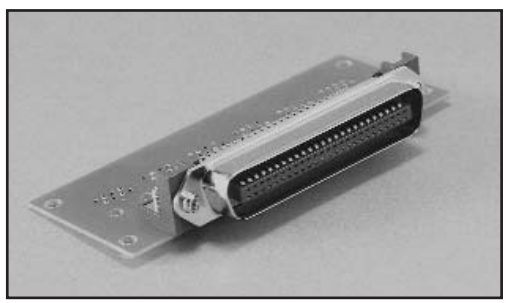

Right-Angle Miniature Ribbon connectors provide I/O directly from printed circuit boards, where the mating face of the connector is perpendicular to the board. It is well-suited to front-panel I/O on plug-in cards, rear-I/O from system/peripheral motherboards, etc.

See page 6-51 for accessories such as dust covers, bent bail latches and mounting screws that make the use of Cinch Miniature Ribbon connectors even more cost-effective in board-mount applications.

Dimensions

	A		B		C		D	
Size	**in**	**mm**	**in**	**mm**	**in**	**mm**	**in**	**mm**
14	1.720	43.70	1.417	35.99	0.992	25.20	1.008	25.60
24	2.146	54.50	1.842	46.79	1.417	36.00	1.436	36.00
36	2.661	67.60	2.352	59.74	1.925	48.90	1.943	49.35
50	3.260	82.80	2.947	74.85	2.520	64.00	2.538	64.00

Socket

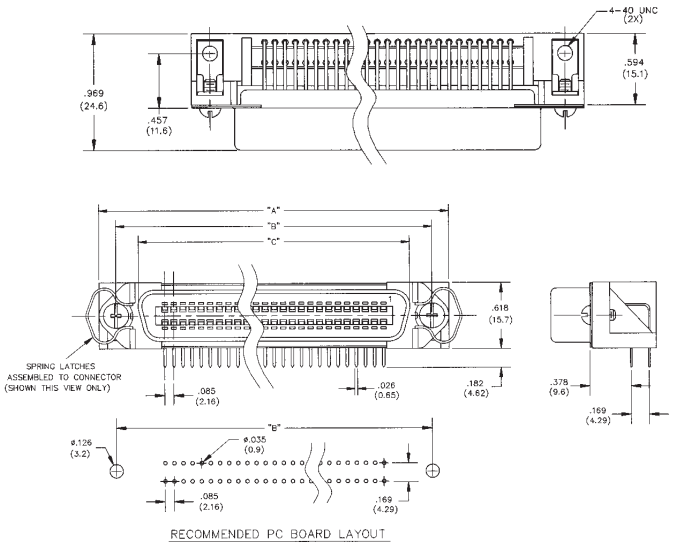

Plug

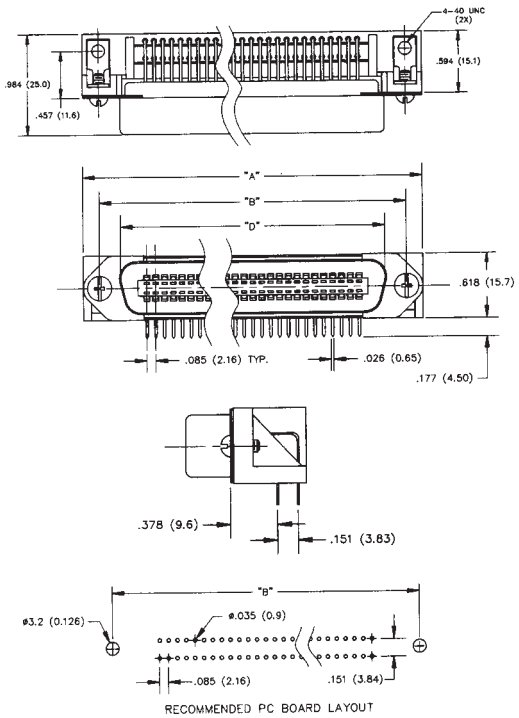

Ordering Information, Right-Angle Solder Tail

Plug, 4-40 Board Mount

Size	Flash	15Au/Ni	30Au/Ni
36	57-LRP36-F	57-LRP36-15	57-LRP36-30
50	57-LRP50-F	57-LRP50-15	57-LRP50-30

Socket, 4-40 Board Mount

Latch	Size	Flash	15Au/Ni	30Au/Ni
No Latches	14	57-LRS14-F	57-LRS14-15	57-LRS14-30
	24	57-LRS24-F	57-LRS24-15	57-LRS24-30
	36	57-LRS36-F	57-LRS36-15	57-LRS36-30
	50	57-LRS50-F	57-LRS50-15	57-LRS50-30
Bail Latch	14	57-LRS14-BF	57-LRS14-B15	57-LRS14-B30
	24	57-LRS24-BF	57-LRS24-B15	57-LRS24-B30
	36	57-LRS36-BF†	57-LRS36-B15†	57-LRS36-B30†
	50	57-LRS50-BF	57-LRS50-B15	57-LRS50-B30

† *IEEE 1284-B*

.085 in. (2.16mm) Density Miniature Ribbon

Filtered Vertical-Mount Solder Tail and Male/Female Adapter

Cinch

Features

- ***Low-pass (single-pole, capacitive) filtered contacts reduce inbound and outbound conducted EMI standard capacitance values of 50pF through 1,200pF.***
- ***Saves space by incorporating required filter functions directly into footprint of I/O connector.***
- ***Available as straight Solder Tail plug for solder termination to printed circuit board (nominal thickness through .093") and as plug/socket adapter, in 50-position size.***
- ***All-plastic design reduces cost.***
- ***All plugs lock with InstaLatch passive latch feature for automatic latching.***
- ***Adapters available with InstaLatches, with Bail Latches, or with no latches on socket side.***
- ***Available with through holes, #4-40 holes, #6-32 holes, or M3 holes for mounting/latching.***

Materials

Insulator: Gray UL94V-0 rated glass-filled polyester
Contact: Copper alloy
Contact Plating: 30µin. select gold over 50µin. select nickel standard; tin-lead on solder tails
Mounting Hardware Plating: Tin-lead

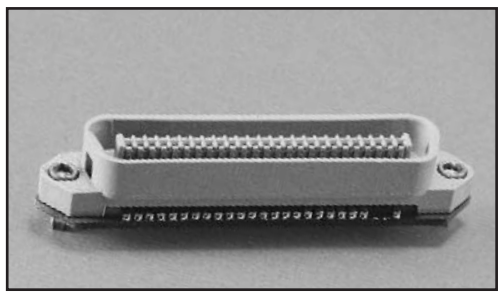

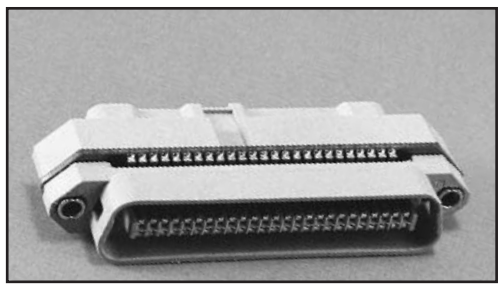

Environmental

Operating Temperature: -50°C to +105°C
Shock: 50G Peak, per EIA Std. RS364, TP27, Condition A
Vibration: 3 cycles @ 10-55Hz in each of 3 axes per EIA Std. 364, TP28, Condition A
Moisture Resistance: Per EIA Std. RS364, TP31, Condition B, with Step 7B excluded

Electrical

Voltage Rating: 500VDC @ sea level
Contact Rating: 3 Amps
RF Current Rating: 0.3 Amps
Leakage Current: 10mA maximum per contact when subjected to 1000 VAC test voltage, applied over 30 seconds and held for 60 seconds per FCC Part 68.5
Voltage Surge: Withstands 1,500V peak longitudinal voltage surge with 10µsec. risetime, 160µsec. decay
Contact Resistance: 6 milliohms maximum, per EIA Std. RS364, TP6
Insulation Resistance: 5000 Megohms minimum
Dissipation Factor: 5% maximum @ 25°C, 1kHz and 1 VAC RMS maximum

Insertion Loss:

Capacitance @ 25°C, 1kHz, 1 VAC RMS max.	Insertion Loss, min. (dB, @ 25°C, @ 50 ohm, no load, per MIL-STD-220) 10MHz	30MHz	50MHz	70MHz	100MHz	500MHz	1GHz
50pF±15%	-	-	-	-	2	14	11
100pF±15%	-	-	-	-	3	14	11
220pF±15%	-	-	4	7	12	14	11
470pF±15%	-	5	11	14	20	14	11
820pF±15%	3	3	16	20	20	14	11
1,000pF±15%	3	3	16	20	20	14	11
1,200pF±15%	3	3	16	20	20	14	11

Mechanical

Durability: 200 mating/unmating cycles

Mating / Unmating Forces:

	Mating Force (max.) with InstaLatches		Unmating Force (min.) without InstaLatches	
Size	**Lb.**	**Kg**	**Lb.**	**Kg**
50	32	14.52	7	3.18

Filtered Vertical-Mount Solder Tail Plug

Vertical-mount Filtered Miniature Ribbon plugs provide filtered I/O directly from printed circuit boards, where the mating face of the connector is in a plane parallel to that of the board. Filtering keeps conducted EMI from passing between the system board and I/O cable.

The connector's filter must be grounded to the system at the mounting holes, via either top flange or through the lower standoff to a pad on the component side of the printed circuit board.

See page 6-51 for accessories such as dust covers and mounting screws that make the use of Cinch Filtered Miniature Ribbon connectors even more cost-effective in board-mount applications.

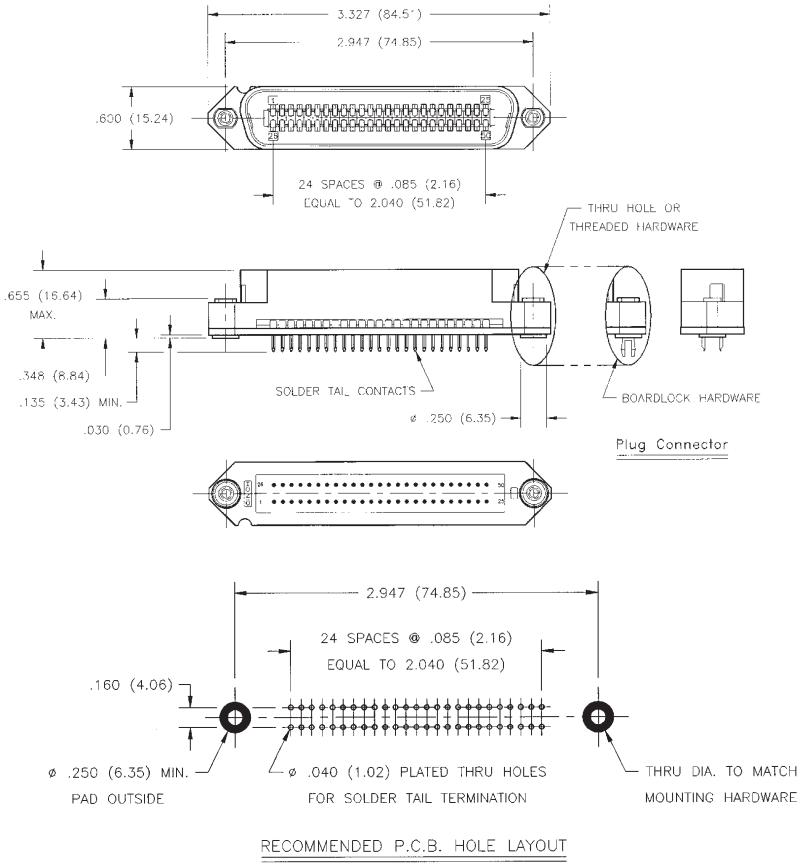

Ordering Information, Filtered Vertical-Mount Solder Tail Plug, 50 Position

	Capacitance	.144 Hole	#4-40 Hole	#6-32 Hole	M3 -0.5 Hole
Through or threader hole	50pF±15%	CF97-50PB-TH	CF97-50PB-4T	CF97-50PB-6T	CF97-50PB-3T
	100pF±15%	CF97-50PC-TH	CF97-50PC-4T	CF97-50PC-6T	CF97-50PC-3T
	220pF±15%	CF97-50PD-TH	CF97-50PD-4T	CF97-50PD-6T	CF97-50PD-3T
	470pF±15%	CF97-50PE-TH	CF97-50PE-4T	CF97-50PE-6T	CF97-50PE-3T
	820pF±15%	CF97-50PF-TH	CF97-50PF-4T	CF97-50PF-6T	CF97-50PF-3T
	1,000pF±15%	CF97-50PH-TH	CF97-50PH-4T	CF97-50PH-6T	CF97-50PH-3T
	1,200pF±15%	CF97-50PJ-TH	CF97-50PJ-4T	CF97-50PJ-6T	CF97-50PJ-3T
Threaded Boardlock	50pF±15%	-	CF97-50PB-4B	CF97-50PB-6B	CF97-50PB-3B
	100pF±15%	-	CF97-50PC-4B	CF97-50PC-6B	CF97-50PC-3B
	220pF±15%	-	CF97-50PD-4B	CF97-50PD-6B	CF97-50PD-3B
	470pF±15%	-	CF97-50PE-4B	CF97-50PE-6B	CF97-50PE-3B
	820pF±15%	-	CF97-50PF-4B	CF97-50PF-6B	CF97-50PF-3B
	1,000pF±15%	-	CF97-50PH-4B	CF97-50PH-6B	CF97-50PH-3B
	1,200pF±15%	-	CF97-50PJ-4B	CF97-50PJ-6B	CF97-50PJ-3B

Filtered Panel Mount Feedthrough Adapter

Filtered Ribbon Panel Mount Adapters provide filtered I/O in systems where internal cabling carries signals to the system panel.

By filtering right at the panel, EMI that could otherwise be generated over the length of the internal cable is prevented. The use of a plug/socket adapter also yields a benefit in serviceability. Should it ever be necessary to replace the filter, an adapter can be readily replaced without replacing a bulky, more expensive cable assembly.

The adapter must be grounded to the system panel through the mounting hardware, which extends to both plug and socket flanges; thus, the adapter may be mounted with either side to the panel.

Adapters are also available without filter capacitors. Often referred to as “connector savers”, these devices are most useful as “throw away” intermediate interconnects in applications where numerous mating/unmating cycles are required.

See page 6-51 for accessories such as bent bail latches, dust covers, and mounting screws that make the use of Cinch Miniature Ribbon Filtered Adapters even more cost-effective in panel mount-applications.

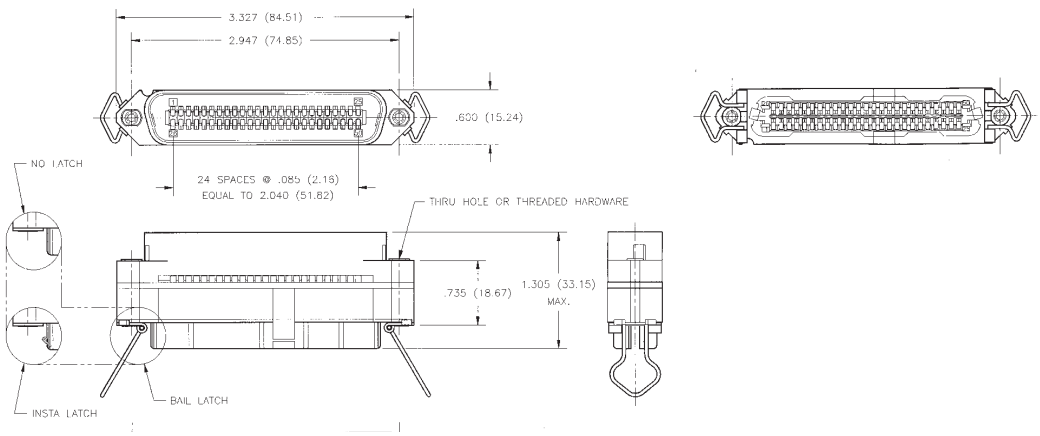

Ordering Information, Filtered Adapter, 50 position

	Capacitance	#4-40 Hole	#6-32 Hole	M3 -0.5 Hole
Socket without latches	None (Connector Saver)	CF97-50AA-4T	CF97-50AA-6T	CF97-50AA-3T
	50pF±15%	CF97-50AB-4T	CF97-50AB-6T	CF97-50AB-3T
	100pF±15%	CF97-50AC-4T	CF97-50AC-6T	CF97-50AC-3T
	220pF±15%	CF97-50AD-4T	CF97-50AD-6T	CF97-50AD-3T
	470pF±15%	CF97-50AE-4T	CF97-50AE-6T	CF97-50AE-3T
	820pF±15%	CF97-50AF-4T	CF97-50AF-6T	CF97-50AF-3T
	1,000pF±15%	CF97-50AH-4T	CF97-50AH-6T	CF97-50AH-3T
	1,200pF±15%	CF97-50AJ-4T	CF97-50AJ-6T	CF97-50AJ-3T
Socket with InstaLatches	None (Connector Saver)	CF97-50AA-4TI	CF97-50AA-6TI	CF97-50AA-3TI
	50pF±15%	CF97-50AB-4TI	CF97-50AB-6TI	CF97-50AB-3TI
	100pF±15%	CF97-50AC-4TI	CF97-50AC-6TI	CF97-50AC-3TI
	220pF±15%	CF97-50AD-4TI	CF97-50AD-6TI	CF97-50AD-3TI
	470pF±15%	CF97-50AE-4TI	CF97-50AE-6TI	CF97-50AE-3TI
	820pF±15%	CF97-50AF-4TI	CF97-50AF-6TI	CF97-50AF-3TI
	1,000pF±15%	CF97-50AH-4TI	CF97-50AH-6TI	CF97-50AH-3TI
	1,200pF±15%	CF97-50AJ-4TI	CF97-50AJ-6TI	CF97-50AJ-3TI
Socket with Bail latches	None (Connector Saver)	CF97-50AA-4TB	CF97-50AA-6TB	CF97-50AA-3TB
	50pF±15%	CF97-50AB-4TB	CF97-50AB-6TB	CF97-50AB-3TB
	100pF±15%	CF97-50AC-4TB	CF97-50AC-6TB	CF97-50AC-3TB
	220pF±15%	CF97-50AD-4TB	CF97-50AD-6TB	CF97-50AD-3TB
	470pF±15%	CF97-50AE-4TB	CF97-50AE-6TB	CF97-50AE-3TB
	820pF±15%	CF97-50AF-4TB	CF97-50AF-6TB	CF97-50AF-3TB
	1,000pF±15%	CF97-50AH-4TB	CF97-50AH-6TB	CF97-50AH-3TB
	1,200pF±15%	CF97-50AJ-4TB	CF97-50AJ-6TB	CF97-50AJ-3TB

The following accessories are available to make your application using Cinch Miniature Ribbon and SUPERIBBON products as complete and cost-effective as possible.

Dust Covers for all Metal Shell and All-Plastic Miniature Ribbon Connectors

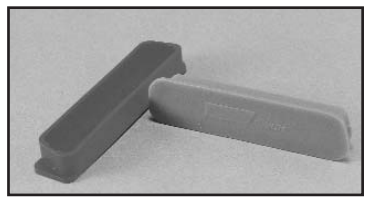

Dust covers may be added to Miniature Ribbon or SUPERIBBON assemblies to protect the mating area from damage or contamination when the connector is left unmated. They can be useful for protection from handling damage during assembly, or can be left on the connector for protection of unused system I/O ports.

Compliant-pin Miniature Ribbon products come with special seating fixtures that must be used to install the connectors onto the printed circuit board. These may be replaced after insertion; however, with standard dust covers to maintain the standard color code, if so desired. Material: UL94V-0 rated polyethelene (blue for plug covers; red for socket covers)

Ordering Information, Dust Covers

Size	Plug Cover	Socket Cover
14	57-1001	57-1002
24	57-1003	57-1004
36	57-1005	57-1006
50	57-1008	57-1022
64	57-1009	57-1010

Bent Bail Latch for End-Entry Applications

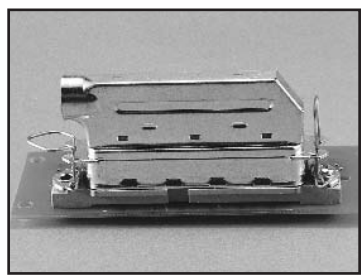

Standard Bail Latches will not lock under a plug cable in a typical end-entry application. This latch, which is bent at a 90° angle, may be used to replace a standard latch in this situation.

Material: Stainless Steel

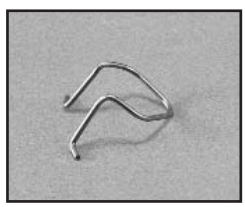

Ordering Information, Bent Bail Latch

Part No. 57-BL-90

Mounting Screws and Related Hardware

Many Cinch Miniature Ribbon and SUPERIBBON products include all the hardware required for the most common application for the product; however, these alternatives may be desirable to better fit product to a specific use.

Part No.	Description	Typical Applications
4-40UNC2AX11/32	#4-40 x .343 Pan Head Screw	• SUPERIBBON to mate with female screwlock • PC Mount connector to PCB (secured from rear)
4-40UNC2AX17/32	#4-40 x .525 Pan Head Screw	• SUPERIBBON to threaded panel
4-40UNC2AX5/8	#4-40 x .625 Fillister Head Screw	• Metal Shell Running Cable (included on standard end-entry metal shell products)
4-40UNC2AX3/4	#4-40 x .750 Pan Head Screw	• SUPERIBBON Running Cable (included on standard end-entry SUPERIBBON products) • SUPERIBBON to front-panel mounted SUPERIBBON held by panel clips
4-40UNC2AX7/8	#4-40 x .875	• Miscellaneous
4-40X1/4SPCR	Hex Spacer, #4-40 Internal Thread x .250	• Female Screwlock

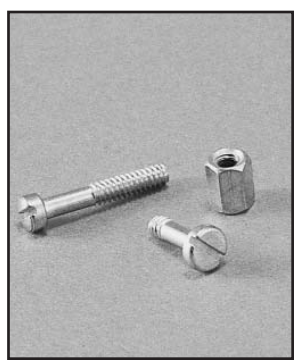

Wire Restraints for Panel-Mount SUPERIBBON™ All-Plastic Connectors

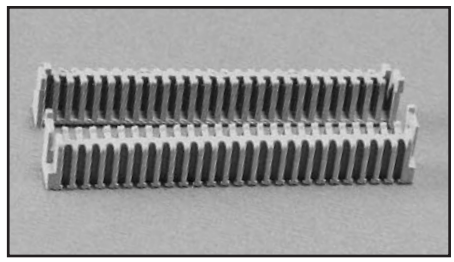

Wire restraints provide added security to terminated wires, preventing radial pullout. They are intended for use on panel mounted connectors where hoods are not required (wire restraints cannot be applied simultaneously with hoods), and snap on after connector termination.

Material: Gray UL94V-0 rated polyester.

Ordering Information, SUPERIBBON Wire Restraints

(Two restraints required per connector)

Size	Plug	Socket
14	97-WR-P14	97-WR-S14
24	97-WR-P24	97-WR-S24
36	97-WR-P36	97-WR-S36
50	97-WR-P50	97-WR-S50
64	97-WR-P64	97-WR-S64

Wire Restraints for Panel-Mount Miniature Ribbon Metal Shell Connectors

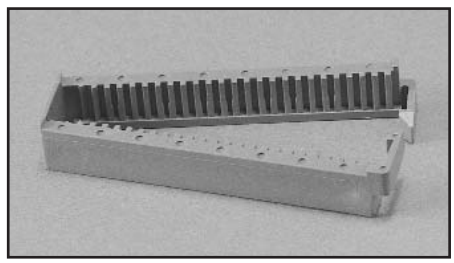

Metal Shell Wire Restraints serve the same purpose as their SUPERIBBON counterparts, but are for IDC terminated metal shell connectors. These one-piece restraints snap in place around the termination area after assembly.

Material: Blue UL94V-0 rated polyester.

Ordering Information, Miniature Ribbon Wire Restraints

(One restraint required per connector)

Size	Plug or Socket
36	77-WR-36
50	77-WR-50

Panel Mounting Clips for All-Plastic Miniature Ribbon Connectors

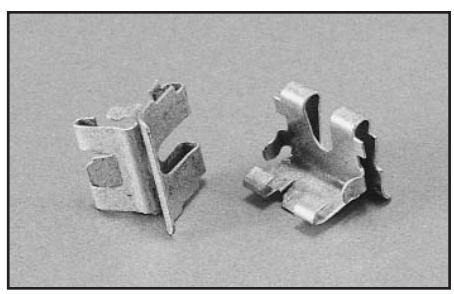

These clips slip into each end of a modified panel cutout, and allow all-plastic Miniature Ribbon connectors to be snapped into place and securely front-mounted to the panel with no additional hardware. Threaded holes are not required in the panel, and connectors can be loaded without needing access to the rear of the panel.

Material: Steel
Finish: Tin-cadmium/clear chromate

6

Ordering Information, Panel Mounting Clips

(Two clips required per connector)

Chassis Thickness	Panel Clip Part Number
.062" (1.57mm)	97-MC-062
.093" (2.36mm)	97-MC-093
.125" (3.18mm)	97-MC-125

Dimensions

	B		K	
Size	in	mm	in	mm
14	1.417	35.99	1.060	26.92
24	1.842	46.79	1.485	37.72
36	2.352	59.74	1.995	50.67
50	2.947	74.85	2.590	65.79
64	3.542	89.97	3.185	80.90

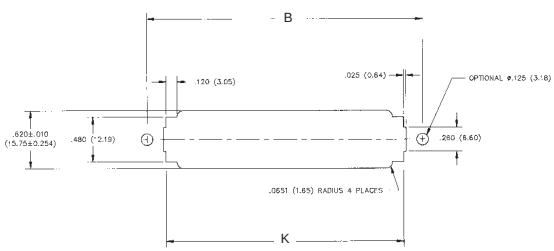

RECOMMENDED PANEL CUTOUT FOR FRONT MOUNT WITH WIRE RESTRAINTS OR PANEL CLIPS

Wire Restraint with Integral Panel Clip

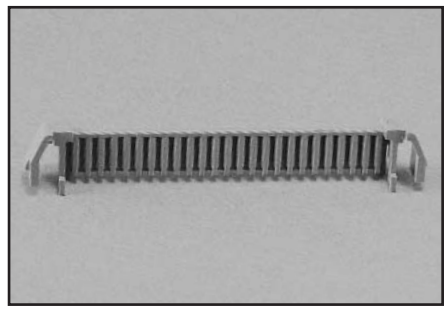

This accessory for All-Plastic Miniature Ribbon products combines the Wire Restraint and Panel Mounting Clip into one molded device. Available only for 50 position size connectors, it provides a significant material and labor cost savings compared to alternate mounting methods.

Material: Gray UL94V-0 rated polyester.

Ordering Information, Wire Restraint with Integral Panel Clip
(Two required per connector)

Chassis Thickness	Panel Clip Part Number
.062" (1.57mm)	97-WRC-062
.093" (2.36mm)	97-WRC-093

Hoods for SUPERIBBON Connectors

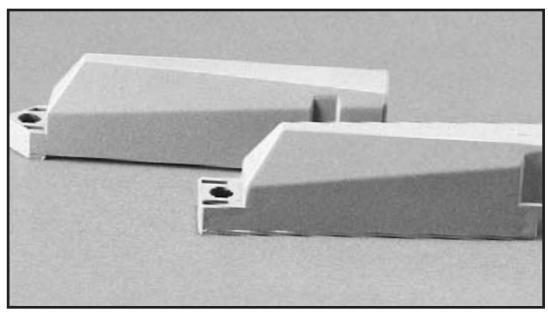

180° (Top-Entry) Hoods can be used with panel-mount All-Plastic SUPERIBBON connectors to provide strain relief and protection of the wire terminations. The two-piece snap-on assembly has adjustable tabs that allow effective strain relief on a wide range of cable sizes.

90°/270° (End-Entry) Hoods are for replacement on End-Entry SUPERIBBON connectors. They are available for all sizes, as well as for the pointed-nose 50 position size. *Note: End-Entry Hoods cannot be added to panel-mount connectors because the finished assembly would not have the end-entry cable grip. See pages 6-10 thru 6-13 for complete end-entry connectors.*

Material: Gray UL94V-0 rated polyester.

Ordering Information, Hoods for All-Plastic Miniature Ribbon

	Size	180° (Top-Entry)	90°/270° (End-Entry)
Square Nose	14	97-14-180	97-14-90
	24	97-24-180	97-24-90
	36	97-36-180	97-36-90
	50	97-50-180	97-50-90
	64	97-64-180	97-64-90
Pointed Nose	50	-	97-50-90P

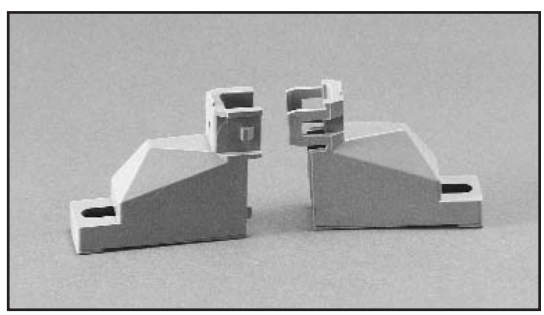

A full range of tooling is available to make the use of Cinch Miniature Ribbon and SUPERIBBON™ products as cost-effective as possible. From hand repair tools to the high production rate Auto-Clinch™ termination tool, Cinch has the tool to fit your needs.

Auto-Clinch Model 200S Termination Tool

Auto-Clinch is a semi-automatic Connector Termination Machine that terminates IDC connectors pair-by-pair. The basic machine comes equipped ready to terminate 50-position end-entry Miniature Ribbon or SUPERIBBON connectors, which it can do in approximately 1.5 minutes.

The Auto-Clinch is pneumatically powered and requires a min. 60psi air supply. It is electrically controlled, and requires a 117V, 60Hz Single Phase electrical circuit (5 Amps). Weight: 120 lbs. (54.48kg.), Dimensions: 25.5" (64.77cm.) wide; 20" (50.8cm) deep; 9" (22.86cm) high. *Note: These specifications may change with the addition of certain options.*

Order Part No. AC-371

Several options are available that make the Auto-Clinch a versatile application tool:

- Remote Visual Color Display shows wire color codes. It can be used to train new operators or to assist the operator in terminating non-standard wire sequences. **Part No. ACO-482**
- The Selective Programmer allows the operator to set the machine to skip over positions that are not to be terminated, thus speeding up the termination process. **Part No. ACO-495**
- The End-Entry Cable Clamp closer automatically closes the cable clamp on end-entry SUPERIBBON or SuperShield connectors as they are terminated. **Part No. ACO-374**
  A power assist for this device is also available. **Part No. ACO-405**
- The Top-Entry Adapter dresses the wires during termination such that they are properly aligned for exit through a Top-Entry hood. **Part No. ACO-218**
  NOTE: Auto-Clinch™ cannot be equipped with both Cable Clamp Closer and Top-Entry Adapter simultaneously.
- Insertion Blades are included for terminating solid wire. For replacement, order **Part No. ACB-443**
  To terminate stranded wire, order stranded-wire blades, **Part No. ACB-872**
- Nests for Panel Mount and Top-Entry Ribbon Connectors, and All Plastic SUPERIBBON connectors allow the use of Auto-Clinch to terminate other IDC Ribbon Connectors:

	For All-Plastic IDC Connectors		For Metal-Shell IDC Connectors			
Connector				Panel Mount/Top-Entry		Top-Entry Plug
Size	End-Entry	Top-Entry	End-Entry	Sockets	Plugs	With Hood*
14	ACEN-850	ACTN-568	-	ACMN-231	-	ACMN-232
24	ACEN-851	ACTN-569	-	ACMN-229	-	ACMN-230
36	ACEN-852	ACTN-797	-	ACMN-228	ACMN-203	ACMN-227
50	ACEN-853	ACTN-798	ACMN-484	ACMN-527	ACMN-858	ACMN-526
64	ACEN-570	ACTN-799	-	-	-	-

* For Bail-Latch plugs with hood where hood forms rear of connector body, i.e., 77-32500.
For overmold kits, use panel mount/top-entry plug nests.

AutoClinch is a trademark of Cinch Connector Division of Labinal Components & Systems, Inc.

Certi-Clinch™ Portable Termination Tool

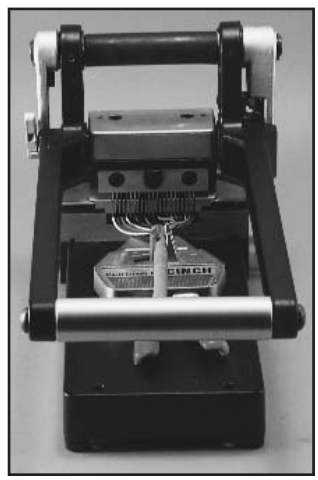

Certi-Clinch is a portable, manually operated tool that terminates Cinch all-plastic and metal shell Miniature Ribbon connectors with discrete-wire IDC contacts. It is designed for field use assembling cables on-site, yet is efficient enough to fit well into lower-volume factory assembly operations.

Its 10.5 lb. (4.77Kg) weight and versatile configuration make it readily portable for field use, and allow temporary use with virtually no setup time to handle peak demands in factory environments. A leather case is available for carrying Certi-Clinch onto a job site or for storing Certi-Clinch in the factory when not being used.

Certi-Clinch measures 6" (15.24cm) wide x 13" (33.02cm) long x 6.5" (16.5cm) high.

Ordering Information, Certi-Clinch

Model	Description
SCT-330	Certi-Clinch Tool with 25-pair nest, for Solid Wire
SCT-335	Certi-Clinch Tool with 32-pair nest, for Solid Wire
SCT-360	Certi-Clinch Tool with 25-pair nest, for Stranded Wire
SCT-342	Kit to convert 25-pair tool to 32-pair operation
SCT-343	Kit to convert 32-pair tool to 25-pair operation
SCT-645	Insertion Blades to convert 25-pair tool to Stranded Wire
SCT-038	Insertion Blades to convert 32-pair tool to Stranded Wire
SCT-649	Carrying Case for all Certi-Clinch Tools

Handi-Clinch™ Hand Termination Tool

This hand-operated tool terminates wires individually to Cinch SUPERIBBON™ and metal shell Miniature Ribbon IDC connectors. Its integral nest holds the connector in place during use. **Part No. HCTT-539**

Versa-Clinch™ Multi-Function Hand Tool

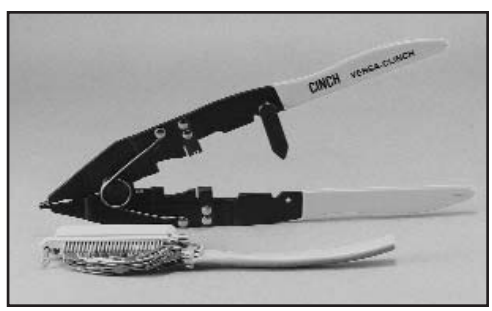

This versatile tool performs four basic functions in applying Cinch SUPERIBBON and metal shell Miniature Ribbon products:

- Terminate individual wires to the IDC contact
- Unlatch the hood for removal on end-entry SUPERIBBON products
- Open and close the cable clamp on SUPERIBBON and SuperShield
- Unlock InstaLatches to unmate connectors

  Part No. VCTT-361

Termination Repair Pliers

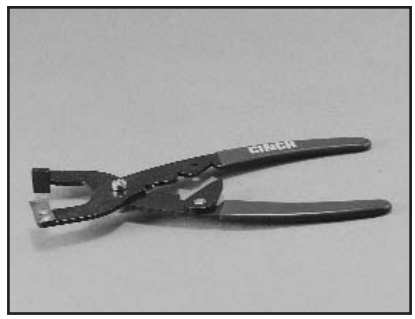

These plier type tools allow you to rework misterminated cable assemblies and/or perform specialized termination operations. They terminate wires individually into Cinch IDC contacts. Repair Pliers for Standard Termination: **Part No. SRT-345**

Repair Pliers for Half-Tap (Daisy-Chaining) allows you to terminate one wire to multiple contacts to short contacts together, or even to two separate connectors to make back/back connections, etc. **Part No. HT-560**

InstaLatch™ Unlatching Tool

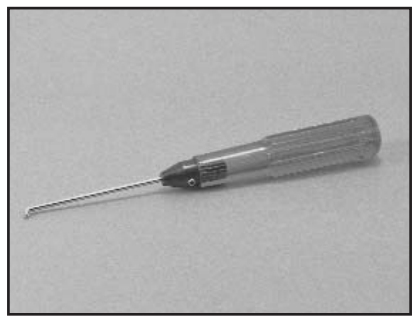

While InstaLatches may be unlocked with something as simple as a center punch or ballpoint pen, this tool provides a “hooked” end that allows you to unlock InstaLatches even in tight areas. **Part No. UT-304**

Crimping Tools for Overmold Kit Ferrules

Two model tools are available to crimp ferrules onto overmold kits:

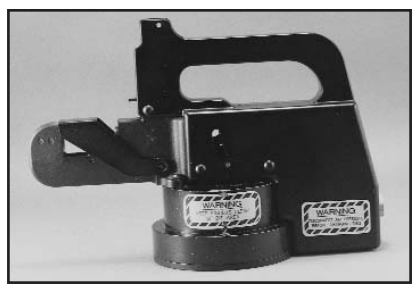

- Pneumatically powered bench-top press, which is portable so it can be placed in storage when not required. **Part No. FCT-551**
- Hand-operated crimping tool, satisfactory for lower-volume applications. **Part No. FCT-552**

Both tools use the same crimp dies. Select the crimp die(s) below for the particular ferrule being used (ferrules shown on page 6-22).
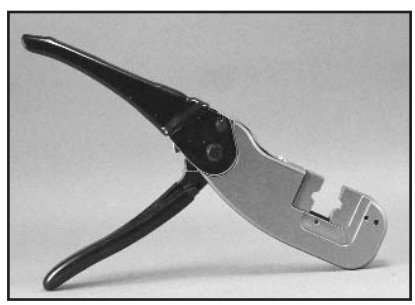
Crimp Die Part No.	Crimp Ferrule Part No.
CD08	CF57
CD09	CF60
CD10	CF64