Issue No. : **EA-04-11-05-03S**
Date of Issue : **05th. November, 2004**
Classification : ■New ☐Changed ☐Revised

PRODUCT SPECIFICATION

Product Description	:	Aluminium Electrolytic Capacitor
Product Part Number	:	**A TYPE M SERIES**
Country of Origin	:	Malaysia / Japan
Marking of the Origin	:	Printed on the packaging label
Classification of Spec.	:	Product specification
Applications	:	**Set Top Box**
		For other application, contact our person signed below.
Term of Validity	:	**04th. November, 2009 from the date of issue**

CUSTOMER USE ONLY	Receipt Record # :
This was certainly received by us. One copy is being returned to the manufacturer within 2 months from the date of issue. If not, it shall be considered as accepted.	Date of Receipt
	Received by :

- This capacitor is designed to be used for electronics circuits of, such as, audio/visual equipment, home appliances, computers and other office equipment, optical equipment, measuring equipment and industrial robots.
- No Ozone Depleting Chemicals (ODC's), controlled under the Montreal Protocol Agreement, are used in producing this product.
- This product does not contain PBBOs or PBBs.
- All the materials that are used for this product are registered as "Known Chemicals" in the Japanese act "Law Concerning the Examination and Regulation of Manufacture, etc. of Chemical Substances".
- This product is not subject to the control under Foreign Exchange and Foreign Trade Control Law of Japan as one of the strategic products.

Matsushita Electronic Devices (M) Sdn. Bhd.
No.1 Jalan Jemuju 16/13, 40000 Shah Alam,
Selangor Darul Ehsan, MALAYSIA.
(P.O. Box 7720, Pejabat Pos Besar Shah Alam,
40724 Shah Alam, Selangor Darul Ehsan.)

Prepared by: Customer Engineering, R&D Center		
Approved	Checked	Prepared
YAMADA	**S.C.LEE**	**H.L.LEE**

Contents

- Scope Page 1
- Part number Page 1
- Can size Page 2 ~ 3
- Standard rating Page 4
- Dimensions and appearance Page 4
- Constructions Page 5
- Performance characteristics Page 6 ~ 9
- Marking Page 10
- Other specifications Page 10
- Part number list Page 11 ~ 15
- Dimensions (Snap-in lead formed type) Page 16
- Taping shape and dimensions Page 17 ~ 20
- Taping specification Page 21 ~ 24
- Application guidelines Page 25 ~ 28

Remark

1.0 Scope

This specification applies to Aluminium Electrolyte Capacitors for electronic equipment use which conform to JIS C 5141.

2.0 Part number

EC	A	○○	M	○○○	□□
2-1	2-2	2-3	2-4	2-5	2-6

2-1 Aluminium Electrolytic Capacitor

2-2 Type : Radial lead type (JIS:04 type)

2-3 Rated voltage code

Voltage code	0J	1A	1C	1E	1V	1H	1J	2A
Rated voltage	6.3	10	16	25	35	50	63	100

Voltage code	2C	2D	2E	2V	2G	2W
Rated voltage	160	200	250	350	400	450

2-4 M series

2-5 Capacitance code : Capacitance value in μF is indicated by 3 figures.
The first two figures denote the first two figures of the capacitance value.
The third figure denotes the number of subsequent zeros of the capacitance value.
"R" denotes the decimal point.
Ex : 0.1μF → 0R1, 10μF → 100, 1000μF → 102

2-6 Suffix code for appearance

Blank	Standard long lead
E	Snap-in lead
I	Lead taping (2.5mm pitch)
B	Lead taping (5.0mm / 7.5mm pitch)

Refer to page 16 for snap-in lead dimensions, page 17 ~ 20 for lead taping dimensions, and page 21 ~ 24 for lead taping specifications.

Remark

Can size

ΦD x L [mm]

W.V. (V. DC) / Cap (μF)	6.3	10	16	25	35	50	63	100
0.1						5x11		
0.22						5x11		
0.33						5x11		
0.47						5x11		5x11
0.68						5x11		
1						5x11	5x11	5x11
2.2						5x11	5x11	5x11
3.3						5x11		5x11
4.7						5x11	5x11	5x11
6.8						5x11		
10			5x11	5x11	5x11	5x11	5x11	5x11
22			5x11	5x11	5x11	5x11	5x11	6.3x11.2
33	5x11		5x11	5x11	5x11	5x11	6.3x11.2	8x11.5
47	5x11		5x11	5x11	5x11	6.3x11.2	6.3x11.2	8x11.5
68			5x11					
100	5x11	5x11	5x11	6.3x11.2	6.3x11.2	8x11.5	8x11.5 10x12.5 S	10x16
220	5x11	6.3x11.2 5x11 U	6.3x11.2	8x11.5	8x11.5	10x12.5	10x16	12.5x20
330	6.3x11.2	6.3x11.2	8x11.5	8x11.5	10x12.5	10x16	10x20	12.5x25
470	6.3x11.2	8x11.5 6.3x11.2 U	8x11.5	10x12.5	10x16	10x20	12.5x20	16x25
1000	8x11.5	10x12.5	10x16 8x20 L 10x12 U	10x20 10x16 U	12.5x20 10x20 U	12.5x25	16x25	18x35.5
2200	10x16	10x20 10x16 U	12.5x20	12.5x25	16x25	16x31.5	18x35.5	
3300	10x20	12.5x20	12.5x25	16x25	16x31.5	18x35.5		
3900			16x20 U	16x25				
4700	12.5x20	12.5x25	16x25	16x31.5 18x25 S	18x35.5			
5600					18x35.5			
6800	12.5x25	16x25	16x31.5	18x35.5				
8200				18x35.5				
10000	16x25	16x31.5	18x35.5					
15000	16x31.5	18x35.5						
22000	18x35.5							

Remark

160V ~ 450V ΦD x L [mm]

W.V. (V. DC) / Cap (μF)	160	200	250	350	400	450
0.47	5x11		5x11			
1	6.3x11.2	6.3x11.2	6.3x11.2	6.3x11.2	6.3x11.2	8x11.5
2.2	6.3x11.2	6.3x11.2	6.3x11.2	8x11.5	8x11.5	10x12.5
3.3	6.3x11.2	6.3x11.2	8x11.5	8x11.5	10x12.5	10x16
4.7	6.3x11.2	8x11.5	8x11.5	10x12.5	10x16	10x20
6.8	8x11.5				10x16	
10	10x12.5	10x12.5	10x16	10x20	10x20	12.5x20
22	10x16	10x20 10x16 U	10x20	12.5x20	12.5x25	16x25
33	10x20	10x20	12.5x20	16x25	16x25	16x31.5
47	12.5x20	12.5x20	12.5x25	16x25	16x31.5	
68					16x31.5 U	
82		16x25			18x35.5	
100	12.5x25	16x25 18x20 S	16x31.5		18x40	
150		16x31.5				
220	16x31.5	16x31.5 U	18x40			
330		18x40 18 x 35.5 U				
470	18x40					

Remark

3.0 Standard ratings

No	Item		Ratings							
1	Operating temperature range		-40 ~ +85 °C				-25 ~ +85 °C			
2	Rated working voltage range		6.3 ~ 100 V D.C.				160 ~ 450 V D.C.			
3	Nominal capacitance range		0.1 ~ 22000 μF (120Hz 20°C)				0.47 ~ 470 μF (120Hz 20°C)			
4	Capacitance tolerance		± 20 % (120Hz 20°C)							
5	Surge voltage (V D.C.)	W.V	6.3	10	16	25	35	50	63	100
		S.V	8	13	20	32	44	63	79	125
		W.V	160	200	250	350	400	450		
		S.V	200	250	300	400	450	500		
6	Permissible ripple current		Page 11 ~ 15							

4.0 Dimension and appearance

- Vinyl sleeve colour (dark blue), product marking (white)
- Standard long lead (Suffix : blank) :-

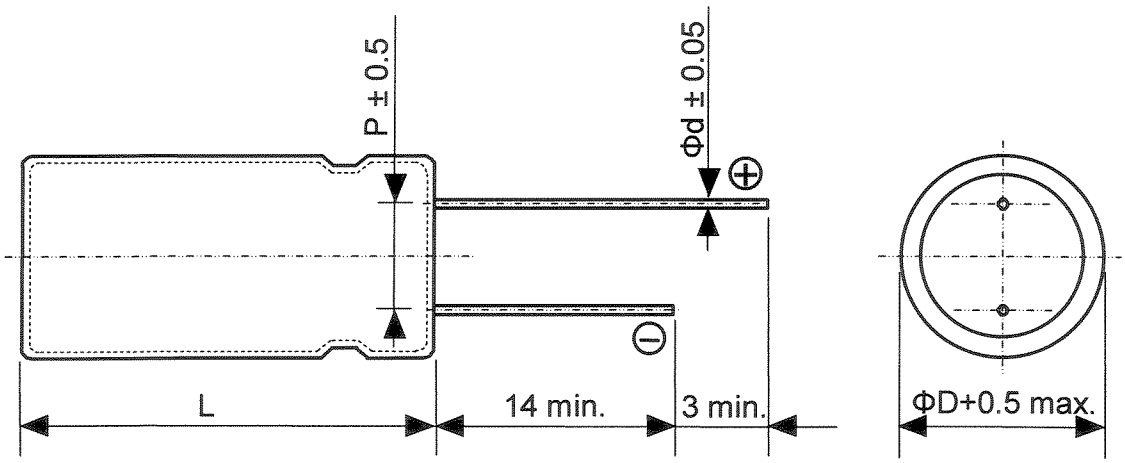

L ≤ 16 : L + 1.0 max.

L ≥ 20 : L + 2.0 max. [unit : mm]

Body diameter, ΦD	5	6.3	8	10	12.5	16	18
Lead pitch, P	2.0	2.5	3.5	5.0	5.0	7.5	7.5
Lead diameter, Φd	0.5	0.5	0.6	0.6	0.6	0.8	0.8

Remark

5.0 Constructions

5-1 Inside construction :-

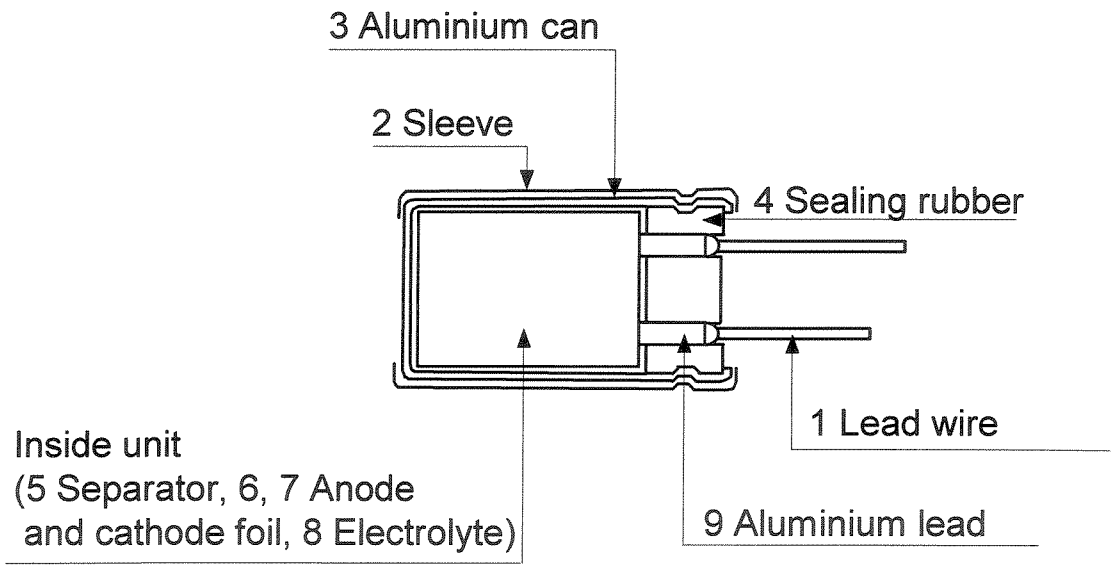

5-2 Construction parts :-

No.	Parts	Materials		Parts	Materials
1	Lead wire	Solid tinned copper welded steel wire	5	Separator	Manila hemp / Kraft paper
			6	Anode foil	High purity aluminium foil
2	Sleeve	Polyethylene terephthalate	7	Cathode foil	Aluminium foil
3	Aluminium can	Aluminium	8	Electrolyte	Ethylene Glycol
4	Rubber packing	Synthetic rubber	9	Aluminium lead wire	Aluminium

Remark

6.0 Performance Characteristics

No	Item	Performance Characteristics	Test
1	Leakage current	6.3V~100V : I ≤ 0.01CV or 3μA whichever is greater. 160V~450V : I ≤ 0.06CV+10μA I : Leakage current C : Capacitance V : Rated voltage	Series resistor : 1000 ± 10 Ω Applied voltage : Rated working voltage Measuring : After 2 minutes
2	Capacitance	Within the specified capacitance tolerance	Measuring frequency : 120 Hz ± 20% Measuring circuit : Equivalent series circuit Measuring voltage : +1.5~2 V D.C. (≤ 0.5V for A.C.)
3	tan δ	Less than the values in Table 1 of Page 10 Add 0.02 per 1000μF for products which capacitance value is above 1000μF.	Measuring frequency : 120 Hz ± 20% Measuring circuit : Equivalent series circuit Measuring voltage : +1.5~2 V D.C. (≤ 0.5V for A.C.)
4	Temperature characteristics	Step 2: Impedance ratio : Less than values in Table 2 of Page 10. Step 4: Leakage current : ≤ 500% of value of Item 6.1 Capacitance change : Within ±25% of value in Step 1 tan δ ≤ the value of Item 6.3	Step / Test temperature / Time: 1: 20 ± 2°C, - 2: ■, -* 3: 20 ± 2°C, 15 minutes 4: 85 ± 2°C, 2 hours 5: 20 ± 2°C, -* Impedance shall be measured at frequency of 120 Hz ± 10% ■ 6.3V ~ 100V : -25 ± 3 °C, -40 ± 3 °C 160V ~ 450V : -25 ± 3 °C * The capacitor should be stored at the impedance or capacitance are stabilized.
5	Surge voltage	Leakage current : ≤ the value of Item 6.1 Capacitance change : Within ±15% of initial measured value tan δ ≤ the value of Item 6.3 Appearance : No significant change can be observed.	Test temperature : 15 ~ 35°C Series resistor : R = 100 ± 50 / C R : protective resistor (kΩ) C : nominal capacitance (μF) Test voltage : Item 3.5 No. of cycles : 1000 cycles Each cycle lasts for 6 ± 0.5 min. "ON" for 30 ± 5 s "OFF" for 5 ± 0.5 min.

Remark

No	Item	Performance Characteristics	Test
6	Lead terminal	There is no damage or breakage after test	<u>Lead pull strength</u> Diameter [mm] / Pull strength [N] Φ0.50 / 5 Φ0.60 ~ Φ0.80 / 10 Pull strength is applied axially for 10 ± 1 seconds. <u>Lead bending strength</u> Diameter [mm] / Static load [N] Φ0.50 / 2.5 Φ0.60 ~ Φ0.80 / 5.0 The capacitor is placed in a vertical position. The weight specified in the above table is applied to one lead. The capacitor is slowly rotated 90° to horizontal position and then return to vertical position. The bendings shall last for 2~3 seconds. Additional bends shall be made in the opposite direction.
7	Resistance to vibration	Capacitance : During the test, measured value shall be stabilized. (Measure several times within 30 mins before completion of test. The value shall be monitored from and to both ends of the frequency values. Appearance : No significant change can be observed. Capacitance change : Within ±5% of initial value.	Frequency : 10~55 Hz (1 minute per cycle) Vibration distance : 1.5 mm Direction and duration of vibration : It is done in the X,Y,Z axis direction for 2 hours each, with a total of 6 hours. Mounting methods : The capacitor shall be fixed with its lead wires at the point of 4mm from the bottom of capacitor body. Capacitor greater than 12.5mm diameter or longer than 25mm must be fixed in place with a bracket.
8	Solderability	More than 3/4 of the terminal surface shall be covered with new solder.	Solder : H60A, H60S, or H63A Solder temperature : 235 ± 5°C Immersing time : 2 ± 0.5 s Immersing depth : 1.5 ~ 2.0 mm Flux : Approx. 25% resin (JIS K5902) in ETHANOL (JIS K1501)
9	Resistance to soldering heat	Leakage current : ≤ the value of Item 6.1 Capacitance change : Within ± 10% of initial measured value tan δ : ≤ the value of Item 6.3 Appearance : No significant change can be observed.	Solder : H60A, H60S, or H63A Solder temperature : 260 ± 5°C Immersing time : 10 ± 1 s Immersing depth : 1.5~2.0 mm

Remark

No	Item	Performance Characteristics	Test
10	Permanency of marking	There shall be no damage and legible marked. Marking shall be deciphered easily.	Class of reagent : ISOPROPYL ALCOHOL (JIS K8034) or superior Test temperature : 20 ~ 25°C Immersing time : 30 ± 5 s
11	Vent (for products with diameter ≥ Φ 6.3)	Vent shall operate without any hazardous expulsion or emission of flame. No emission of gas after 30 minutes application of voltage.	• AC current method : 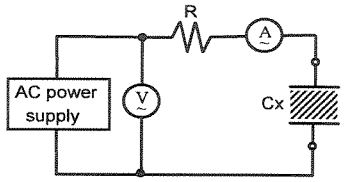 50Hz or 60Hz A : AC ammeter R : Series resistor V : AC voltmeter Cx : Tested capacitor Applied voltage : AC voltage equals to rated W.V. x 0.7 or 250V (rms) whichever is smaller.

Nominal cap. (μF)	DC resistance (Ω)
≤ 1	1000 ± 100
> 1 ≤ 10	100 ± 10
> 10 ≤ 100	10 ± 1
> 100 ≤ 1000	1 ± 0.1
> 1000 ≤ 10000	0.1 ± 0.01
> 10000	*

* When nominal capacitance is over 1000μF, the value of series resistor is half impedance of tested capacitor.

• Reverse voltage method :

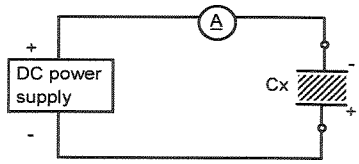

A : DC ammeter Cx : Tested capacitor

Diameter (mm)	DC (A)
≤ 22.4	1 (constant)
> 22.4	10 (constant)

Remark

No	Item	Performance Characteristics	Test
12	Moisture Resistance (Steady State)	Leakage current : ≤ the value of Item 6.1 Capacitance change : Within ± 20% of initial measured value tan δ ≤ 120% the value of Item 6.3 Appearance : No significant change can be observed.	Test temperature : 40 ± 2°C Relative humidity : 90 ~ 95% Test duration : 240 ± 8 hours After subjected to the test, the capacitor shall be left for 2 hours at room temperature and room humidity before measurement is performed.
13	Endurance	Leakage current : ≤ the value of Item 6.1 Capacitance change : Within ± 20% of initial measured value tan δ ≤ 150% the value of Item 6.3 Appearance : No significant change can be observed.	Test temperature : 85 ± 2°C Test duration : 2000^{+72}_{-0} hours Applied voltage : D.C. voltage with specified ripple current. The sum of DC and ripple peak current shall not exceed the rated working voltage. After subjected to the test, the capacitor shall be left at room temperature and room humidity for 2 hours before measurement is performed.
14	Shelf life	Leakage current : ≤ the value of Item 6.1 Capacitance change : Within ± 20% of initial measured value tan δ ≤ 150% the value of Item 6.3 Appearance : No significant change can be observed.	Test temperature : 85 ± 2°C Test duration : 1000^{+48}_{-0} hours After subjected to the test, DC working voltage shall be applied to the capacitor for 30 minutes as post-test treatment. The capacitor shall be left at room temperature and room humidity for 2 hours before measurement is performed.

Remark

7.0 Marking

Marking indicated on the products :

a) Rated working voltage
b) Nominal capacitance
c) Negative polarity
d) Manufacturer's identification
e) Maximum operating temperature
f) Series Code
g) Lot no. (or date code)

8.0 Others

Unless specified otherwise, the product shall conform to JIS C 5141.

■ Table 1 tan δ

W.V. (V D.C.)	6.3	10	16	25	35	50	63	100
tan δ	0.28	0.24	0.20	0.16	0.14	0.12	0.11	0.10

W.V. (V D.C.)	160	200	250	350	400	450
tan δ	0.16	0.18	0.18	0.20	0.20	0.20

Add 0.02 per 1000μF for product with capacitance value greater than 1000μF

■ Table 2 Temperature characteristics (Impedance ratio at 120Hz)

W.V. (V D.C.)	6.3	10	16	25	35	50	63	100
Z(-25°C)/Z(20°C)	5	4	3	2	2	2	2	2
Z(-40°C)/Z(20°C)	12	10	8	5	4	3	3	3

1. Add 0.5 per 1000μF for products more than 1000μF at -25°C
2. Add 1.0 per 1000μF for products more than 1000μF at -40°C

W.V. (V D.C.)	160	200	250	350	400	450
Z(-25°C)/Z(20°C)	2	2	3	5	6	6

■ Table 3 Frequency correction factor for ripple current

Frequency (Hz)	50, 60	120	1k	10k ~
Coefficient	0.7	1	1.3	1.7

Remark

Standard long lead type

Customer Part No	Matsushita Part No	W.V. (V D.C.)	Cap (μF)	tan δ	D.C.L. (μA)	Ripple current (mA rms.) *1	Dim. (mm)			
							ϕD	L	F	ϕd
	ECA0JM330	6.3	33	0.28	3.0	60	5	11	2.0	0.50
	ECA0JM470	6.3	47	0.28	3.0	60	5	11	2.0	0.50
	ECA0JM101	6.3	100	0.28	6.3	130	5	11	2.0	0.50
	ECA0JM221	6.3	220	0.28	13.8	240	5	11	2.0	0.50
	ECA0JM331	6.3	330	0.28	20.7	300	6.3	11.2	2.5	0.50
	ECA0JM471	6.3	470	0.28	29.6	380	6.3	11.2	2.5	0.50
	ECA0JM102	6.3	1000	0.28	63.0	580	8	11.5	3.5	0.60
	ECA0JM222	6.3	2200	0.30	138.6	890	10	16	5.0	0.60
	ECA0JM332	6.3	3300	0.32	207.9	1020	10	20	5.0	0.60
	ECA0JM472	6.3	4700	0.34	296.1	1170	12.5	20	5.0	0.60
	ECA0JM682	6.3	6800	0.38	428.4	1270	12.5	25	5.0	0.60
	ECA0JM103	6.3	10000	0.46	630.0	1450	16	25	7.5	0.80
	ECA0JM153	6.3	15000	0.56	945.0	1700	16	31.5	7.5	0.80
	ECA0JM223	6.3	22000	0.70	1386.0	1900	18	35.5	7.5	0.80
	ECA1AM101	10	100	0.24	10.0	150	5	11	2.0	0.50
	ECA1AM221	10	220	0.24	22.0	250	6.3	11.2	2.5	0.50
	ECA1AM221U	10	220	0.24	22.0	240	5	11	2.0	0.50
	ECA1AM331	10	330	0.24	33.0	330	6.3	11.2	2.5	0.50
	ECA1AM471	10	470	0.24	47.0	400	8	11.5	3.5	0.60
	ECA1AM471U	10	470	0.24	47.0	350	6.3	11.2	2.5	0.50
	ECA1AM102	10	1000	0.24	100.0	630	10	12.5	5.0	0.60
	ECA1AM222	10	2200	0.26	220.0	920	10	20	5.0	0.60
	ECA1AM222U	10	2200	0.26	220.0	920	10	16	5.0	0.60
	ECA1AM332	10	3300	0.28	330.0	1090	12.5	20	5.0	0.60
	ECA1AM472	10	4700	0.30	470.0	1200	12.5	25	5.0	0.60
	ECA1AM682	10	6800	0.34	680.0	1400	16	25	7.5	0.80
	ECA1AM103	10	10000	0.42	1000.0	1600	16	31.5	7.5	0.80
	ECA1AM153	10	15000	0.52	1500.0	1850	18	35.5	7.5	0.80
	ECA1CM100	16	10	0.20	3.0	30	5	11	2.0	0.50
	ECA1CM220	16	22	0.20	3.5	75	5	11	2.0	0.50
	ECA1CM330	16	33	0.20	5.2	110	5	11	2.0	0.50
	ECA1CM470	16	47	0.20	7.5	130	5	11	2.0	0.50
	ECA1CM680	16	68	0.20	10.9	140	5	11	2.0	0.50
	ECA1CM101	16	100	0.20	16.0	180	5	11	2.0	0.50
	ECA1CM221	16	220	0.20	35.2	280	6.3	11.2	2.5	0.50
	ECA1CM331	16	330	0.20	52.8	350	8	11.5	3.5	0.60
	ECA1CM471	16	470	0.20	75.2	440	8	11.5	3.5	0.60
	ECA1CM102	16	1000	0.20	160.0	680	10	16	5.0	0.60
	ECA1CM102L	16	1000	0.20	160.0	680	8	20	3.5	0.60
	ECA1CM102U	16	1000	0.20	160.0	680	10	12.5	5.0	0.60
	ECA1CM222	16	2200	0.22	352.0	1000	12.5	20	5.0	0.60
	ECA1CM332	16	3300	0.24	528.0	1200	12.5	25	5.0	0.60

Remark

*1 120Hz 85°C

Standard long lead type

Customer Part No	Matsushita Part No	W.V. (V D.C.)	Cap (μF)	tan δ max.	L.C. (μA) max.	Ripple current (mA rms.) max. *1	Dim. (mm)			
							ϕD	L	P	ϕd
	ECA1CM472	16	4700	0.26	752.0	1360	16	25	7.5	0.80
	ECA1CM472U	16	4700	0.26	752.0	1088	16	20	7.5	0.80
	ECA1CM682	16	6800	0.34	1088.0	1600	16	31.5	7.5	0.80
	ECA1CM103	16	10000	0.42	1600.0	1800	18	35.5	7.5	0.80
	ECA1EM100	25	10	0.16	3.0	50	5	11	2.0	0.50
	ECA1EM220	25	22	0.16	5.5	90	5	11	2.0	0.50
	ECA1EM330	25	33	0.16	8.2	110	5	11	2.0	0.50
	ECA1EM470	25	47	0.16	11.7	130	5	11	2.0	0.50
	ECA1EM101	25	100	0.16	25.0	180	6.3	11.2	2.5	0.50
	ECA1EM221	25	220	0.16	55.0	310	8	11.5	3.5	0.60
	ECA1EM331	25	330	0.16	82.5	390	8	11.5	3.5	0.60
	ECA1EM471	25	470	0.16	117.5	480	10	12.5	5.0	0.60
	ECA1EM102	25	1000	0.16	250.0	850	10	20	5.0	0.60
	ECA1EM102U	25	1000	0.16	250.0	850	10	16	5.0	0.60
	ECA1EM222	25	2200	0.18	550.0	1200	12.5	25	5.0	0.60
	ECA1EM332	25	3300	0.20	825.0	1300	16	25	7.5	0.80
	ECA1EM392	25	3900	0.20	975.0	1500	16	25	7.5	0.80
	ECA1EM472	25	4700	0.22	1175.0	1500	16	31.5	7.5	0.80
	ECA1EM472S	25	4700	0.22	1175.0	1500	18	25	7.5	0.80
	ECA1EM682	25	6800	0.26	1700.0	1750	18	35.5	7.5	0.80
	ECA1EM822	25	8200	0.30	2050.0	1750	18	35.5	7.5	0.80
	ECA1VM100	35	10	0.14	3.5	60	5	11	2.0	0.50
	ECA1VM220	35	22	0.14	7.7	95	5	11	2.0	0.50
	ECA1VM330	35	33	0.14	11.5	110	5	11	2.0	0.50
	ECA1VM470	35	47	0.14	16.4	130	5	11	2.0	0.50
	ECA1VM101	35	100	0.14	35.0	210	6.3	11.2	2.5	0.50
	ECA1VM221	35	220	0.14	77.0	350	8	11.5	3.5	0.60
	ECA1VM331	35	330	0.14	115.5	440	10	12.5	5.0	0.60
	ECA1VM471	35	470	0.14	164.5	550	10	16	5.0	0.60
	ECA1VM102	35	1000	0.14	350.0	900	12.5	20	5.0	0.60
	ECA1VM102U	35	1000	0.14	350.0	900	10	20	5.0	0.60
	ECA1VM222	35	2200	0.16	770.0	1250	16	25	7.5	0.80
	ECA1VM332	35	3300	0.18	1155.0	1400	16	31.5	7.5	0.80
	ECA1VM472	35	4700	0.20	1645.0	1600	18	35.5	7.5	0.80
	ECA1VM562	35	5600	0.22	1645.0	1600	18	35.5	7.5	0.80

Remark *1 120Hz 85°C

Standard long lead type

Customer Part No	Matsushita Part No	W.V. (V D.C.)	Cap (μF)	tan δ max.	L.C. (μA) max.	Ripple current (mA rms.) max. *1	Dim. (mm)			
							ϕD	L	P	ϕd
	ECA1HM0R1	50	0.1	0.12	3.0	1.3	5	11	2.0	0.50
	ECA1HMR22	50	0.22	0.12	3.0	2.9	5	11	2.0	0.50
	ECA1HMR33	50	0.33	0.12	3.0	4.4	5	11	2.0	0.50
	ECA1HMR47	50	0.47	0.12	3.0	5	5	11	2.0	0.50
	ECA1HMR68	50	0.68	0.12	3.0	7	5	11	2.0	0.50
	ECA1HM010	50	1	0.12	3.0	10	5	11	2.0	0.50
	ECA1HM2R2	50	2.2	0.12	3.0	20	5	11	2.0	0.50
	ECA1HM3R3	50	3.3	0.12	3.0	35	5	11	2.0	0.50
	ECA1HM4R7	50	4.7	0.12	3.0	45	5	11	2.0	0.50
	ECA1HM6R8	50	6.8	0.12	3.0	7	5	11	2.0	0.50
	ECA1HM100	50	10	0.12	5.0	65	5	11	2.0	0.50
	ECA1HM220	50	22	0.12	11.0	100	5	11	2.0	0.50
	ECA1HM330	50	33	0.12	16.5	110	5	11	2.0	0.50
	ECA1HM470	50	47	0.12	23.5	130	6.3	11.2	2.5	0.50
	ECA1HM101	50	100	0.12	50.0	250	8	11.5	3.5	0.60
	ECA1HM221	50	220	0.12	110.0	400	10	12.5	5.0	0.60
	ECA1HM331	50	330	0.12	165.0	500	10	16	5.0	0.60
	ECA1HM471	50	470	0.12	235.0	650	10	20	5.0	0.60
	ECA1HM102	50	1000	0.12	500.0	1050	12.5	25	5.0	0.60
	ECA1HM222	50	2200	0.14	1100.0	1300	16	31.5	7.5	0.80
	ECA1HM332	50	3300	0.16	1650.0	1500	18	35.5	7.5	0.80
	ECA1JM010	63	1	0.11	3.0	15	5	11	2.0	0.50
	ECA1JM2R2	63	2.2	0.11	3.0	25	5	11	2.0	0.50
	ECA1JM4R7	63	4.7	0.11	3.0	50	5	11	2.0	0.50
	ECA1JM100	63	10	0.11	6.3	70	5	11	2.0	0.50
	ECA1JM220	63	22	0.11	13.8	105	5	11	2.0	0.50
	ECA1JM330	63	33	0.11	20.7	130	6.3	11.2	2.5	0.50
	ECA1JM470	63	47	0.11	29.6	160	6.3	11.2	2.5	0.50
	ECA1JM101	63	100	0.11	63.0	270	8	11.5	3.5	0.60
	ECA1JM101S	63	100	0.11	63.0	270	10	12.5	5.0	0.60
	ECA1JM221	63	220	0.11	138.6	450	10	16	5.0	0.60
	ECA1JM331	63	330	0.11	207.9	550	10	20	5.0	0.60
	ECA1JM471	63	470	0.11	296.1	750	12.5	20	5.0	0.60
	ECA1JM102	63	1000	0.11	630.0	1100	16	25	7.5	0.80
	ECA1JM222	63	2200	0.13	1386.0	1400	18	35.5	7.5	0.80

Remark

*1 120Hz 85°C

Standard long lead type

Customer Part No	Matsushita Part No	W.V. (V D.C.)	Cap (μF)	tan δ max.	L.C. (μA) max.	Ripple current (mA rms.) max. *1	Dim. (mm)			
							ϕD	L	P	ϕd
	ECA2AMR47	100	0.47	0.06	3.0	10	5	11	2.0	0.50
	ECA2AM010	100	1	0.06	3.0	20	5	11	2.0	0.50
	ECA2AM2R2	100	2.2	0.06	3.0	30	5	11	2.0	0.50
	ECA2AM3R3	100	3.3	0.06	3.0	40	5	11	2.0	0.50
	ECA2AM4R7	100	4.7	0.06	3.0	50	5	11	2.0	0.50
	ECA2AM100	100	10	0.06	10.0	70	5	11	2.0	0.50
	ECA2AM220	100	22	0.06	22.0	115	6.3	11.2	2.5	0.50
	ECA2AM330	100	33	0.06	33.0	145	8	11.5	3.5	0.60
	ECA2AM470	100	47	0.06	47.0	180	8	11.5	3.5	0.60
	ECA2AM101	100	100	0.06	100.0	350	10	16	5.0	0.60
	ECA2AM221	100	220	0.06	220.0	550	12.5	20	5.0	0.60
	ECA2AM331	100	330	0.06	330.0	700	12.5	25	5.0	0.60
	ECA2AM471	100	470	0.06	470.0	900	16	25	7.5	0.80
	ECA2AM102	100	1000	0.06	1000.0	1300	18	35.5	7.5	0.80
	ECA2CMR47	160	0.47	0.16	3.0	9.5	5	11	2.0	0.50
	ECA2CM010	160	1	0.16	3.0	36	6.3	11.2	2.5	0.50
	ECA2CM2R2	160	2.2	0.16	3.5	53	6.3	11.2	2.5	0.50
	ECA2CM3R3	160	3.3	0.16	5.3	66	6.3	11.2	2.5	0.50
	ECA2CM4R7	160	4.7	0.16	7.5	78	6.3	11.2	2.5	0.50
	ECA2CM6R8	160	6.8	0.16	10.9	86	8	11.5	3.5	0.60
	ECA2CM100	160	10	0.16	16.0	105	10	12.5	5.0	0.60
	ECA2CM220	160	22	0.16	35.2	175	10	16	5.0	0.60
	ECA2CM330	160	33	0.16	52.8	235	10	20	5.0	0.60
	ECA2CM470	160	47	0.16	75.2	320	12.5	20	5.0	0.60
	ECA2CM101	160	100	0.16	160.0	515	12.5	25	5.0	0.60
	ECA2CM221	160	220	0.16	352.0	830	16	31.5	7.5	0.80
	ECA2CM471	160	470	0.16	752.0	1440	18	40	7.5	0.80
	ECA2DM010	200	1	0.18	3.0	34	6.3	11.2	2.5	0.50
	ECA2DM2R2	200	2.2	0.18	4.4	50	6.3	11.2	2.5	0.50
	ECA2DM3R3	200	3.3	0.18	6.6	62	6.3	11.2	2.5	0.50
	ECA2DM4R7	200	4.7	0.18	9.4	86	8	11.5	3.5	0.60
	ECA2DM100	200	10	0.18	20.0	100	10	12.5	5.0	0.60
	ECA2DM220	200	22	0.18	44.0	180	10	20	5.0	0.60
	ECA2DM330	200	33	0.18	66.0	220	10	20	5.0	0.60
	ECA2DM470	200	47	0.18	94.0	300	12.5	20	5.0	0.60
	ECA2DM820	200	82	0.18	164.0	390	16	25	7.5	0.80
	ECA2DM101	200	100	0.18	200.0	475	16	25	7.5	0.80
	ECA2DM151	200	150	0.18	300.0	530	16	31.5	7.5	0.80
	ECA2DM221U	200	220	0.18	440.0	530	16	31.5	7.5	0.80
	ECA2DM331U	200	330	0.18	660.0	1140	18	35.5	7.5	0.80
	ECA2DM331	200	330	0.18	660.0	1140	18	40	7.5	0.80

Remark

*1 120Hz 85°C

Standard long lead type

Customer Part No	Matsushita Part No	W.V. (V D.C.)	Cap (μF)	tan δ max.	L.C. (μA) max.	Ripple current (mA rms.) max. *1	Dim. (mm)			
							ϕD	L	P	ϕd
	ECA2EMR47	250	0.47	0.18	3.0	34	5	11	2.0	0.50
	ECA2EM010	250	1	0.18	3.0	34	6.3	11.2	2.5	0.50
	ECA1EM2R2	250	2.2	0.18	5.5	50	6.3	11.2	2.5	0.50
	ECA2EM3R3	250	3.3	0.18	8.3	72	8	11.5	3.5	0.60
	ECA2EM4R7	250	4.7	0.18	11.8	86	8	11.5	3.5	0.60
	ECA2EM100	250	10	0.18	25.0	110	10	16	5.0	0.60
	ECA2EM220	250	22	0.18	55.0	180	10	20	5.0	0.60
	ECA2EM220U	250	22	0.18	55.0	180	10	16	5.0	0.60
	ECA2EM330	250	33	0.18	82.5	250	12.5	20	5.0	0.60
	ECA2EM470	250	47	0.18	117.5	330	12.5	25	5.0	0.60
	ECA2EM101	250	100	0.18	250.0	530	16	31.5	7.5	0.80
	ECA2EM101S	250	100	0.18	250.0	530	18	20	7.5	0.80
	ECA2EM221	250	220	0.18	550.0	930	18	40	7.5	0.80
	ECA2VM010	350	1	0.20	3.5	32	6.3	11.2	2.5	0.50
	ECA2VM2R2	350	2.2	0.20	7.7	55	8	11.5	3.5	0.60
	ECA2VM3R3	350	3.3	0.20	11.6	60	8	11.5	3.5	0.60
	ECA2VM4R7	350	4.7	0.20	16.5	65	10	12.5	5.0	0.50
	ECA2VM100	350	10	0.20	35.0	115	10	20	5.0	0.60
	ECA2VM220	350	22	0.20	77.0	195	12.5	20	5.0	0.60
	ECA2VM330	350	33	0.20	115.5	300	16	25	7.5	0.80
	ECA2VM470	350	47	0.20	164.5	325	16	25	7.5	0.80
	ECA2GM010	400	1	0.20	4.0	32	6.3	11.2	2.5	0.50
	ECA2GM2R2	400	2.2	0.20	8.8	50	8	11.5	3.5	0.60
	ECA2GM3R3	400	3.3	0.20	13.2	54	10	12.5	5.0	0.60
	ECA2GM4R7	400	4.7	0.20	18.8	72	10	16	5.0	0.60
	ECA2GM6R8	400	6.8	0.20	27.2	72	10	16	5.0	0.60
	ECA2GM100	400	10	0.20	40.0	115	10	20	5.0	0.60
	ECA2GM220	400	22	0.20	88.0	215	12.5	25	5.0	0.60
	ECA2GM330	400	33	0.20	132.0	275	16	25	7.5	0.80
	ECA2GM470	400	47	0.20	188.0	350	16	31.5	7.5	0.80
	ECA2GM680U	400	68	0.20	272.0	350	16	31.5	7.5	0.80
	ECA2GM820	400	82	0.20	328.0	300	18	35.5	7.5	0.80
	ECA2GM101	400	100	0.20	400.0	600	18	40	7.5	0.80
	ECA2WM010	450	1	0.20	4.5	37	8	11.5	3.5	0.60
	ECA2WM2R2	450	2.2	0.20	9.9	44	10	12.5	5.0	0.60
	ECA2WM3R3	450	3.3	0.20	14.9	60	10	16	5.0	0.60
	ECA2WM4R7	450	4.7	0.20	21.2	79	10	20	5.0	0.60
	ECA2WM100	450	10	0.20	45.0	130	12.5	20	5.0	0.60
	ECA2WM220	450	22	0.20	99.0	210	16	25	7.5	0.80
	ECA2WM330	450	33	0.20	148.5	285	16	31.5	7.5	0.80

Remark

*1 120Hz 85°C

ϕ5 ~ ϕ8

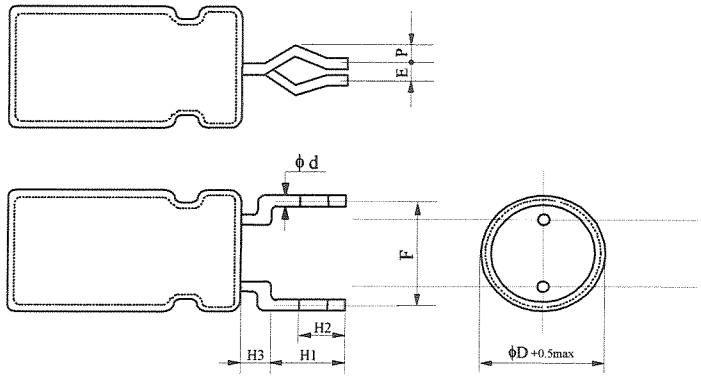

ϕ10 ~ ϕ18

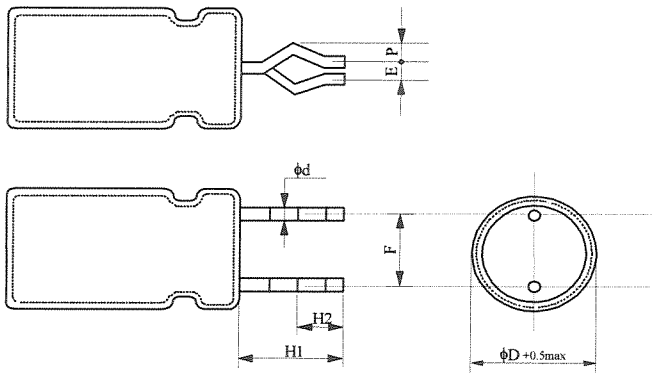

* Direction of bending shape is random

[unit : mm]

ΦD	H1 ± 0.5	H2	H3 max.	F ± 0.5	P	E max.	Φd ± 0.05	P.W.B.	
								Φ	t
5	4.5	2.7	2.5	5.0	1.0	1.0	0.5	0.9	1.6
6.3	4.5	2.7	2.5	5.0	1.0	1.0	0.5/0.6	1.0	1.6
8	4.5	2.7	2.5	5.0	1.0	1.0	0.6	1.0	1.6
10	4.5	2.7	-	5.0	1.0	1.0	0.6	1.0	1.6
12.5	4.5	2.7	-	5.0	1.0	1.0	0.6	1.0	1.6
16	4.5	2.7	-	7.5	0.9	1.0	0.8	1.1	1.6
18	4.5	2.7	-	7.5	0.9	1.0	0.8	1.1	1.6

* The above lead forming dimensions shall be subjected only to Electrolytic Capacitor outgoing inspection and not to customer's incoming inspection.
Due to mechanical stress during transportation, actual dimensions may not meet to specification.

Remark

1) Application range
This specification is applied to aluminium electrolytic capacitor (JIS:04 type), taped with a single tape.

2) Taping shape and dimension :

ϕ5

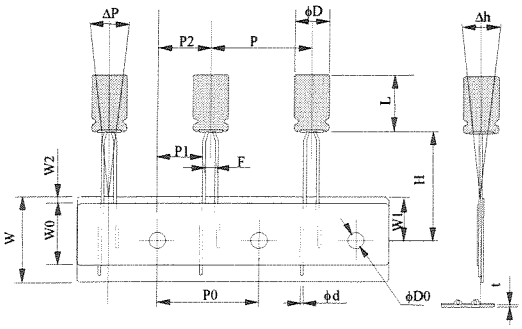

ϕ6.3

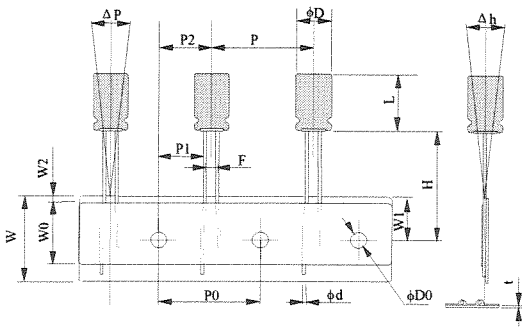

[mm]

Item	Symbol	Dimensions		Tolerance	Remarks
Product diameter	ϕD	5	6.3	+ 0.50	
Product length	L	11.0 ~ 11.2		+ 1.00	
Lead wire diameter	ϕd	0.50		± 0.05	
Product pitch	P	12.70		± 1.00	
Feed hole pitch	P0	12.70		± 0.20	
Hole center to lead wire	P1	5.10		± 0.50	Specified by the contact face between tape and lead wire
Feed hole center to product center	P2	6.35		± 1.00	
Lead to lead distance	F	2.50		± 0.50	Ditto
K liner width	W	18.00		± 0.50	
Crepe tape width	W0	6.0 ≤		-	
Hole position	W1	9.00		± 0.50	
Crepe tape slipping	W2	1.50 max.		-	
Product from hole height	H	18.50		+0.75 / -0.50	
Feed hole diameter	ϕD0	4.00		± 0.20	
Inclination of body	Δh	1.00 ≥		-	Specified by the edge of aluminium
Inclination of body	ΔP	1.00 ≥		-	
Total tape thickness	t	0.60		± 0.30	CP wire is not included

Remark

1) Application range
This specification is applied to aluminium electrolytic capacitor (JIS:04 type), taped with a single tape.

2) Taping shape and dimension :

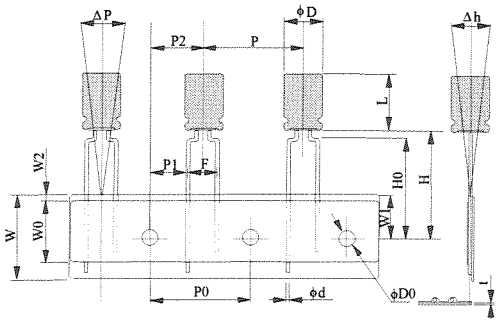

[mm]

Item	Symbol	Dimensions			Tolerance	Remarks
Product diameter	ϕD	5	6.3	8	+ 0.50	
Product length	L	11.0 ~ 11.5			+ 1.00	
Lead wire diameter	ϕd	0.50		0.60	± 0.05	
Product pitch	P	12.70			± 1.00	
Feed hole pitch	P0	12.70			± 0.20	
Hole center to lead wire	P1	3.85			± 0.50	Specified by the contact face between tape and lead wire
Feed hole center to product center	P2	6.35			± 1.00	
Lead to lead distance	F	5.00			+0.80 / -0.20	Ditto
K liner width	W	18.00			± 0.50	
Crepe tape width	W0	6.0 ≤			-	
Hole position	W1	9.00			± 0.50	
Crepe tape slipping	W2	1.50 max.			-	
Product from hole height	H	18.5		20.0	+0.75 / -0.50	
Product from hole height	H0	16.00			± 0.50	
Feed hole diameter	ϕD0	4.00			± 0.20	
Inclination of body	Δh	1.00 ≥			-	Specified by the edge of aluminium
Inclination of body	ΔP	1.00 ≥			-	
Total tape thickness	t	0.60			± 0.30	CP wire is not included

Lead form angle, θ = 90° min

Remark

1) Application range
This specification is applied to aluminium electrolytic capacitor (JIS:04 type), taped with a single tape.

2) Taping shape and dimension :

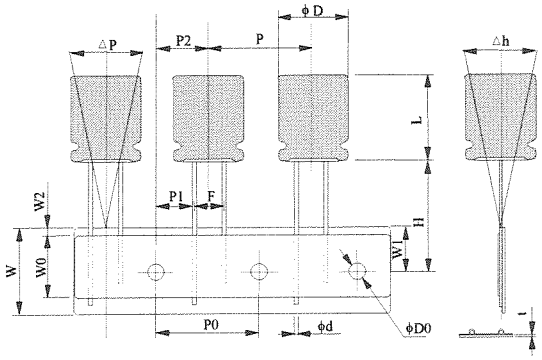

[mm]

Item	Symbol	Dimensions		Tolerance	Remarks
Product diameter	ϕD	10	12.5	+ 0.50	
Product length	L	12.5 ~ 25.0		-	
Lead wire diameter	ϕd	0.60		± 0.05	
Product pitch	P	12.70	15.00	± 1.00	
Feed hole pitch	P0	12.70	15.00	± 0.20	
Hole center to lead wire	P1	3.85	5.00	± 0.50	Specified by the contact face between tape and lead wire
Feed hole center to product center	P2	6.35	7.50	± 1.00	
Lead to lead distance	F	5.00		+0.80 / -0.20	Ditto
K liner width	W	18.00		± 0.50	
Crepe tape width	W0	6.0 ≤		-	
Hole position	W1	9.00		± 0.50	
Crepe tape slipping	W2	1.5 max.		-	
Product from hole height	H	18.50		+0.75 / -0.50	
Feed hole diameter	ϕD0	4.00		± 0.20	
Inclination of body	Δh	1.00≥		-	Specified by the edge of aluminium
Inclination of body	ΔP	1.00≥		-	
Total tape thickness	t	0.60		± 0.30	CP wire is not included

Remark

1) Application range
This specification is applied to aluminium electrolytic capacitor (JIS:04 type), taped with a single tape.

2) Taping shape and dimension :

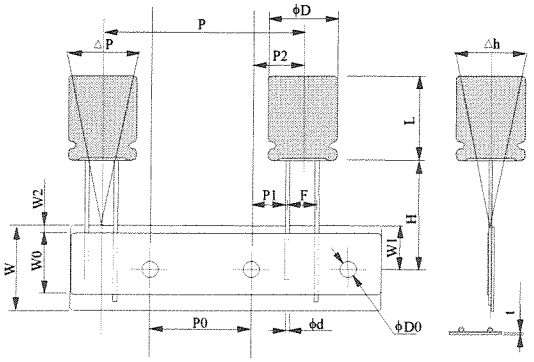

[mm]

Item	Symbol	Dimensions		Tolerance	Remarks
Product diameter	ϕD	16	18	+ 0.50	
Product length	L	20~31.5	20~40	+ 2.00	
Lead wire diameter	ϕd	0.80		± 0.05	
Product pitch	P	30.00		± 1.00	
Feed hole pitch	P0	15.00		± 0.20	
Hole center to lead wire	P1	3.75		± 0.50	Specified by the contact face between tape and lead wire
Feed hole center to product center	P2	7.50		± 1.00	
Lead to lead distance	F	7.50		± 0.50	Ditto
K liner width	W	18.00		± 0.50	
Crepe tape width	W0	6.0 ≤		-	
Hole position	W1	9.00		± 0.50	
Crepe tape slipping	W2	1.5 max.		-	
Product from hole height	H	18.50		+0.75 / -0.50	
Feed hole diameter	ϕD0	4.00		± 0.20	
Inclination of body	Δh	2.00≥		-	Specified by the edge of aluminium
Inclination of body	ΔP	1.30≥		-	
Total tape thickness	t	0.60		± 0.30	CP wire is not included

Remark

1. Taping method

1-1 The capacitors shall be placed vertically on the base tape, and be fixed with the adhesive tape, with polarity oriented.

Example :

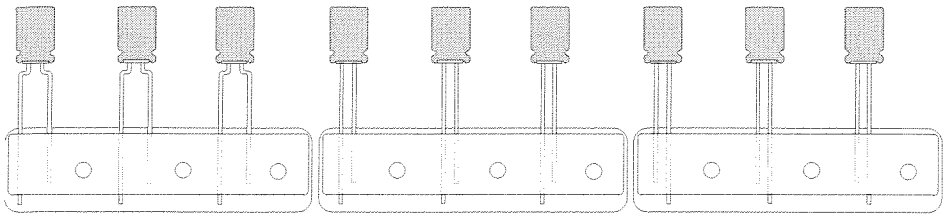

Polarity direction :

$\phi 5 \sim \phi 12.5$: Negative on the right

$\phi 16 \sim \phi 18$: Negative the left

1-2 Blank spaces for connection shall be no more than 3 pieces. The number of blank spaces shall not be limited.

1-3 The connection method is as follows. The portion shall meet the general taping specification. The position of connection shall not be limited.

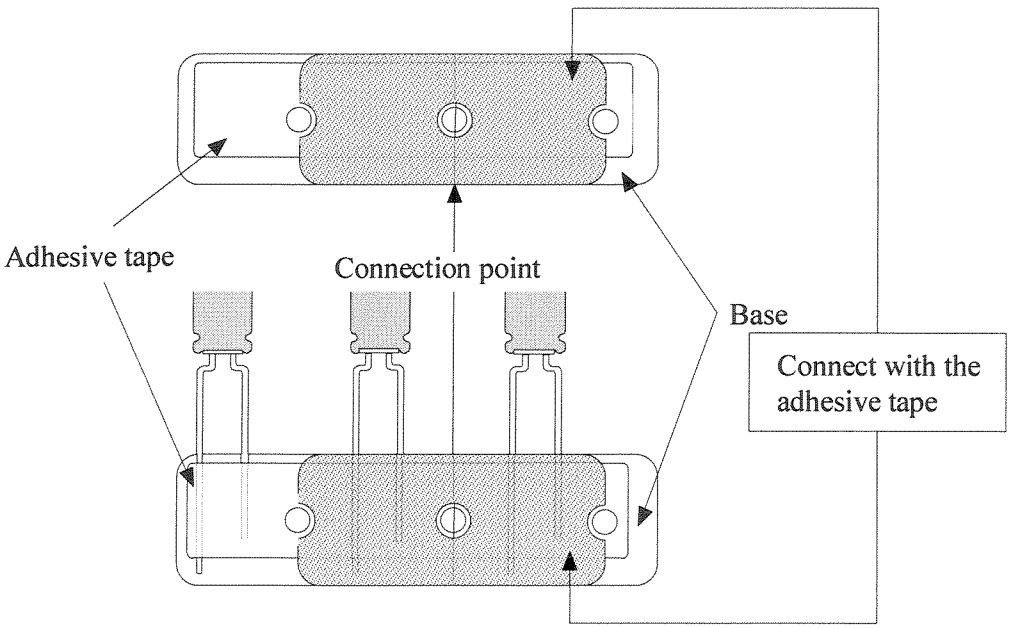

Note :

1) The base shall not be piled
2) The connection shall not be done with staples

Remark

1-4 In the case of removing the products after taping, lead wires shall be cut, or the capacitor shall be pulled out. The length of remaining lead wire shall be less than 2.0mm from the upper edge of
the base tape.

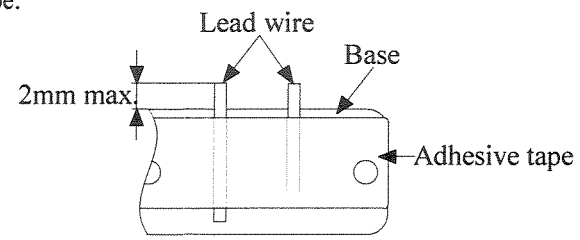

1-5 Tensile strength of lead wire after taping (applicable for the positive lead wire only) :
Fix the tape as below and pull the positive lead wire along the vertical direction by using the push pull scale.
The tensile strength shall be greater than 2.94N.

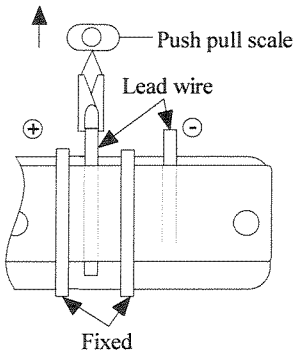

After storing for 250 hours in an atmosphere of 40 ± 2°C and 90 ~ 98%RH, the taped products shall meet the above specification and there shall be no inclination of the capacitors or masking the holes with the adhesive.

2. <u>Packing method</u>

2-1 Taped products shall be packed in a zigzag pattern into a cardboard box.
There shall be a single part number in an inner carton.
(Example)

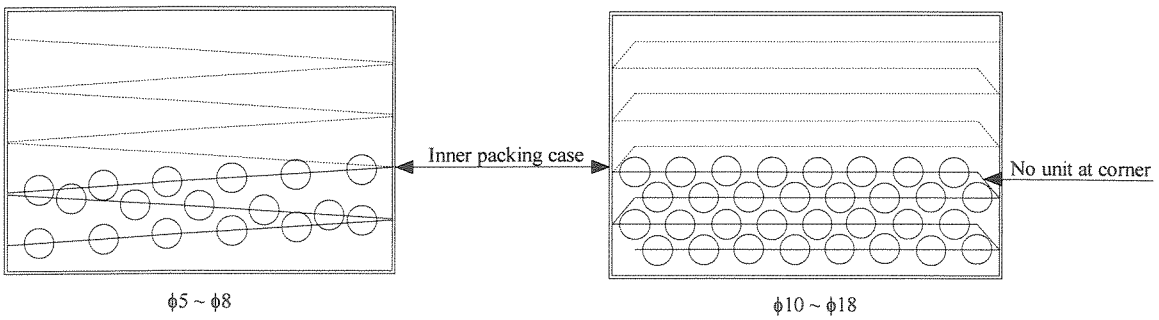

Remark

2-2 Polarity identification on a cardboard box shall match the polarity of products.

2-3 Inner carton box shall be handled as follows :

* No more than 10 inner carton boxes shall be piled.
* In the case of putting the boxes lengthways, the indication of polarity shall face upwards.
* The product shall be handled with care.

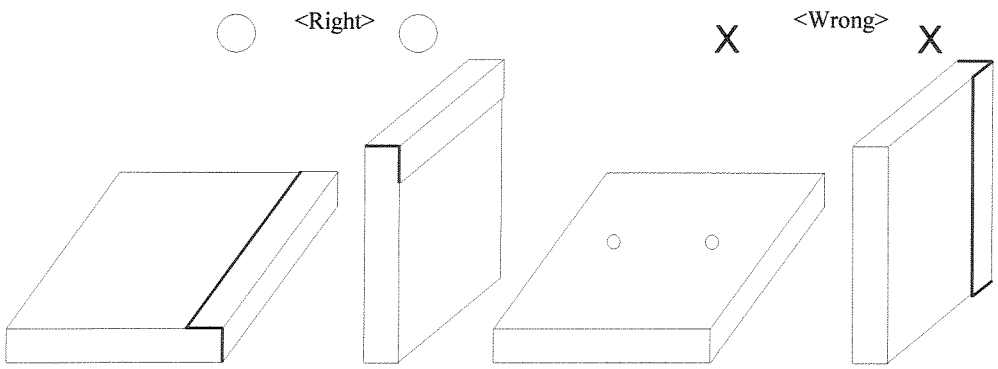

2-4 The inner cartons shall be packed in a cardboard box for transportation.
Various part numbers can be packed in an outer carton box.

2-5 Shape and dimensions of the inner carton shall be as follows. The lids have perforation for easy removal.

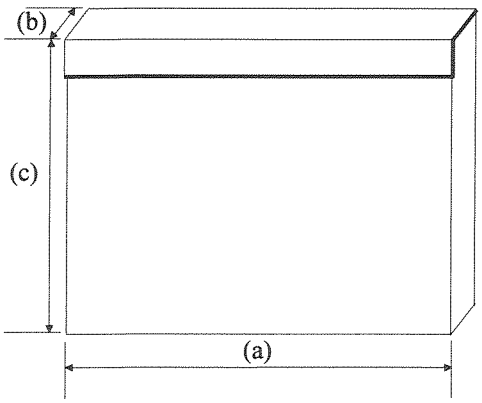

[mm]

Can size		(a)	(b)	(c)
ΦD	L			
5	11	328	52	208
6.3	11.2	328	44	270
8	11.5	328	53	223
	20	328	59	223
10	12.5	337	50	169
	16	337	54	169
	20	337	57	169
12.5	20	324	57	264
	25	324	61	264
16	25	306	62	216
	31.5	217	68	312
18	35.5	275	73	343

Note : The dimensions listed above may change without prior notice.
The carton shall be suitable for the auto-insert machines after change.

Remark

2-6 Packing Quantity

Product diameter (Φ) [mm]	Inner carton quantity [pcs]	Outer carton quantity [pcs]
5	2000	10000
6.3	2000	10000
8	1000	5000
10	500	2000
12.5	500	2000
16	250	1000
18	250	500

3. Storage

3-1 The handling method shall follow Item 2-3 which is specified in this specification.

3-2 The product shall not be in contact with direct sunlight and the temperature and humidity shall be normal.

4. Ordering unit

The order placed shall be multiples of inner carton quantity.

Example :

ϕ5 ~ ϕ6.3 : minimum 2,000 pieces
ϕ8 : minimum 1,000 pieces
ϕ10 ~ ϕ12.5 : minimum 500 pieces
ϕ16 ~ ϕ18 : minimum 250 pieces

Remark

1. Circuit design

1.1 Operating Temperature and Frequency

Electrical parameters for electrolytic capacitors are normally specified at 20°C temperature and 120Hz frequency. These parameters vary with changes in temperature and frequency. Circuit designers should take these changes into consideration.

(1) Effects of operating temperature on electrical parameters

a) At higher temperatures, leakage current and capacitance increase while equivalent series resistance (ESR) decreases.

b) At lower temperatures, leakage current and capacitance decrease while equivalent series resistance (ESR) increases.

(2) Effects of frequency on electrical parameters

a) At higher frequencies, capacitance and impedance decrease while tan δ increases.

b) At lower frequencies, ripple current generated heat will rise due to an increase in equivalent series resistance (ESR).

1.2 Operating Temperature and Life Expectancy

(1) Expected life is affected by operating temperature. Generally, each 10°C reduction in temperature will double the expected life. Use capacitors at the lowest possible temperature below maximum guaranteed temperature.

(2) If operating temperatures exceed the maximum guaranteed limit, rapid electrical parameter deterioration will occur, and irreversible damage will result.
Check for maximum capacitor operating temperatures including ambient temperature, internal capacitor temperature rise caused by ripple current, and the effects of radiated heat from power transistors, IC's or resistors.

(3) The formula for calculating expected life at lower operating temperatures is as follows :

$$L2 = L1 \times 2^{\frac{T1-T2}{10}}$$

L1 : Guaranteed life (h) at temperature, T1 °C
L2 : Expected life (h) at temperature, T2 °C
T1 : Maximum operating temperature (°C)
T2 : Actual operating temperature, ambient temperature + temperature rise due to ripple current heating (°C)

1.3 Common Application Condition To Avoid

The following misapplication load conditions will cause rapid deterioration to capacitor electrical parameters. In addition, rapid heating and gas generation within the capacitor may occur causing the pressure relief vent to operate and resulting leakage of electrolyte. Under extreme conditions, explosion and fire may result.
Leaking electrolyte is combustible and electrically conductive.

(1) Reverse voltage
DC capacitors have polarity. Verify correct polarity before insertion. For circuits with changing or uncertain polarity, use DC bi-polar capacitors. DC bi-polar capacitors are not suitable for use in AC circuits.

(2) Charge/Discharge Applications
Standard capacitors are not suitable for use in repeating charge/discharge applications. For charge/discharge application, consult us and advise actual conditions.

(3) Overvoltage
Do not apply voltages exceeding the maximum specified rated voltage. Voltages within the surge voltage rating are acceptable for short periods of time. Ensure that the sum of the DC voltage and the superimposed AC ripple voltage does not exceed the maximum specified rated voltage.

(4) Ripple Current
Do not apply ripple currents exceeding the maximum specified value. For high ripple current applications, use a capacitor designed for high ripple currents or contact us with your requirements. Ensure that allowable ripple currents superimposed on low DC bias voltage do not cause reverse voltage conditions.

1.4 Using Two or More Capacitor in Series or Parallel

(1) Capacitors Connected in Parallel
The circuit resistance can closely approximate the series resistance of the capacitor causing an imbalance of ripple current loads within the capacitors. Careful design of wiring methods can minimize the possibility of excessive ripple currents applied to a capacitor.

(2) Capacitor Connected in Series
Normal DC leakage current differences among capacitors can cause voltage imbalances. The use of voltage divider shunt resistors with consideration to leakage currents, can prevent capacitor voltage imbalances.

1.5 Capacitor Mounting Considerations

(1) Double-sided Circuit Boards
Avoid wiring pattern runs which pass between the mounted capacitor and the circuit board. When dipping into a solder bath, excess solder may collect under the capacitor by capillary action and short-circuit the anode and cathode terminals.

(2) Circuit Board Hole Positioning
The vinyl sleeve of the capacitor can be damaged if solder passes through a lead hole for subsequently processed parts. Special care when locating hole positions in proximity to capacitors is recommended.

(3) Circuit Board Hole Spacing
The circuit board hole spacing should match the capacitor lead wire spacing within the specified tolerances. Incorrect spacing can cause excessive lead wire stress during the insertion process. This may result the premature capacitor failure doe to short or open circuit, increased leakage current, or electrolyte leakage.

(4) Clearance for Case Mounted Pressure Relief Vents
Capacitor with case mounted pressure relief vents requires sufficient clearance to allow for proper vent operation. The minimum clearances are dependent on capacitor diameters as follows :
ϕ6.3 ~ ϕ16mm : 2mm minimum, ϕ18 mm : 3mm minimum

(5) Clearance for Seal Mounted Pressure Relief Vents
A hole in the circuit board directly under the seal vent location is required to allow proper release of pressure.

(6) Wiring Near the Pressure Relief Vent
Avoid locating high voltage or high current wiring or circuit board paths above the pressure relief vent. Flammable, high temperature gas exceeding 100°C may be released which could dissolve the wire insulation and ignite.

(7) Circuit Board Patterns Under the Capacitor
Avoid circuit board runs under the capacitor as electrolyte leakage could cause an electrical short.

(8) Screw Terminal Capacitor Mounting
Do not orient the capacitor with the screw terminal side of the capacitor facing downwards. Tighten the terminal and mounting bracket screws within the torque range specified in the specification.

1.6 Electrical Isolation of the Capacitor

Completely isolate the capacitor as follows :

(1) Between the cathode and the case (except for axially leaded B types) and between the anode terminal and other circuit paths.

(2) Between the extra mounting terminals (on T types) and the anode terminal, cathode terminal, and other circuit paths.

1.7 Capacitor Sleeve

The vinyl sleeve or laminate coating is intended for marking and identification purposes and is not meant to electrically insulate the capacitor.
The sleeving may split or crack if immersed into solvents such as toluene or xylene, and then exposed to high temperature.

CAUTION!!!!

Always consider safety when designing equipment and circuits. Plan for worst case failure modes such short circuits and open circuits which could occur during use.

(1) Provide protection circuits and protection devices to allow safe failure modes.

(2) Design redundant or secondary circuits where possible to assure continued operation in case of main circuit failure.

2. Capacitor Handling Techniques

2.1 Consideration Before Using

(1) Capacitors have a finite life. Do not reuse or recycle capacitors from used equipment.

(2) Transient recovery voltage may be generated in the capacitor due to dielectric absorption. If required, this voltage can be discharged with a resistor with a value of about 1 kΩ.

(3) Capacitors stored for long periods of time may exhibit an increase in leakage current. This can be connected by gradually applying rated voltage in series with a resistor of approximately 1 kΩ.

(4) If capacitors are dropped, they can be damaged mechanically or electrically. Avoid using dropped capacitors.
(5) Dented or crushed capacitors should not be used. The seal integrity can be compromised and loss of electrolyte/shortened life can result.

2.2 Capacitor Insertion
(1) Verify the correct capacitance and rated voltage of the capacitors.
(2) Verify the correct polarity of the capacitor before inserting.
(3) Verify the correct pole spacing before insertion (land pattern size in chip type) to avoid stress on the terminals.
(4) Ensure that the auto insertion equipment lead clinching operation does not stress the capacitor leads where they enter the seal of the capacitors. For chip type capacitors, excessive mounting pressure can cause high leakage current, short circuit, or disconnection.

2.3 Manual Soldering
(1) Observe temperature and time soldering specifications and do not exceed temperatures of 350°C for 3 seconds or less.
(2) If lead wires must be formed to meet terminal board hole spacing, avoid stress on the lead wire where it enters the capacitor seal.
(3) If a soldered capacitor must be removed and reinserted, avoid excessive stress to the capacitor leads.
(4) Avoid touching the tip of the soldering iron to the capacitor, to prevent melting of the vinyl sleeve.

2.4 Flow Soldering
(1) Do not immerse the capacitor body into the solder bath as excessive internal pressure could result.
(2) Observe proper soldering conditions (temperature, time, etc.). Do not exceed the specified limits.
(3) Do not allow other parts or components to touch the capacitor during soldering.

2.5 Other Soldering Consideration
Rapid temperature rises during the preheat operation and resin bonding operation can cause cracking of the capacitor vinyl sleeve.
For heat curing, do not exceed 150°C for a maximum time of 2 minutes.

2.6 Capacitor Handling after Soldering
(1) Avoid movement of the capacitor after soldering to prevent excessive stress on the lead wires where they enter the seal.
(2) Do not use the capacitor as a handle when moving the circuit board assembly.
(3) Avoid striking the capacitor after assembly to prevent failure due to excessive shock.

2.7 Circuit Board Cleaning
(1) Circuit boards can be immersed or ultrasonically cleaned using suitable cleaning solvents for up to 5 minutes and up to 60°C maximum temperatures. The boards should be thoroughly rinsed and dried.
The use of ozone depleting cleaning agents are not recommended in the interest of protecting the environment.
(2) Avoid using following solvent groups unless specifically allowed for in the specification :
Halogenated cleaning solvent except for solvent resistant capacitor types, halogenated solvents can permeate the seal and cause internal capacitor corrosion and failure. For solvent resistant capacitors, carefully follow the temperature and time requirements for the specification. 1-1-1 trichloroethane should never be used on any aluminium electrolytic capacitor.
- Alkali solvent : could attack and dissolve aluminium case.
- Petroleum based solvent : deterioration of the rubber seal could result.
- Xylene : deterioration of the rubber seal could result.
- Acetone : removal of the ink markings on the vinyl sleeve could result.

(3) A thorough drying after cleaning is required to remove residual cleaning solvents which maybe trapped between the capacitor and the circuit board. Avoid drying temperatures which exceed the maximum rated temperature of the capacitor.
(4) Monitor the contamination levels of the cleaning solvents during use by electrical conductivity, pH, specific gravity, or water content. Chlorine levels can rise with contamination and adversely affect the performance of the capacitor.

2.8 Mounting Adhesives and Coating Agents

When using mounting adhesives or coating agents to control humidity, avoid using materials containing halogenated solvents. Also, avoid the use of chloroprene base polymers.

After applying adhesives or coatings, dry thoroughly to prevent residual solvents from being trapped between the capacitor and the circuit board.

2.9 Fumigation

In exporting electronic appliances with aluminium electrolytic capacitors, in some cases fumigation treatment using such halogen compound as methyl bromide is conducted for wooden boxes. If such boxes are not dried well, the halogen left in the box is dispersed while transported and enters in the capacitors inside. This possibly causes electrical corrosion of the capacitors. Therefore, after performing fumigation and drying make sure that no halogen is left. Don't perform fumigation treatment to the whole electronic appliances packed in a box.

3.0 Precaution for using Capacitors

3.1 Environmental Conditions

Capacitors should not be stored or used in the following environments.

(1) Temperature exposure above the maximum rated or below the minimum rated temperature of the capacitors.
(2) Direct contact with water, salt water, or oil.
(3) High humidity condition where water could condense on the capacitor.
(4) Exposure to toxic gases such as hydrogen sulphide, sulphuric acid, nitric acid, chlorine, or ammonia.
(5) Exposure to ozone, radiation, or ultraviolet rays.
(6) Vibration and shock conditions exceeding specified requirements.

3.2 Electrical Precaution

(1) Avoid touching the terminals of the capacitor as possible electric shock could result. The exposed aluminium case is not insulated and could also cause electric shock if touched.
(2) Avoid short circuiting the area between the capacitor terminals with conductive materials including liquids such as acids and alkaline solutions.

4.0 Emergency Procedures

(1) If the pressure relief vent of the capacitor operates, immediately turn off the equipment and disconnect from the power source. This will minimize additional damage caused by the vaporizing electrolyte.
(2) Avoid contact with the escaping electrolyte gas which exceeds 100°C temperatures. If electrolyte or gas enters the eye, immediately flush the eye with large amount of water. If electrolyte or gas is ingested by mouth, gargle with water. If electrolyte contacts the skin, wash with soap and water.

5.0 Long Term Storage

Leakage current of a capacitor increases with long storage times. The aluminium oxide film deteriorates as a function of temperature and time. If used without reconditioning, an abnormally high current will be required to restore the oxide film. This current surge could cause the circuit or the capacitor to fail. In-order to keep the capacitor life, we recommend the capacitor store in-doors and temperature between 15°C ~ 35°C. Expiry date of capacitor shall be according to product model or type. Please consult us concerning the product life model by model. After storing exceeding the expiry date of the product, a capacitor should be reconditioned by applying rated voltage in series with a 1000Ω, current limiting resistor for a time period of 30 minutes.

5.1 Environmental Conditions

(1) Temperature exposure above the maximum rated or below the minimum rated temperature of the capacitor.
(2) Direct contact with water, salt water, or oil.
(3) High humidity conditions where water could condense on the capacitor.
(4) Exposure to toxic gases such as hydrogen sulphide, sulphuric acid, nitric acid, chlorine, or ammonia.
(5) Exposure to ozone, radiation, or ultraviolet rays.
(6) Vibration and shock conditions exceeding specified requirements.

6.0 Capacitor Disposal

When disposing of capacitors, use on of the following methods :

(1) Incinerate after crushing the capacitor or puncturing the can wall (to prevent explosion due to internal pressure rise). Capacitors should be incinerated at high temperature to prevent the release of toxic gases such as chlorine from the polyvinyl chloride sleeve, etc.
(2) Disposal of solid waste.

NOTE : Local laws may have specific disposal requirements which must be followed.