THIS DRAWING IS UNPUBLISHED. RELEASED FOR PUBLICATION 20
© COPYRIGHT 20 BY TYCO ELECTRONICS CORPORATION, ALL RIGHTS RESERVED.

LOC J DIST

REVISIONS 変更

P	LTR	DESCRIPTION	ECN	DATE	DWN	APVD
	0	RELEASED	FJ00-2386-01	10OCT2001	Y.K	N.S
	01	ADD "-2" NO SLIT TYPE	ECR-05-000427	10MAR2005	S.Y	Y.F
	A	ADD LONG LEVER TYPE	ECR-07-010628	07MAY07	T.J	Y.F

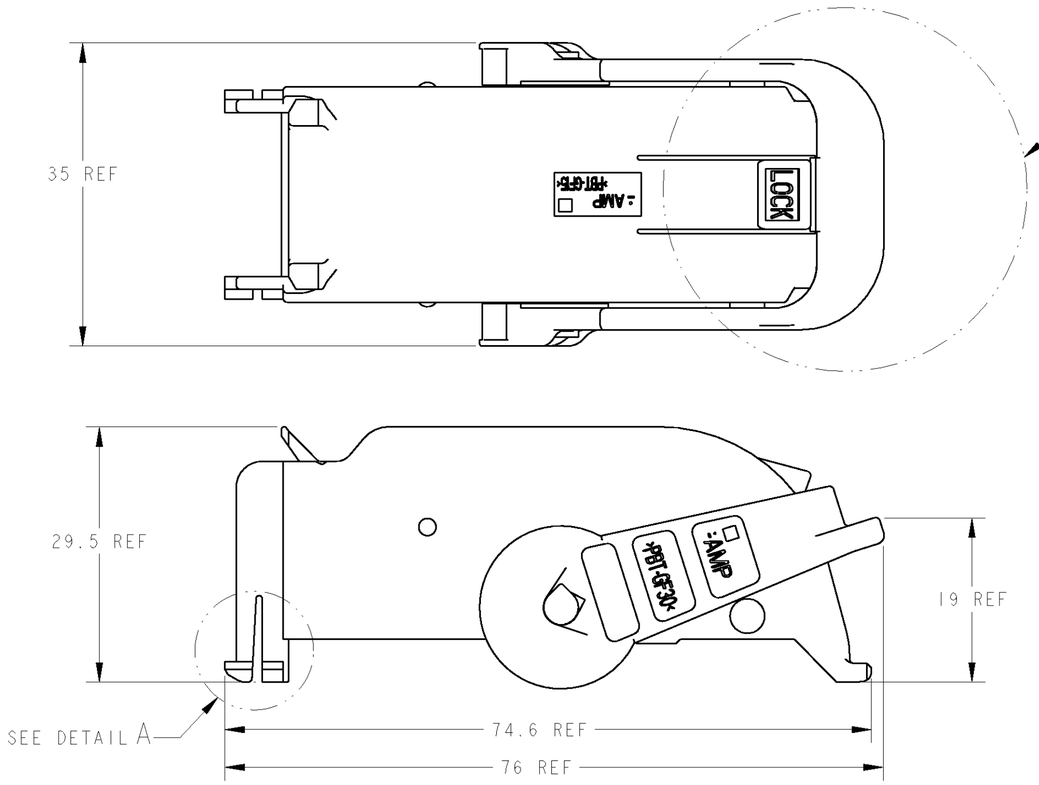

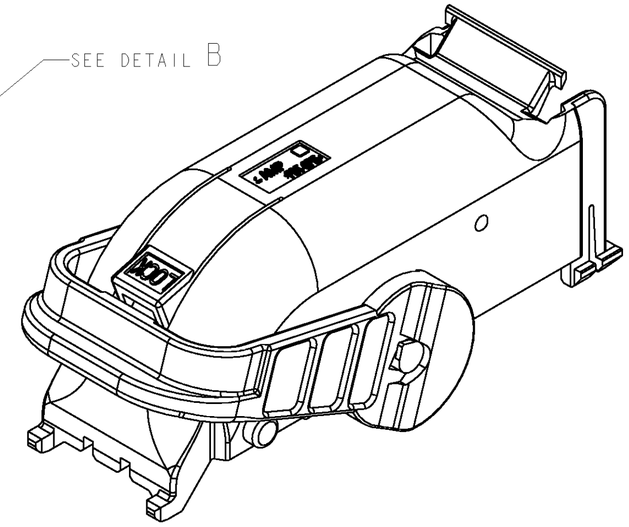

STANDARD LEVER TYPE

DETAIL A	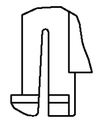	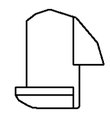
TYPE	SLIT TYPE	NO SLIT TYPE
P/N	1473250-1	1473250-2,-3

DETAIL B	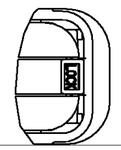	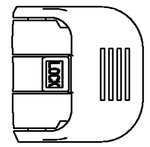
TYPE	STANDARD LEVER TYPE	LONG LEVER TYPE
P/N	1473250-1,-2	1473250-3

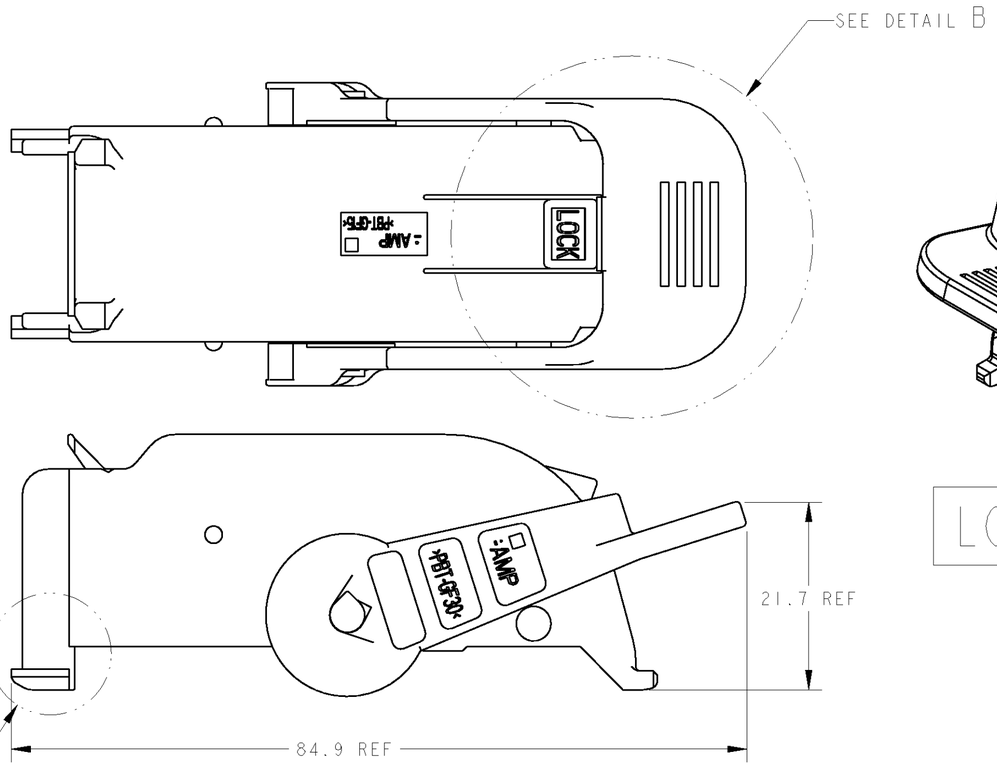

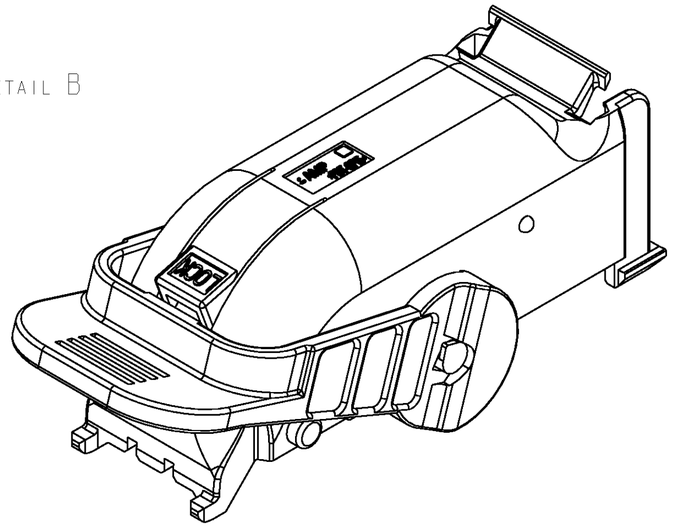

LONG LEVER TYPE

1. PART NUMBER OF PLUG HOUSING ASSEMBLY TO BE APPLIED ; SEE PRODUCT SPEC
2. INSTRUCTION SHEET NO ; 411-78008, 411-78142

1. 適応プラグハウジングアッセンブリ型番は、製品規格参照のこと。
2. 取扱説明書 NO ; 411-78008, 411-78142

-3	-2	-1	PART NAME	FINISH/COLOR	NO
1	-	-	LEVER (LONG TYPE)	WHITE	2
-	1	1	LEVER (STANDARD TYPE)	BLACK	
1	1	-	HARNESS COVER (NO SLIT)	BLACK	1
-	-	1	HARNESS COVER (SLIT)	BLACK	

THIS DRAWING IS A CONTROLLED DOCUMENT FOR TYCO ELECTRONICS CORPORATION. IT IS SUBJECT TO CHANGE AND THE CONTROLLING ENGINEERING ORGANIZATION SHOULD BE CONTACTED FOR THE LATEST REVISION.

DIMENSIONS: 単位: 粗 mm

TOLERANCES UNLESS OTHERWISE SPECIFIED: 一般公差=±0.3

0 PLC	±
1 PLC	±0.5
2 PLC	±0.13
3 PLC	±0.013
4 PLC	±0.0001
ANGLES	±3°00′

MATERIAL 材料: PBT

FINISH 仕上: SEE TABLE

DWN T.JIANG 07MAY07
CHK Y.NOGUCHI 07MAY07
APVD Y.FUJIWARA 07MAY07

PRODUCT SPEC 製品規格: 108-5793,108-5977

APPLICATION SPEC 取付適用規格: 114-18021,114-18050

WEIGHT 14.5g

Tyco Electronics — Tyco Electronics Corporation, Kawasaki, Japan

NAME 名称: LEVER ASSY TYPE-B SEALED 81POS. PLUG HSG MQS CLEAN BODY/JPT

SIZE A2 | CAGE CODE 00779 | DRAWING NO 書号 C-1473250 | RESTRICTED TO

CUSTOMER DRAWING | SCALE 尺度 2:1 | SHEET 1 OF 1 | REV A

AMP 1471-9 REV 31MAR2000

Pro/ENGINEER DRAWING