PART NAME	HAND-HELD PLASTIC BOX, STYLE 2	PART NO.	HP-3654-B	REVISION DATE	2-6-2009

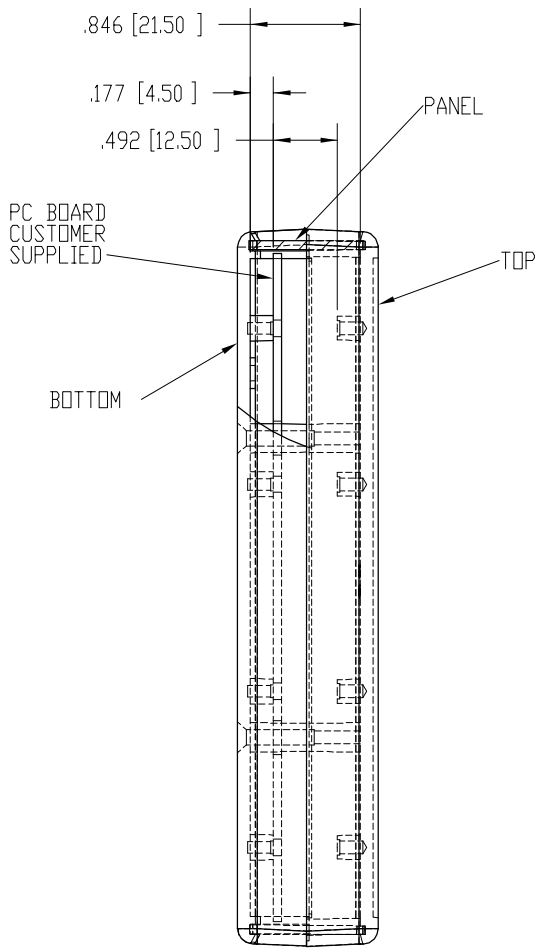

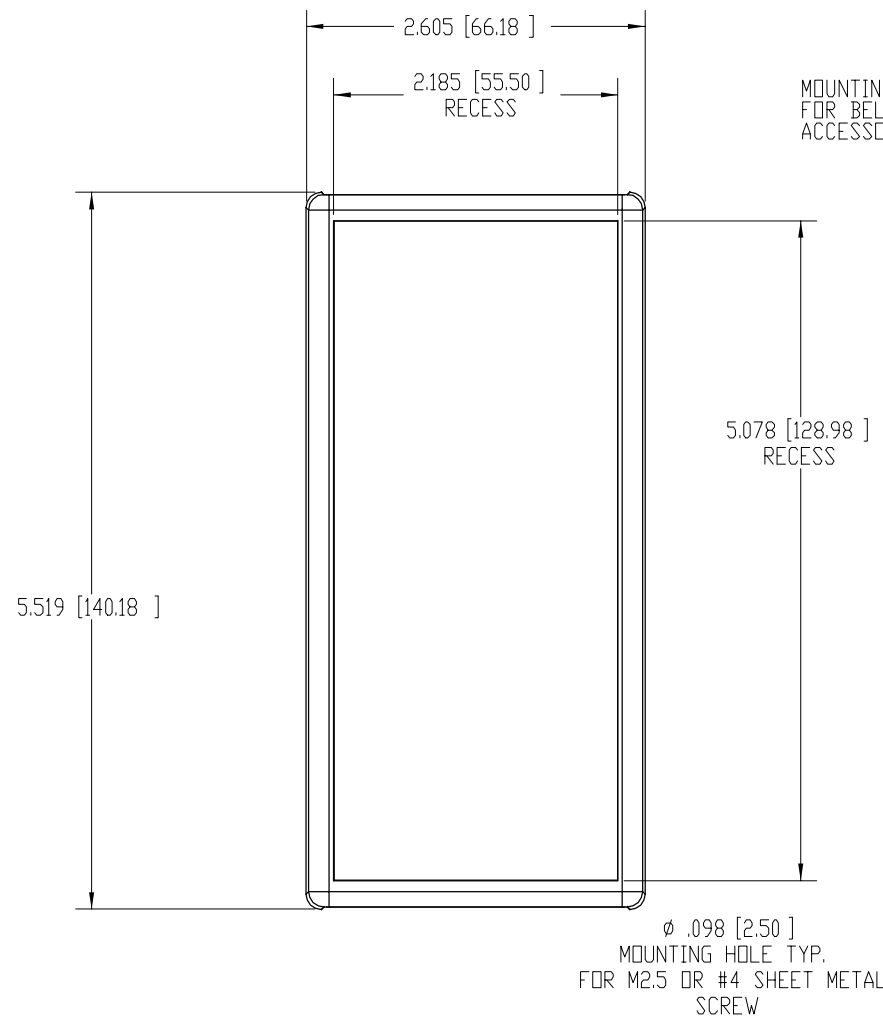

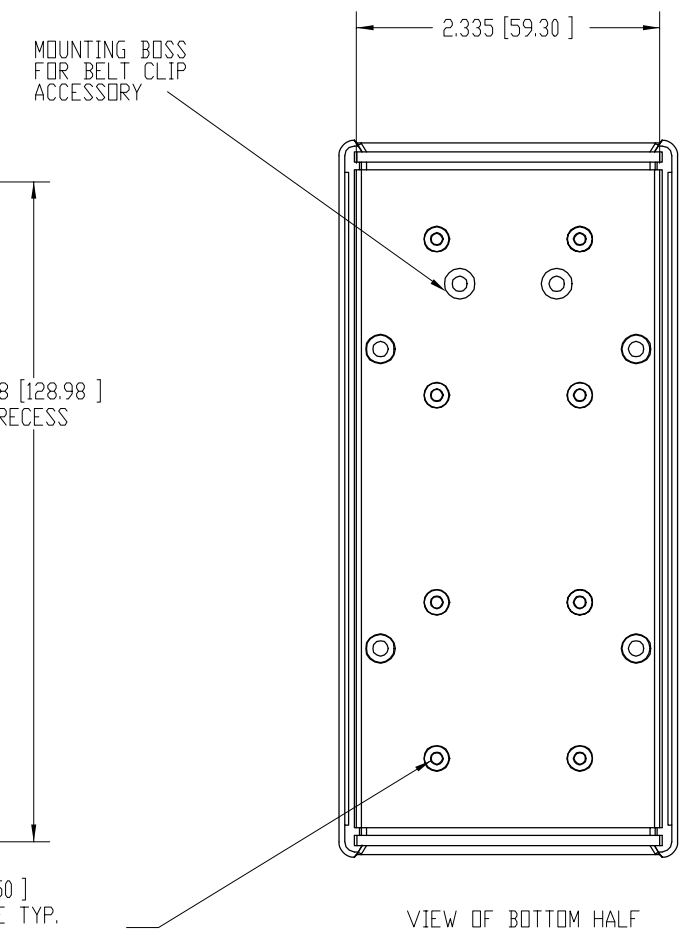

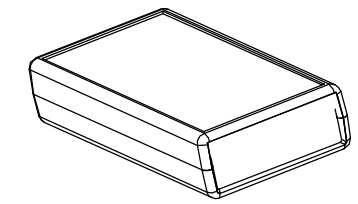

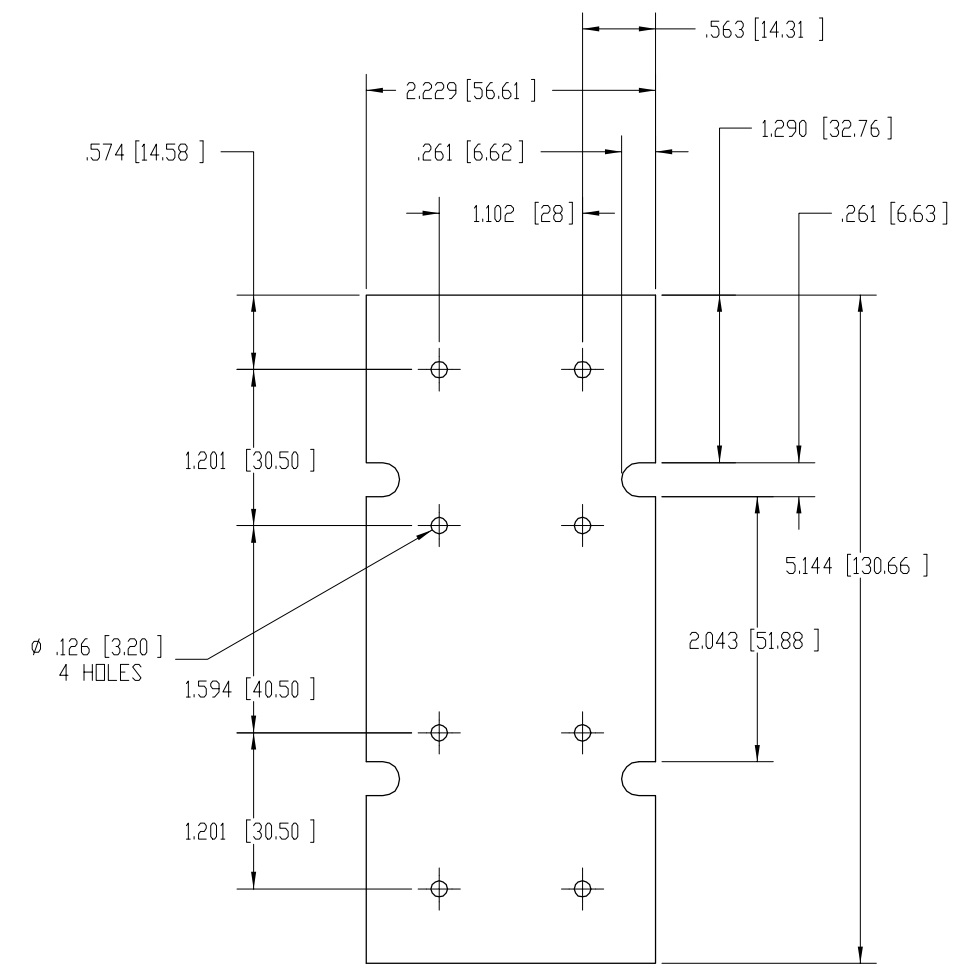

MAXIMUM PC BOARD SIZE
CUSTOMER SUPPLIED

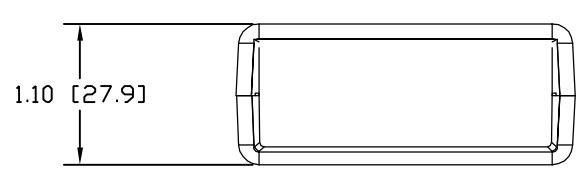

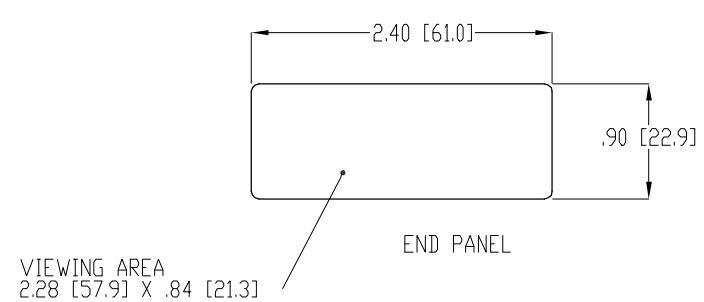

MATERIAL AND FINISH:

BLACK HIGH-IMPACT ABS (UL94-HB) - TOP, BOTTOM, AND END PANEL

FOUR (4) M3 X .63 [16] LG SCREWS SUPPLIED FOR ASSEMBLY

OPTIONAL ACCESSORIES:
INFRARED PANELS P/N HP-3645
BELT CLIP (BLACK) P/N HH-3595-BCB