PRODUCT NUMBER

98423–X61–XXXLF

PLATING

S = 0.38µm GOLD/GXT ON CONTACT AREA 2µm MIN MATTE TIN ON TAIL

G = 0.76µm GOLD/GXT ON CONTACT AREA 2µm MIN MATTE TIN ON TAIL

F = GOLD FASH ON CONTACT AREA 2µm MIN MATTE

RoHS COMPATIBLE, SEE NOTE 6

PACKAGING OPTIONAL LETTER (SEE NOTE 5)

NB OF POSITIONS PER ROW 02 TO 25 POS

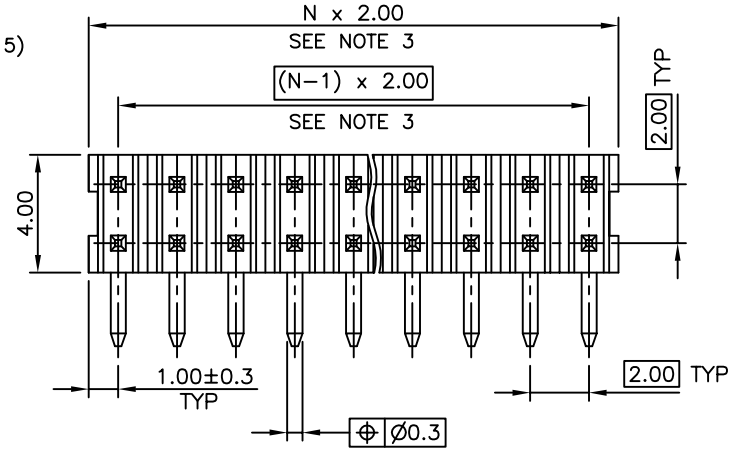

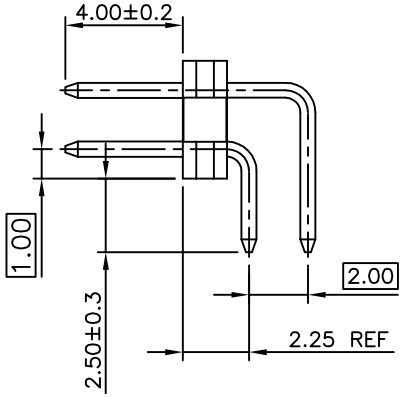

NOTES:

1. MATERIAL HOUSING: HIGH TEMP. THERMOPLASTIC UL 94V–0, COLOR BLACK
2. MATERIAL TERMINAL: COPPER ALLOY
3. TO DETERMINE DIMENSIONS: N = NUMBER OF POSITIONS PER ROW
4. 7N MIN. PIN RETENTION IN EITHER DIRECTION.
5. PACKAGING:
   = PLASTIC BOX
   U = TUBE AVAILABLE FROM 06 TO 50 POS
6. RoHS COMPATIBLE PRODUCT SPECIFICATIONS
   a – PLATING:
   – "LF" MEANS THE PRODUCT IS LEAD–FREE, 2µm MINIMUM MATTE TIN OVER 1.27µm MINIMUM NICKEL UNDERPLATE.
   b – MANUFACTURING PROCESS COMPATIBILITY
   – THE HOUSING WILL WITHSTAND EXPOSURE TO 260°C ±5°C SOLDER BATH TEMPERATURE FOR 5 SECONDS IN A WAVE SOLDER APPLICATION WITH A 1.6mm MIN THICK CIRCUIT BOARD.
   c – LABELLING:
   – MEETS PACKAGING SPECS AS PER GS–14–920
   d – THIS PRODUCT MEETS EUROPEAN DIRECTIVES AND OTHER COUNTRY REGULATIONS AS DISCRIBED IN GS–47–0004

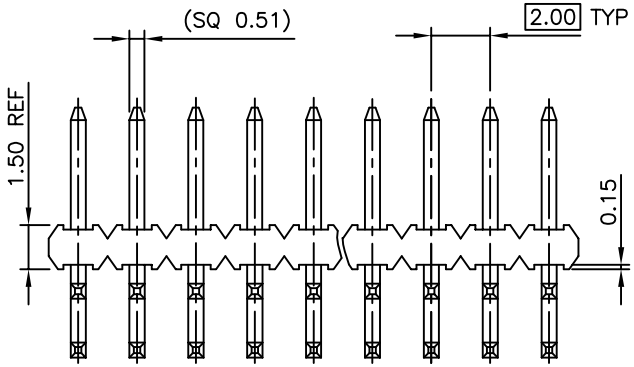

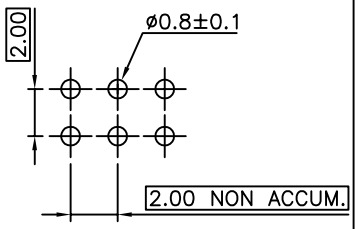

RECOMMENDED HOLE PATTERN

ltr	ecn no	dr	date
A	F10338	LMU	03.10.01
B	F04–0351	JCO	05.01.13
C	F06–0210	LMU	06.07.05
D	F08–0145	ELA	17.04.08
E	B–19190	LMU	14.10.24

mat'l. code

surface ISO 1302

tolerance ISO 406 ISO 1101

projection

tolerances unless otherwise specified

angles | linear | X ±0.3 | X.X ±0.13 | X.XX ±0.05

mm

scale 1:1

dr	L MULIN	04.09.28
engr	J COMPAGNON	04.09.28
chr		
appd	JM.C	04.09.28

product family: MINITEK

title: UNSHR HEADER RIGHT ANGLE TMT

dwg no: 98423 | sheet 1 of 1 | size A3

type: CUSTOMER Drawing

sheet index | revision sheet

form: A3

FCIconnect.com
Copyright FCI
Printed: Nov 13, 2014
STATUS:Released
PDS: Rev :E