DATE	REV	ECN	APP'D. BY
11-3-04	B5	6593	BS
11-11-05	B6	7375	TRM

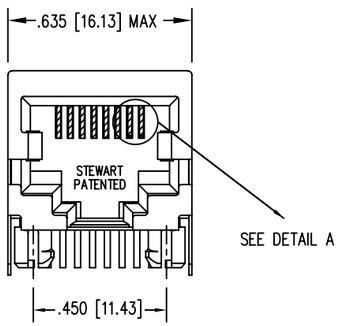

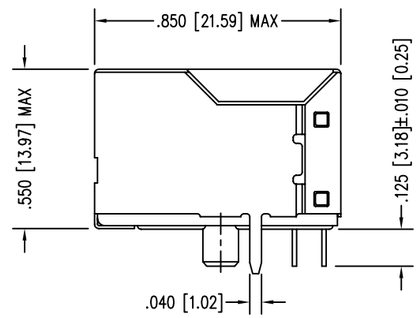

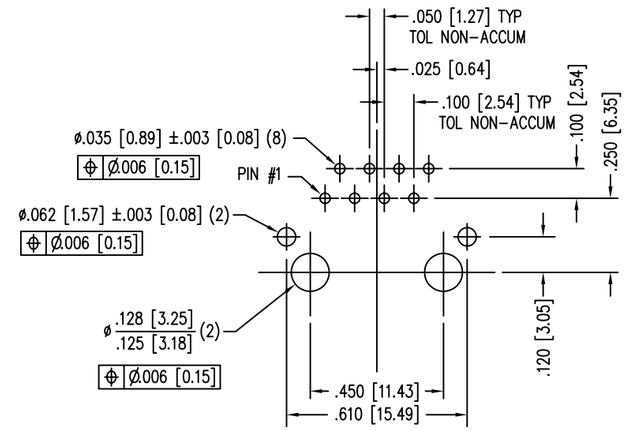

P.C.B. RECOMMENDED HOLE LAYOUT
SEEN FROM COMPONENT SIDE

ALL CENTERLINE DIMENSIONS ARE BASIC.

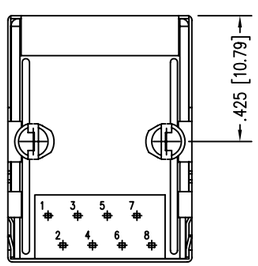

CONTACT SLOTS

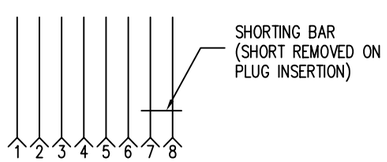

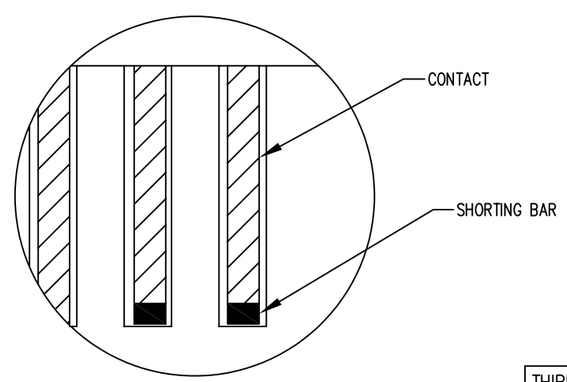

DETAIL A

NOTES:

CONNECTOR MATERIALS:
HOUSING: HIGH TEMPERATURE THERMOPLASTIC UL94 V-0
CONTACTS: COPPER ALLOY
CONTACT PLATING: SELECTIVE GOLD IN CONTACT AREA
SEE CHART FOR PART NUMBER

FOR PRODUCT SPECIFICATION SEE PR022-01

TOLERANCES COMPLY WITH F.C.C. DIMENSION REQUIREMENTS.

50 MICRO-INCHES [0.76um]	SS-6488S-A-NF-SB02
CONTACT PLATING IN MATING AREA	PART NUMBER

RoHS 2002/95/EC

THIRD ANGLE PROJECTION

DO NOT SCALE DRAWING

DRAWING IS SUBJECT TO CHANGE WITHOUT NOTICE

DIMENSIONS: INCHES [METRIC]

UNLESS OTHERWISE SPECIFIED TOLERANCES ARE ±.005 [0.13] ANGLES ARE ± 1°

SHEET NO. 1 OF 1

Bel Stewart Connector

11118 Susquehanna Trail South
Glen Rock, PA 17327-9199
(717) 235-7512 Fax: (717) 235-7954 http://www.stewartconnector.com

TITLE: EIGHT CONTACT, EIGHT POSITION, SHORTING BAR JACK WITH SHORTING CONTACTS 7 TO 8

THIS DRAWING AND THE SUBJECT MATTER SHOWN THEREON ARE CONFIDENTIAL AND THE PROPRIETARY PROPERTY OF BEL STEWART CONNECTOR AND SHALL NOT BE REPRODUCED, COPIED, OR USED IN ANY MANNER WITHOUT PRIOR WRITTEN CONSENT OF BEL STEWART CONNECTOR. THE SUBJECT MATTER MAY BE PATENTED OR A PATENT MAY BE PENDING.

DRN BY:	JAF	DATE	11-3-04
APPD BY:	BS	DATE	11-3-04
DWG NO.	CT640054	REV.	B6

AutoCAD