THIS DRAWING IS UNPUBLISHED. RELEASED FOR PUBLICATION -,- .
© COPYRIGHT - BY TYCO ELECTRONICS CORPORATION. ALL RIGHTS RESERVED.

LOC	DIST
FT	0

REVISIONS

P	LTR	DESCRIPTION	DATE	DWN	APVD
	G1	REVISED PER ECR 10-016010	09AUG10	JR	SM

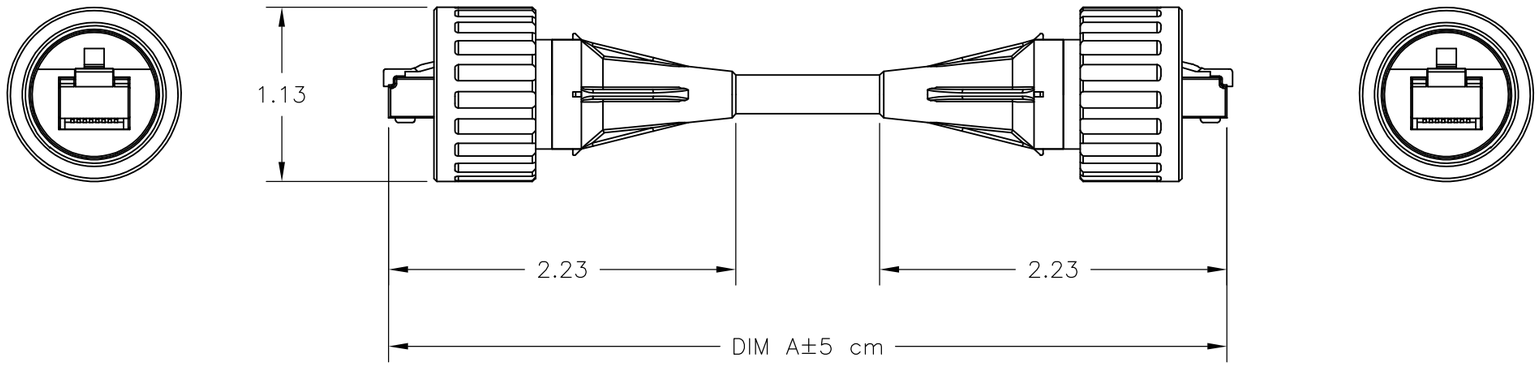

FIGURE 1

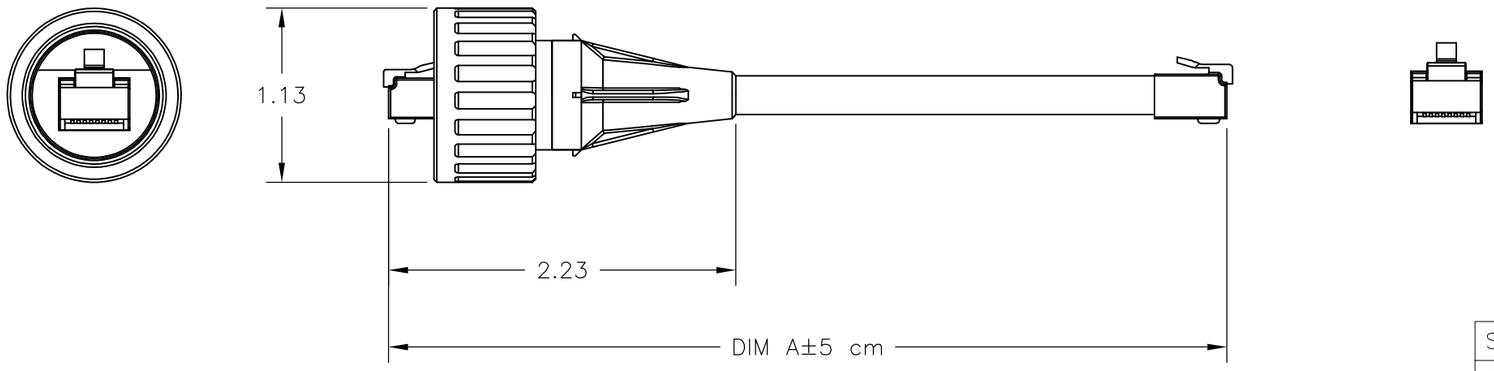

FIGURE 2

	FIGURE	DIM A	PART NO.
	FIG 1	22.86 M +14/-0 CM	1-1546451-5
	FIG 2	2 METERS+8.89/-0 CM	1-1546451-4
	FIG 1	10 METERS+31.75/-0 CM	1-1546451-3
	FIG 1	5 METERS+16.51/-0 CM	1-1546451-2
	FIG 1	1 METER+5.56/-0 CM	1-1546451-1
SUPERSEDED	FIG 2	2 METERS	1546451-4
SUPERSEDED	FIG 1	10 METERS	1546451-3
SUPERSEDED	FIG 1	5 METERS	1546451-2
SUPERSEDED	FIG 1	1 METER	1546451-1

THIS DRAWING IS A CONTROLLED DOCUMENT.

DIMENSIONS: INCHES

TOLERANCES UNLESS OTHERWISE SPECIFIED:

0 PLC	± -
1 PLC	± -
2 PLC	± .02
3 PLC	± .005
4 PLC	± -
ANGLES	± 2°

MATERIAL -

FINISH -

DWN S SCHLEGEL 12NOV02
CHK H WAKEEM 11/12/02
APVD H WAKEEM 11/12/02
PRODUCT SPEC -
APPLICATION SPEC -
WEIGHT -

Tyco Electronics

Tyco Electronics Corporation
Harrisburg, PA 17105

NAME
INDUSTRIAL ETHERNET CORDSET,
SOLID CORE, DOUBLE ENDED INDUSTRIAL
-

SIZE	CAGE CODE	DRAWING NO	RESTRICTED TO
A3	00779	C-1546451	-

CUSTOMER DRAWING

SCALE NTS SHEET 1 OF 1 REV G1