4.9 mm Square SMD Light Touch Switches

Type: **EVQPL**

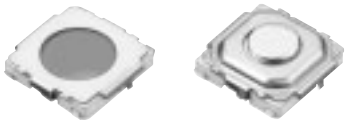

■ Features

- External dimensions : 4.9 mm×4.9 mm,
  Height: 0.8 mm(Without push plate), 1.5 mm(With push plate)

■ Recommended Applications

- Operation switches for portable electronic equipment (Notebook PC, Camcorders, Portable audio players, etc.)
- Operation switches for car audio systems

■ Explanation of Part Numbers

1	2	3	4	5	6	7	8	9
E	V	Q	P	L		A		
Product Code			Type				Height	

■ Product Chart

Height	H=0.8 mm	H=1.5 mm (With Push Plate)
Packaging / Operating Force	Embossed	Embossed
1.0 N	EVQPLB	EVQPLD
1.6 N	EVQPLF	EVQPLH
2.6 N	EVQPLK	EVQPLM

■ Specifications

Type		Snap action/Push-on type SPST	
Electrical	Rating	10 μA 2 Vdc to 20 mA 15 Vdc (Resistive load)	
	Contact Resistance	50 mΩ max.	
	Insulation Resistance	50 MΩ min. (at 100 Vdc)	
	Dielectric Withstanding Voltage	250 Vac for 1 minute	
	Bouncing	3 ms max. (ON) 8 ms max. (OFF)	
Mechanical	Operating Force	1.0 N±0.5 N 1.6 N±0.5 N	2.6 N±0.6 N
	Travel	0.25 mm $^{+0.10}_{-0.20}$ mm	
Endurance	Operating Life	500000 cycles min.	200000 cycles min.
Operating Temperature		–20 °C to +70 °C	
Storage Temperature		–40 °C to +85 °C (Bulk) –20 °C to +60 °C (Taping)	
Minimum Quantity/Packing Unit		5000 pcs. Embossed Taping (Reel Pack)	
Quantity/Carton		25000 pcs.	

Note: Non washable

Design and specifications are each subject to change without notice. Ask factory for the current technical specifications before purchase and/or use.
Should a safety concern arise regarding this product, please be sure to contact us immediately.

00 Sep. 2010

■ Dimensions in mm (not to scale)

No. 1

EVQPLB
EVQPLF
EVQPLK

(Embossed Taping)

Surface mount
For reflow soldering
Without push plate

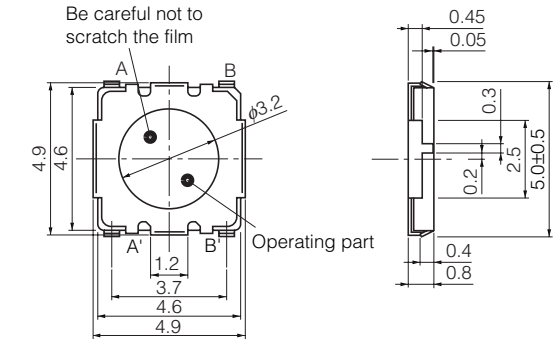

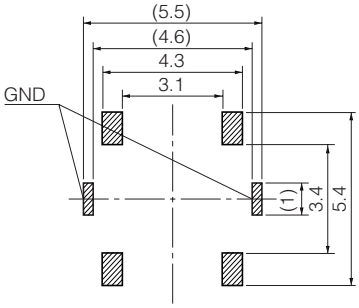

PWB land pattern for reference

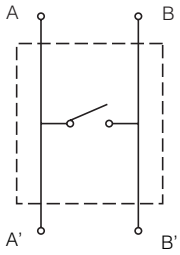

Circuit diagram

Part Numbers	Operating Force	Height	Operating Life
EVQPLBA08	1.0 N	0.8 mm	500000 cycles
EVQPLFA08	1.6 N	0.8 mm	500000 cycles
EVQPLKA08	2.6 N	0.8 mm	200000 cycles

No. 2

EVQPLD
EVQPLH
EVQPLM

(Embossed Taping)

Surface mount
For reflow soldering
With push plate

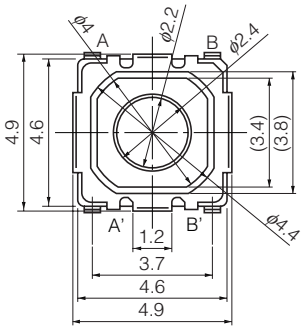

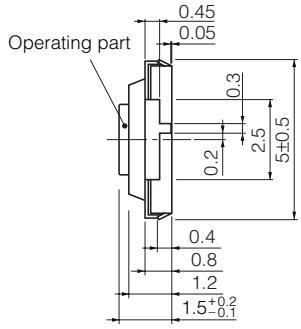

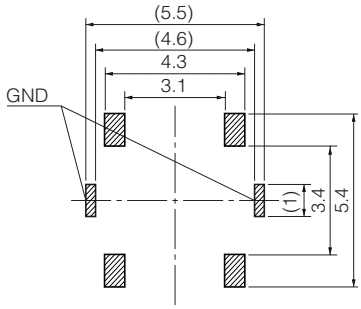

PWB land pattern for reference

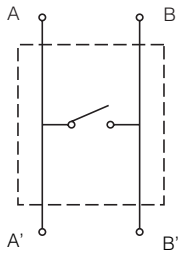

Circuit diagram

Part Numbers	Operating Force	Height	Operating Life
EVQPLDA15	1.0 N	1.5 mm	500000 cycles
EVQPLHA15	1.6 N	1.5 mm	500000 cycles
EVQPLMA15	2.6 N	1.5 mm	200000 cycles

Design and specifications are each subject to change without notice. Ask factory for the current technical specifications before purchase and/or use.
Should a safety concern arise regarding this product, please be sure to contact us immediately.

■ Recommended Reflow Soldering Conditions

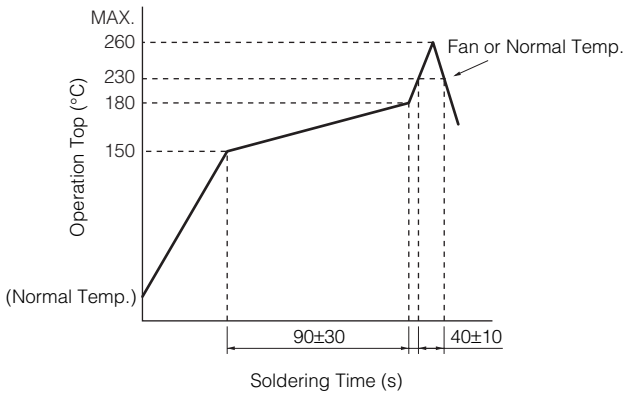

● Embossed Carrier Taping

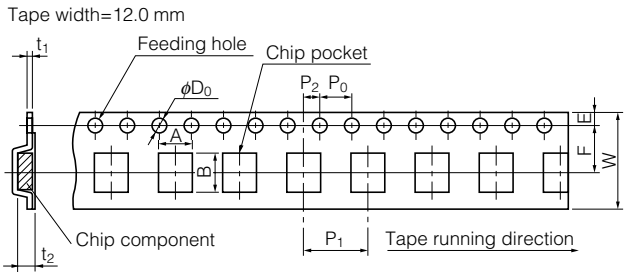

Unit: mm

Part No.	Height	A	B	W	F	E	P_1	P_2	P_0	D_0 Dia.	t_1	t_2
EVQPL	0.8/1.5	5.0±0.2	5.0±0.2	12.0±0.3	5.5±0.1	1.75±0.10	8.0±0.1	2.0±0.1	4.0±0.1	$1.5^{+0.1}_{-0}$	0.35±0.05	1.0/1.7±0.2

● Standard Reel Dimensions in mm (not to scale)

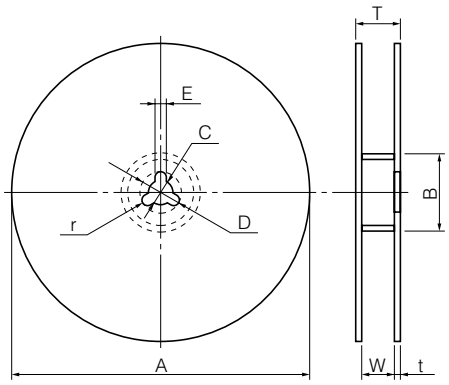

Item	A	B	C	D	E
Rate (mm)	φ370.0±2.0	φ50.0 min.	φ13.0±0.5	φ21.0±1.0	2.0±0.5

Item	W	T	t	r
Rate (mm)	14.0±1.5	—	1.0 to 3.0	1.0±0.5

■ Recommended Shape of Test Pole

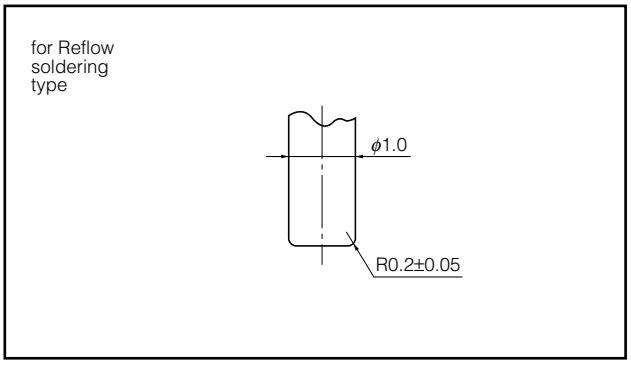

■ Recommended Operating Conditions

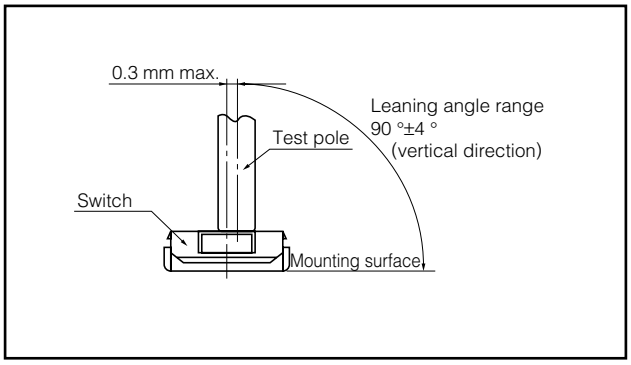

Design and specifications are each subject to change without notice. Ask factory for the current technical specifications before purchase and/or use.
Should a safety concern arise regarding this product, please be sure to contact us immediately.