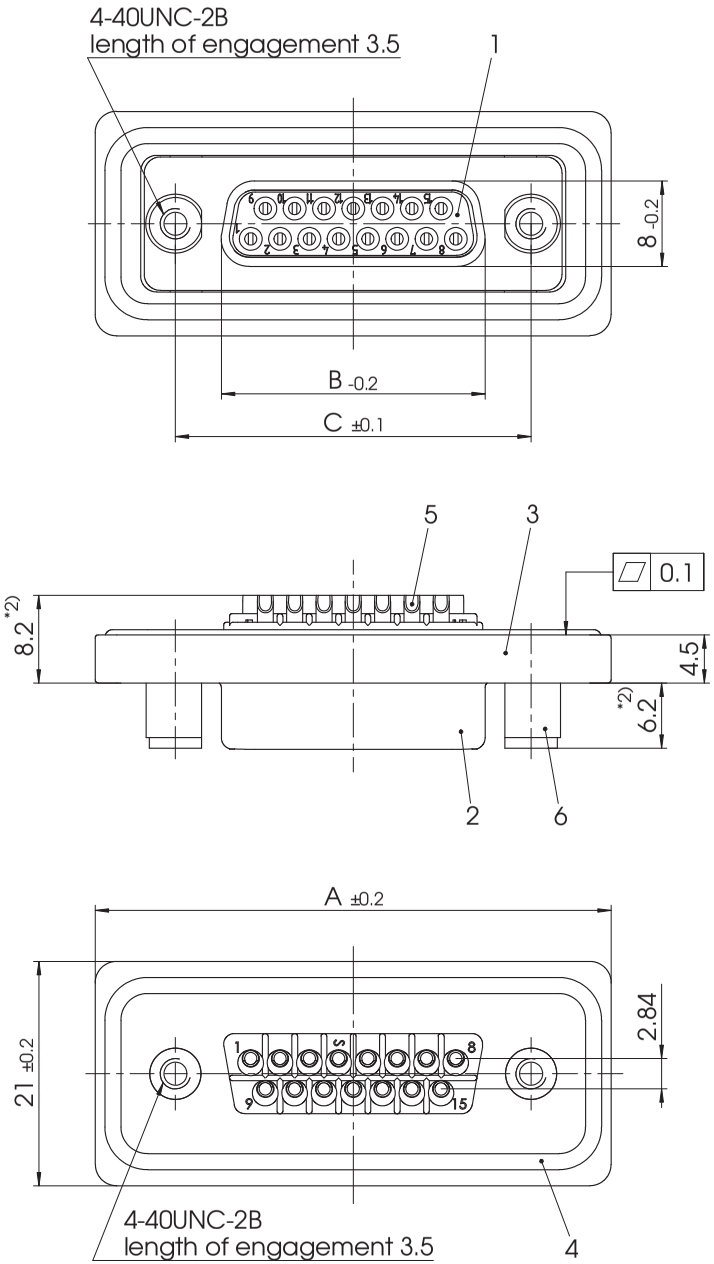

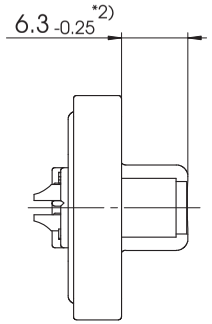

FWDFxx *1) SA

e.g. FWDF15SA

*1) xx No. of contacts 09, 15 or 25

xx	A mm	B mm	C mm
09	40	16.4	25
15	48.3	24.7	33.3
25	62	38.5	47.04

*2) Dimension starts from front surface of shell (Part-No. 2)

max. torque are 40 Ncm
D-Sub connector with watertight frame,
Protection standard IP67, 100% checked
according to DIN EN 60529 (compl. mounted)

No.	St.	Part	Type Description/Material	Surface plating/Colour/Class
6	2	Threaded spacer	4-40/4-40 / Brass	tin plated
5	xx	Signal contact	S0 / Brass	AuroPur / 0.1-0.2µm Au / AWG 20
4	1	O-ring seal	Silicone / UL94V-0	red
3	1	Watertight frame	PBT	black
2	1	Shell	Brass	tin plated
1	1	Insulator	PBT (-25°C - +70°C)	red

			Measurement without tolerance acc. to ISO 2768-m	SCALE 2:1	TITLE Waterproof Connector System
			NAME / DATE		
			DRAWN	tatjana.schneider 10-07-2013	
			CHECKED	Anke.Meyer-Richter 11-07-2013	
			FCT group fctgroup.com		DWG.NO. FWDFxxSA
1					REV. 1
REV.	DATE	CH.-NO.	ORIGINAL: DIN A3-DRAWING AS A FILE		REPLACEMENT FOR:
					PAGES 1

COMMENT:
ALL RIGHTS ARE RESERVED BY US FOR THIS DRAWING, WITHOUT OUR PRIOR CONSENT,
IT MAY NEITHER BE DUBLICATED NOR MADE AVAILABLE TO A THIRD PARTY,
AND IT ALSO MAY NOT BE IMPROPERLY USED BY TE RECEIVER, OR A THIRD PARTY.