DRAWING MADE IN THIRD ANGLE PROJECTION

THIS DRAWING IS UNPUBLISHED. RELEASED FOR PUBLICATION ,19 .

© COPYRIGHT 19 BY AMP INCORPORATED. ALL INTERNATIONAL RIGHTS RESERVED.

PART NUMBER	KEYING TYPE
501931-1	A TO B
501931-2	M TO S

LOC	DIST
CE	16

REVISIONS

P	F	ZONE	LTR	DESCRIPTION	DATE	APPD
			A	REV PER CE-1416		
			B	REV PER CE-1951	10-2-90	RH/WS
			C	REV PER CE-2699	2-25-93	RH/TF

1. DIMENSIONS IN [ ] ARE IN INCHES.

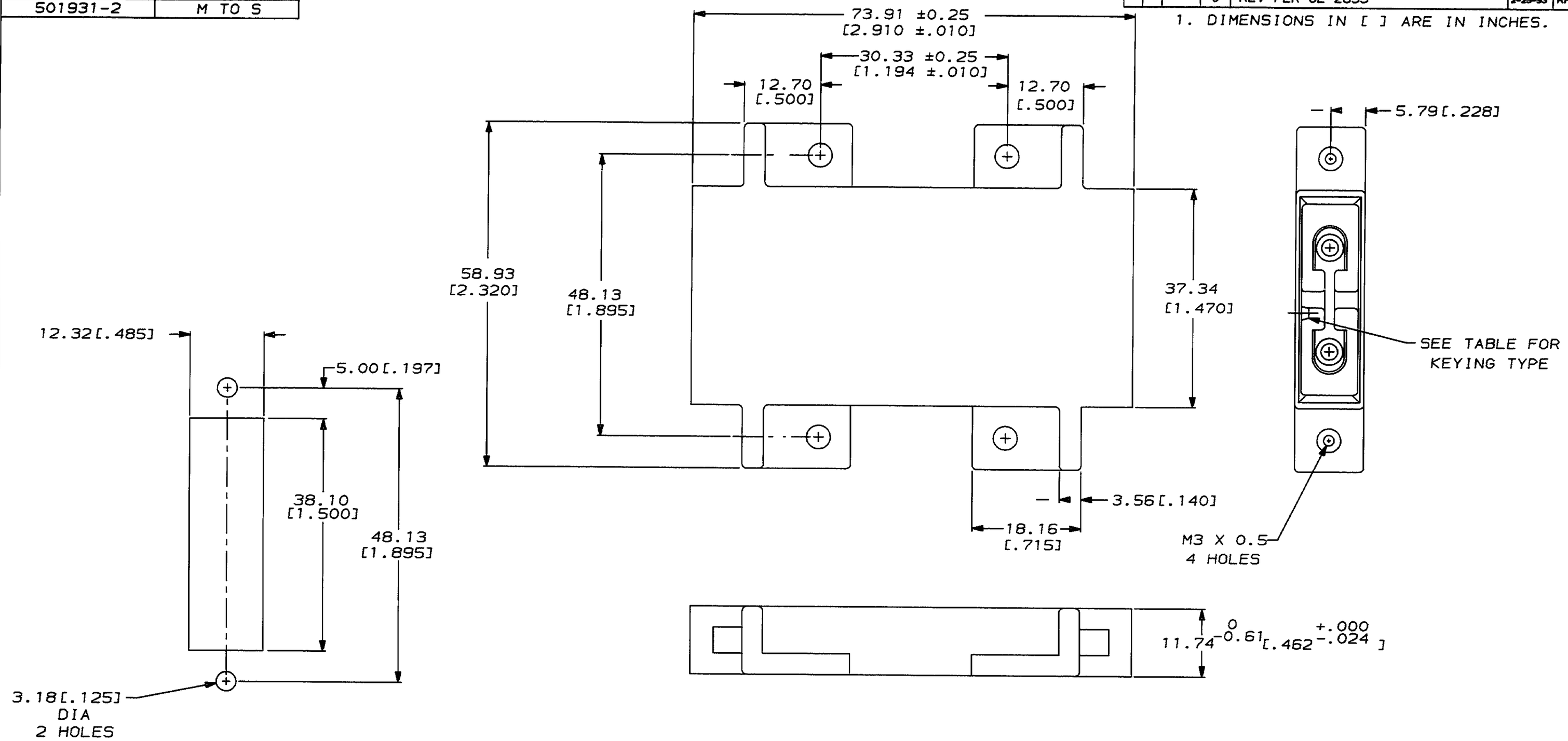

SUGGESTED MOUNTING PATTERN

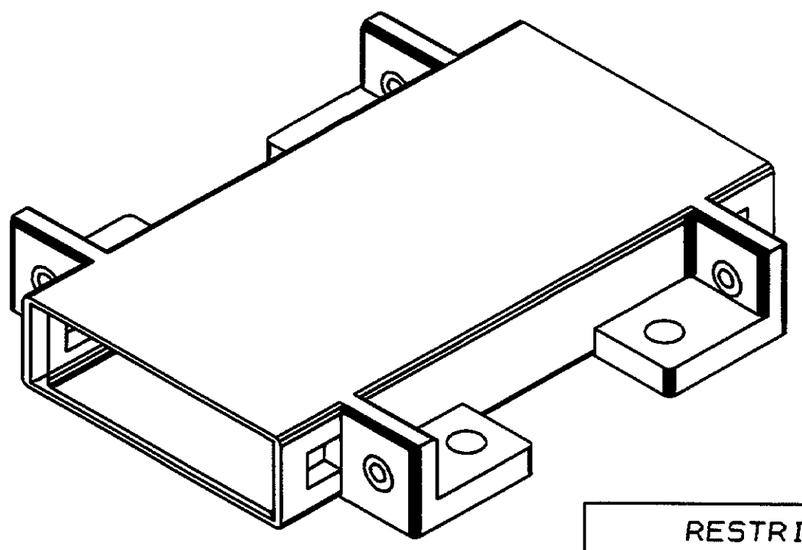

METRIC

RESTRICTED RELEASE
DRAWING MAY CHANGE WITHOUT
CUSTOMER NOTIFICATION

DO NOT SCALE PRINT.
UNLESS SPECIFIED
DIMENSIONS IN mm
TOLERANCES ON :
2 PLC DEC ± 0.13[.005]
3 PLC DEC ± -
ANGLES ± -

MATERIAL: PBT MOLDING COMPOUND

FINISH: -

DR	5-13-88	B.BRIGGS
CHK	5-19-88	J.ZEIDERS
APPD	5-20-88	L.BUDD
APPD	5-20-88	D.THOMPSON
PRODUCT SPEC	-	
APPLICATION SPEC	-	
WEIGHT	-	

PART NO

AMP INCORPORATED
Harrisburg, Pa. 17105

NAME: DUPLEX TO DUPLEX COUPLING ASSEMBLY, WITH MOUNTING EARS, WITH M3 THD INSERTS, AMP FSD

SIZE	FSCM NO	DRAWING NO
C	00779	501931
SCALE 2:1		SHEET 1 OF 1

501931

CUSTOMER DRAWING

AMP 1471-6 REV 3-87

15-APR-93 08:54:08 amp26400 /files/wip/amp26400/edmmod