THIS DRAWING IS UNPUBLISHED. RELEASED FOR PUBLICATION -,- .
© COPYRIGHT - By - ALL RIGHTS RESERVED.

LOC	DIST
AF	50

REVISIONS

P	LTR	DESCRIPTION	DATE	DWN	APVD
	G1	ECR-17-008070	05/06/17	GG	TD

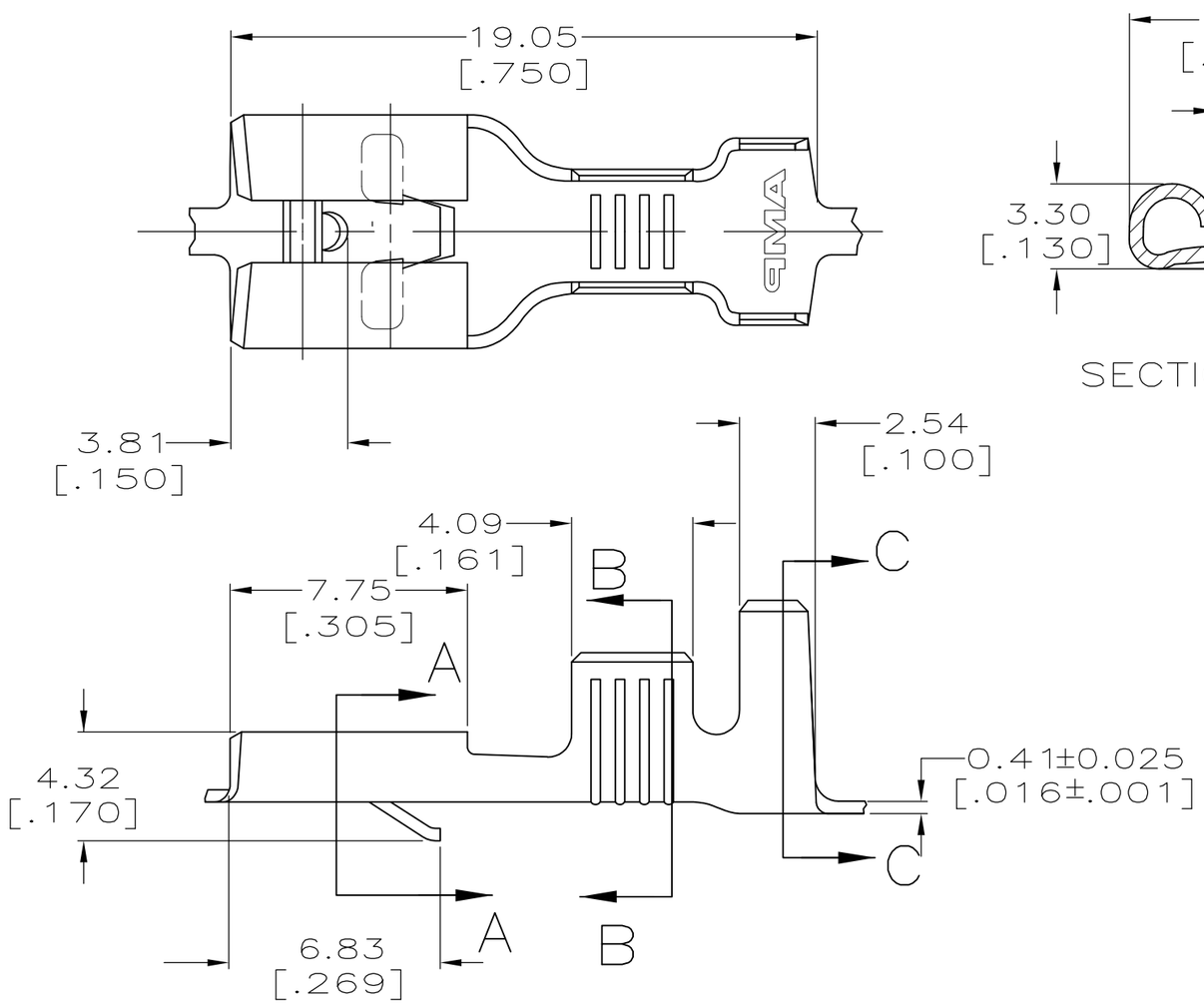

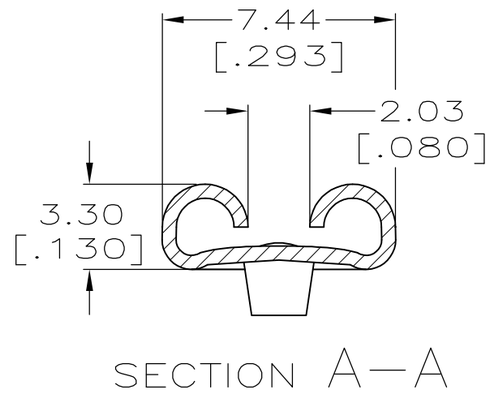

1. CONTINUOUS STRIP ON REELS.
2. ACCEPTS WIRE SIZE [#16–#12 OR TWO #16'S].
3. INSULATION RANGE TO BE 4.06–5.33 [.160–.210] OR TWO 3.30 [.130] MAX DIA.
4. MATING TAB THK IS 0.81±0.025 [.032±.001].
5. INTERLEAVING PAPER REQUIRED.
6. PRELIMINARY – NOT FOR PRODUCTION

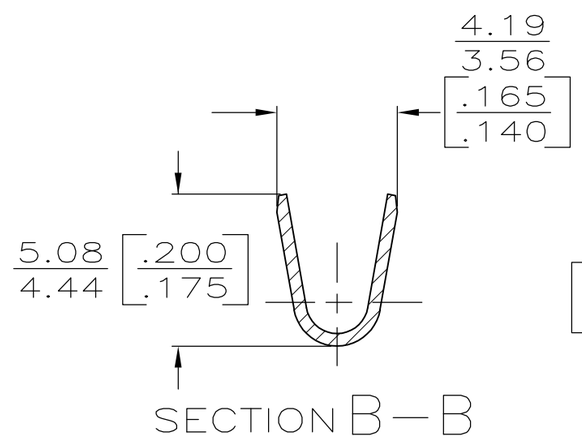

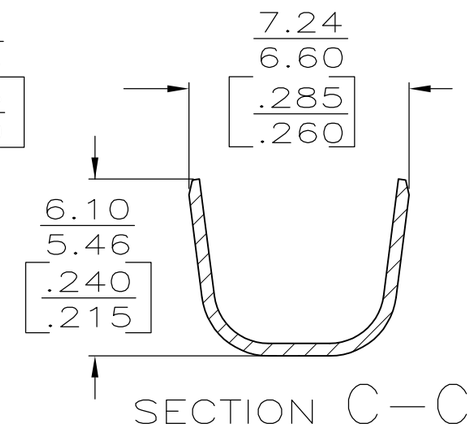

5	0.002032 [.000080] MIN TIN	6 60249–5
	0.000381 [.000015] THK SILVER	60249–3
	TIN	60249–2
	–	60249–1
	FINISH	PART NO

APPLICATOR DATA

CRIMP	SIZE	TYPE
WIRE	3.05 mm [.120]	F
INSUL	6.35 mm [.250]	F

WIRE SIZE	CRIMP HEIGHT mm [INCH]
12 AWG	2.18+/-0.05 [.086+/-.002]
2x16 AWG	2.03+/-0.05 [.080+/-.002]
14 AWG	1.85+/-0.05 [.073+/-.002]
16 AWG	1.65+/-0.05 [.065+/-.002]

THIS DRAWING IS A CONTROLLED DOCUMENT.

DIMENSIONS: INCHES

TOLERANCES UNLESS OTHERWISE SPECIFIED:
0 PLC ± –
1 PLC ± –
2 PLC ± 0.38 [.015]
3 PLC ± –
4 PLC ± –
ANGLES ± –

MATERIAL: BRASS

FINISH: SEE TABLE

DWN	JR RUTH	7/14/95
CHK	MS FEHER	7/14/95
APVD	J GILLESPIE	7/14/95
PRODUCT SPEC	—	
APPLICATION SPEC	114–2025	
WEIGHT	—	

TE Connectivity

NAME: RECEPTACLE, FASTIN–FASTON, 6.35 [.250] SERIES

SIZE	CAGE CODE	DRAWING NO	RESTRICTED TO
A3	00779	C-60249	—

CUSTOMER DRAWING | SCALE 5:1 | SHEET 1 OF 1 | REV G1