Alle Rechte vorbehalten/ *All rights reserved*

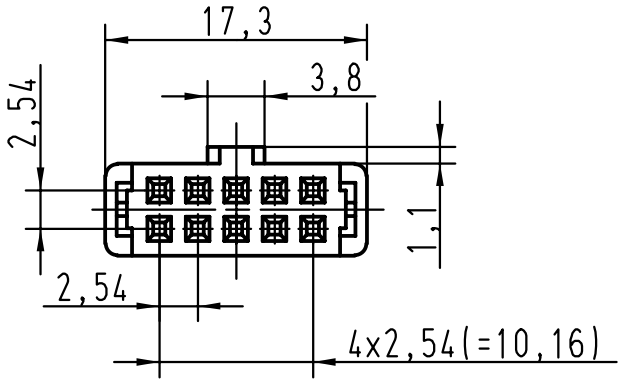


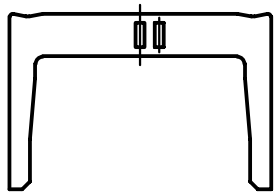

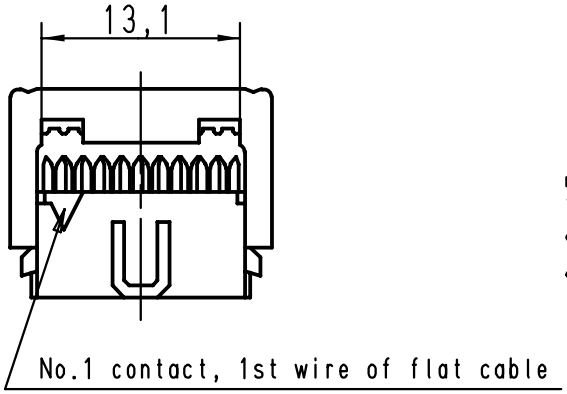


*pre assembled*

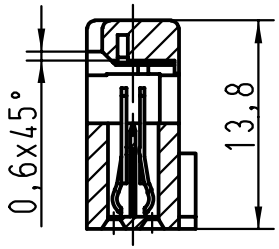


*fitted*

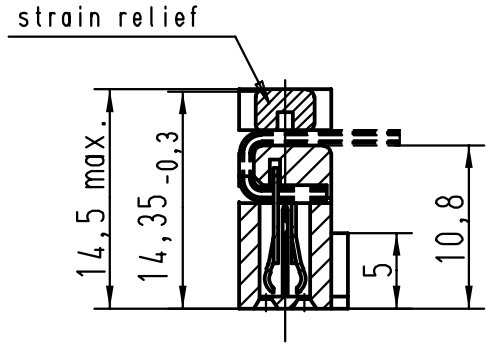


| | | | | | |
|---|---|---|---|---|---|
| 09185105814 | 0,76 µm Au | | | | |
| 09185106814 | 2 | | | | |
| 09185107814 | 3 | | 29757 | 25-MAR-02 | CV |
| *Part-No.* | *performence level* | | Mod. | Dat. | Name |

| | Dat. | Name |
|---|---|---|
| Detail. | 25-MAR-02 | CV |
| Insp. | | |
| Stand. | | |

All Dim. in mm
Orig. Size DIN A 4

HARTING EURL
F-95972 Paris

SEK 18 Female connector
10 poles with central polarisation, closed end cover and strain relief

Maßstab/ *Scale* 2:1

TB 0918510X814

Sub.

Blatt/ *Page* 1