THIS DRAWING IS UNPUBLISHED. RELEASED FOR PUBLICATION -,- .
© COPYRIGHT - BY TYCO ELECTRONICS CORPORATION. ALL RIGHTS RESERVED.

LOC	DIST
FX	00

REVISIONS

P	LTR	DESCRIPTION	DATE	DWN	APVD
	0	EC 0KTB-0017-03	11JUN03	JRB	DMR

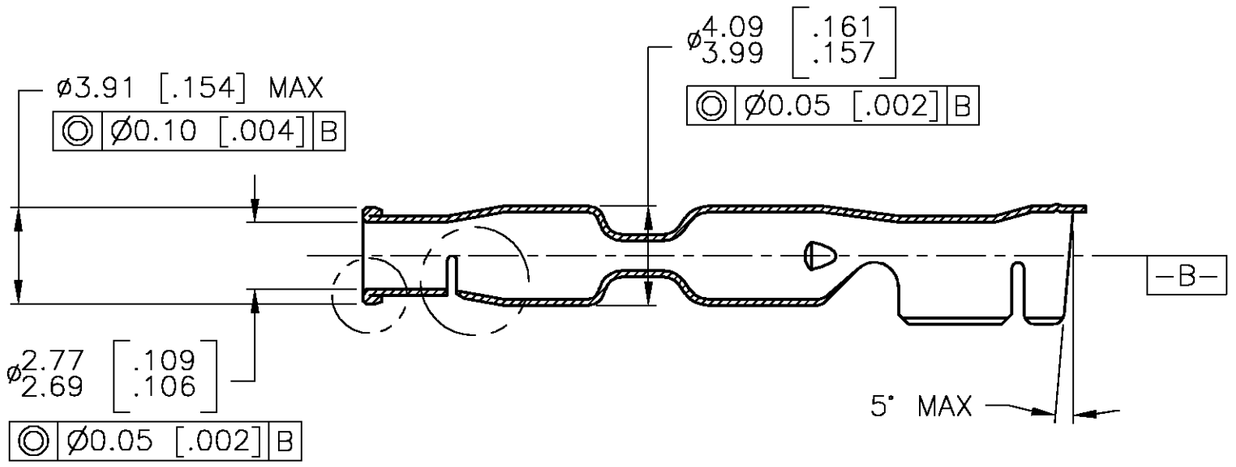

SECTION A-A

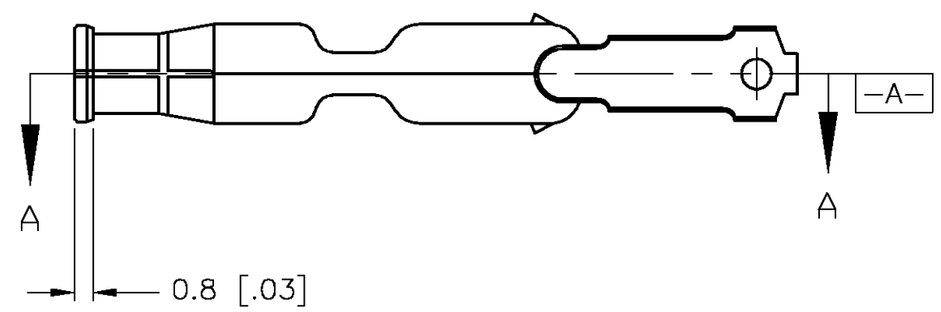

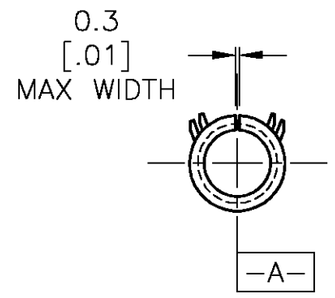

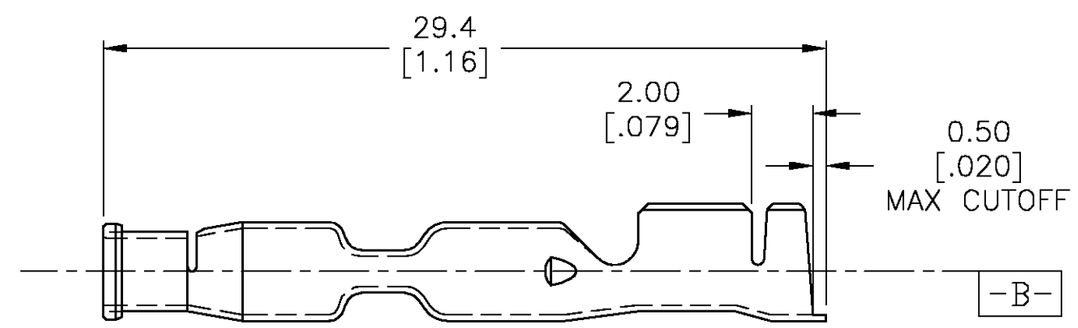

1. MATERIAL: CA260 BRASS
2. FINISH: H.T.D. PER FORD SPEC. E5B-M1P9-A

GRIP CODE	FINISH	MATERIAL	FORD NUMBER	TYCO NUMBER
—	—	—	—	
14	H.T.D.	CA260	E8EB-14488-ADA	3-1438245-2
18	H.T.D.	CA260	E7EB-J4488-SA	3-1438245-1

THIS DRAWING IS A CONTROLLED DOCUMENT.

DIMENSIONS: MM

TOLERANCES UNLESS OTHERWISE SPECIFIED:
0 PLC ± –
1 PLC ± –
2 PLC ± 0.10
3 PLC ± ---
4 PLC ± –
ANGLES ± 1°

MATERIAL –
FINISH –

DWN JR BUSSARD 11 JUNE 2003
CHK DM REVAK 11 JUNE 2003
APVD DM REVAK 11 JUNE 2003
PRODUCT SPEC –
APPLICATION SPEC –
WEIGHT –

Tyco Electronics Corporation
Harrisburg, PA 17105-3608

NAME CONNECTOR – SUBMERSE LOCK WEDGE (FEMALE) –

SIZE	CAGE CODE	DRAWING NO	RESTRICTED TO
A2	00779	C-1438245	–

CUSTOMER DRAWING | SCALE 4:1 | SHEET 1 OF 1 | REV 0

1438245

AMP 1471-9 REV 31MAR2000

H:\ACADmod\ECNs\