SPECIFICATIONS

MINI PCI Express Socket

AS Series
6.8mm Height SMT Type
0.80mm [.031"] Pitch
52 Pos. CLIP

Mechanical
Contact Retention Force: *N/A*
Durability : *25 Cycles*

Electrical
Voltage Rating: *N/A*
Current Rating: *N/A*
Contact Resistance: *N/A*
Dielectric Withstanding Voltage: *N/A*
Insulation Resistance: *N/A*

Physical
Cap: *Thermoplastic, UL 94V-0 rated in Ivory Color*
Metal Spring: *Stainless steel*
Plating: *See "ORDERING INFORMATION"*
Operating Temperature: *-40℃ to +85℃*

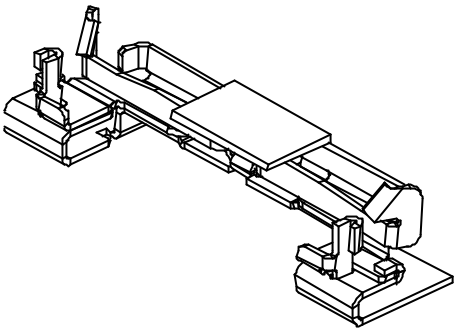

DRAWING

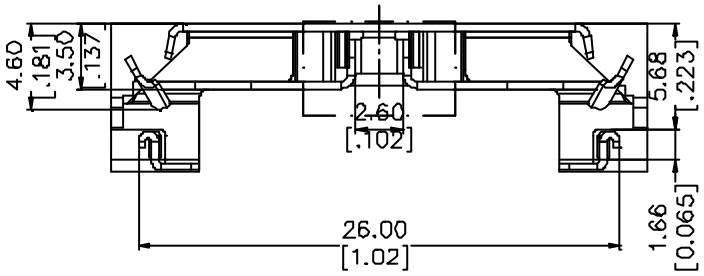

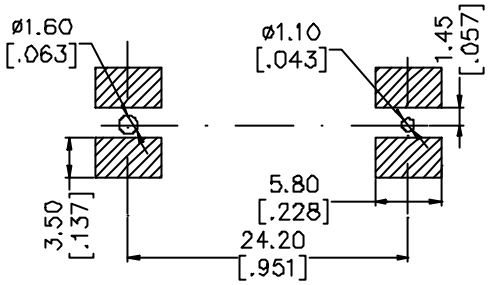

RECOMMENDED P.C.B LAYOUT

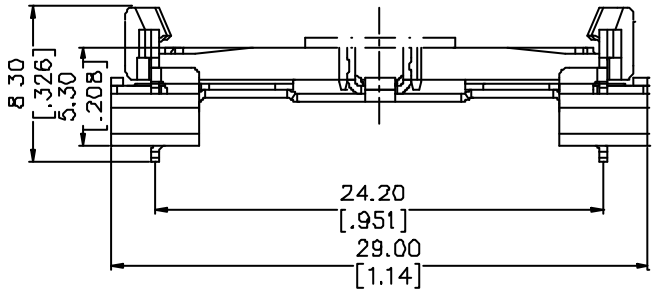

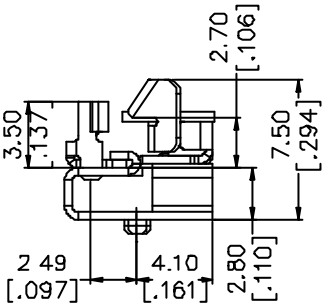

ORDERING INFORMATION

PRODUCT NO.: A S 0 B2 2 6 - S 68 K - * F

- Memory Module Socket
- Horizontal Type
- Single Row
- No. of Pos. — B2=52 Pos.
- SMT Type
- Contact Area Plating — 6=10u" Gold
- Short Body
- 68=6.8mm Height
- Only Clip
- 4=Soft Tray / 7=Tape Reel
- Lead Free

All specification & dimensions are subject to change, please call your nearest Foxconn sales representative for update information.