# HEXSEAL® & E-SEEL®

## Hermetic Environmental Sealing Boots for Switches & Potentiometers

**APM HEXSEAL®**

**SWITCH SEALING SPECIALISTS**

# Table of Contents

Matching Colors Available

Armored Versions

EMI/RFI Suppression Versions

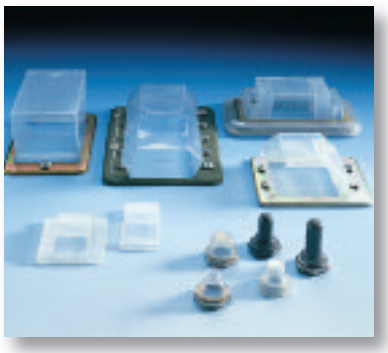

Circuit Breaker Boots –
See Catalog CB200


Why Hostile Switch Environments Need Protection . . . . . 3

Typical Applications – Features & Benefits . . . . . 4

Cross References . . . . . 5, 6

N.S.N. Series to APM P/N & Military Specifications . . . . . 6

Anatomy of a Hermetic Sealing Boot . . . . . 7

3 Performance Levels to Choose From . . . . . 7

Technical References . . . . . 8, 9

Toggle Switch Boots Specifications & Selection (Full & Half) . . . . . 10

IQ Series Toggle Switch Boots . . . . . 10a

Armored Toggle Switch Boots ( Full) . . . . . 11

EMI/RFI Shielded Toggle Switch Boots (Full) . . . . . 11

Back-of-Panel Mounted Toggle Switch Boots . . . . . 11

Pushbutton Switch Boots (Full) . . . . . 12, 13

Armored Pushbutton Switch Boots (Full) . . . . . 13

EMI/RFI Shielded Pushbutton Boots (Full) . . . . . 13

Back-of-Panel Mounted Pushbutton Switch Boots . . . . . 13

Indicator & Illuminated Pushbutton Switch Boots . . . . . 14

2-Way Radio Handset Switch Boots . . . . . 14

Rotary-Shaft Seals for Switches & Potentiometers . . . . . 15

EMI/RFI Shielded Rotary-Seals for Switches & Potentiometers . . . . . 15

Locking Rotary-Shaft Seals . . . . . 15

Sealed Switches Bushing Sealing Washers* . . . . . 16

Rocker Switch Boots . . . . . 17

Economy Switch Boots . . . . . 18

Installation Instructions – Bushing Adaptors . . . . . 19

Custom Capabilities . . . . . 20


*Designed Specifically to Protect Mounting Hole Seal Integrity of Hermetically Sealed Switches

© APM Hexseal Corp. 2008

# HEXSEAL® & E-SEEL® SEALING BOOTS – LIFE SUPPORT SYSTEMS FOR SWITCHES

## Why hostile switch environment protection is needed

Unsealed switches are internally susceptible to damage and shorting from water, lubricants, dust, dirt, sand, salt spray, corrosive atmospheres, fungus and other damaging contaminants. Even factory sealed switch function is susceptible to ice and dust build-up. And, all switch panel-mounting cutouts are vulnerable to contaminant seepage including spilled soft drinks, coffee, etc. APM's UL-recognized HEXSEAL® and E-SEEL® sealing boots provide complete and reliable, cost-effective, long-term protection.

Toggle, Pushbutton, Rocker, Rotary Actuated Sealing Boots

## How HEXSEAL® & E-SEEL® Boots protect

Working closely with switch, potentiometer and circuit breaker manufacturers and users for more than 60 years, APM has developed an extensive line of tough, pliant silicone rubber panel seals that function harmoniously with the switch's manual and automatic operation and position status viewing. Our panel seals are UL 50 tested and Recognized. In this age of recalls and expensive field servicing, installing a HEXSEAL boot is the most effective and least expensive way to protect and guard against switch, circuit breaker and potentiometer failures.

## NEMA Mounted Enclosure Example – Switch & Circuit Breaker Boots

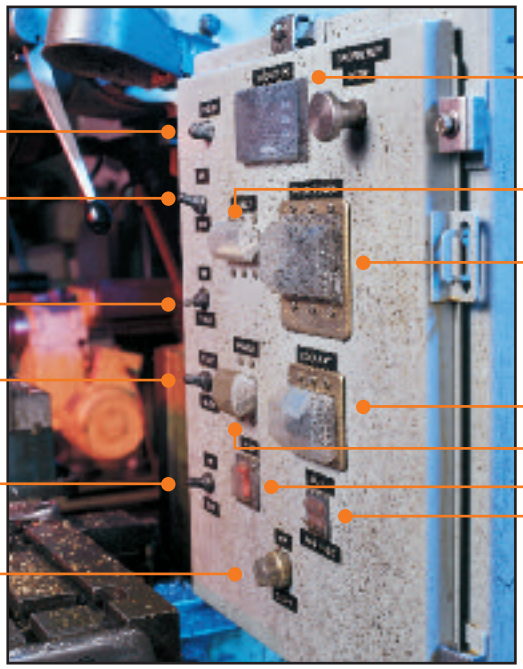


### Color Matching

### All standard EMI/RFI boots feature a knitted Monel shield

**REMOTE** HEXSEAL® boots protect switch, potentiometer & circuit breaker mechanisms from degradation due to harsh environments such as salt air/water, oils, dust and ice.

**EXTREME** HEXSEAL® boots will protect switches and keep them functioning to temperatures down to -94°F (-70°C).

# Typical Applications

- Marine instrument panels
- Military equipment and vehicles
- Food processing equipment
- Air conditioning systems
- Heat pumps
- Off-road construction equipment
- Machine tool controls
- Spas/hot tubs
- Commercial laundry equipment
- Construction elevator controls
- Waste treatment system controls
- Chemical plant process controls
- Paint spraying equipment
- Industrial machinery
- Medical electronic equipment
- Ground support equipment
- Electronic/electrical instrument control panels
- Emergency power equipment
- Outdoor compressor/pump controls
- Transport refrigeration systems
- Automotive diagnostic equipment
- Lighting control centers
- Commercial refrigeration systems
- Or any application requiring environmental protection for switches.

***Learn how others apply HEXSEAL® Switch Boots – visit our website "Sealing Solutions" application notes.***

**RUGGED** HEXSEAL® boots are used for controls protection in industrial, manufacturing and processing plants — hostile conditions which are dusty, dirty, greasy and corrosive.

**RELIABLE** Surgery rooms and food processing plants require frequent wash downs. Their switches benefit from HEXSEAL® IP66-68 Rated boots by maintaining dry, clean reliable performance.

# Features & Benefits

- **Exclusive UL-Recognized HEXSEAL® & E-SEEL® Boots** … facilitate easier "agency approval" of the equipment in which they are used. No other competitive seals in the world have these approvals.
- **Third party inspection** … UL regularly inspects our facilities and products.
- **Military Specifications** … most HEXSEAL® Boots are produced to meet MIL-B-5423 (see product pages specification charts).
- **Time Tested** … since our original patents and for more than 60 years, millions of HEXSEAL® Boots reliably function in hostile conditions throughout the world.
- **Transparent RUBRGLAS® (indicators) rugged silicone rubber material** … resists tearing and most hostile environmental contaminants. Retains tactile feel, will not discolor, yellow, crack or dry out due to UV/aging.
- **Choose precise boot color for color matching** … to match panel and/or delineate function – identification.
- **DFARS compliant**
- **RoHS compliant** … per document 2002/95/EC
- **Patented perimeter sealing rib** … seals the switch/circuit breaker panel-mounting cutout, preventing contaminant seepage.
- **Toggle actuated boots feature secondary inner seal** … to protect against contaminant entry in the event the upper chamber portion is punctured. And, also protects against differential pressure. (See figure 1.)
- **All toggle and pushbutton boots feature high-strength rubber-to-metal bond** … cross-linking adhesion assures rubber will not separate from the mounting nut.
- **Pre-lubricated (optional) half-toggle and full-toggle boots** … assure easier installation on large diameter actuators.
- **Designed and made in USA** … to insure high, consistent quality with local full tech service backup.
- **Custom design requirements welcome** … in addition to standard products described in this catalog, APM provides technical design assistance with fast, economical prototyping.

# CROSS REFERENCES — UNSEALED SWITCHES

**(Partial list — consult factory for additional listings for these and other manufacturers)**

## Toggle Switches

| APM Hexseal P/N* | Carlingswitch | E-Switch | Cutler Hammer | Gaynor | Siemens | Airpax | Honeywell | ITT (C&K) | APEM | Eaton |
|---|---|---|---|---|---|---|---|---|---|---|
| **Boots** | **Toggle Switches** | | | | | | | | | |
| ***Your choice of...***<br>Full-toggle boot:<br>(15/32-32 Thread)<br>N1030<br>IN1030<br>IQ1030<br>C1131/27<br>C1131/28<br>***or***<br>Half-toogle boot:<br>(15/32-32 Thread)<br>N1030B<br>C1132/20 | I & G Series with 52, 63, or 73 style toggle actuator<br>F Series with 22, 62, 63, or 73 style toggle actuator<br>H Series with 63 or 73 style toggle actuator<br>C Series with 52 or 73 style toggle actuator<br>110/216 Series with 21, 22, 52, 63, / 73 style toggle actuator ( Model Numbers: 110, 111, 112, 160, 216, 316, & 516)<br>D Series<br>DK/EK Series with 32, 72, or 73 style toggle actuator | 100 Series W/T7 actuator<br>100 Series W/T8 actuator | 8690K1/K2<br>73xxK Series through 76xxK Series<br>82xxK Series<br>83xxK Series | 6600 Series<br>7000 Series<br>7100 Series<br>7200 Series<br>9000 Series<br>9100 Series<br>9200 Series | W31 Series | AP12 Series<br>AP112 Series (Requires APM adt Bushing 2500/1/5, 15/32-32 to 3/8-32)<br>B1/B2 Series (Snapak) (Requires APM boot with 1/2-32 threaded insert) | NT Series (Non-locking Actuator) | 7000 -T & T1 Series (15/32-32 Thread)<br>9000 -T & T1 Series (15/32-32 Thread) | ST2 Series | 8510 - 8512 Series<br>8520 - 8522 Series<br>8526 - 8528 Series<br>8566 - 8568 Series<br>8530 - 8532 Series<br>8533 - 8535 Series<br>8500 - 8502 Series<br>8570 - 8572 Series<br>A3-200 Series<br>A3-210 Series<br>8836 - 8838 Series<br>8843 - 8845 Series<br>8866 - 8869 Series |

## Locking Toggle Switches

| APM Hexseal P/N* | Honeywell | Eaton |
|---|---|---|
| **Boots** | **Locking Toggle Switches** | |
| Locking Toggle Boots:<br>(15/32-32 Thread)<br>1132/31<br>C1132/26 | 11TW1-2 Series<br>11TW1-3 Series<br>11TW1-8 Series<br>12TW1-2 Series<br>12TW1-3 Series<br>12TW1-8 Series<br>2LT1 Series | 8536 - 8538 Series<br>8503 - 8505 Series<br>8573 - 8575 Series<br>8505A3-213 Series<br>8505A3-209 Series<br>8836 - 8838 Series<br>8843 - 8845 Series<br>8855 Series<br>8866 - 8869 Series |

## Rocker Switches

| APM Hexseal P/N | Compatible with these Rocker Switch Manufacturers (Partial List) |
|---|---|
| C1111/7 | Consult Factory |
| C1113/62 | Arrow Hart – 2600 Series |
| C1113/63 | Arrow Hart – 2600 Series |
| C1113/66 | Carlingswitch #621 |
| C1113/70 | Carlingswitch RSC Series |
| C1113/71<br>C1113/80 | Carlingswitch M Series<br>Airpax R11<br>Eaton/Heinemann LC-1<br>Siemens W-33<br>Carling LTI6 |
| C1113/75 | Carlingswitch M Series<br>Airpax R21<br>Eaton/Heinemann LC-2 |
| C1213/53<br>C1213/60 | Oslo S Series<br>Oslo S Series |

*For metric sizes consult factory.

DFARS Compliant

RoHS Compliant

## Rotary Switches

| APM Hexseal P/N* | Grayhill | Honeywell-Clarostat |
|---|---|---|
| **Rotary Shaft Seals** | **Rotary Switch Series** | |
| N9042x1/8<br>1/4-28 thd. | STD. 1/8 (.125) shaft<br>50 std, 51 std, 56 std., 26, 51 | |
| N9030x1/4<br>3/8-32 thd.<br>(M5423/09-02) | 1/4 (.250) shaft<br>19, 24, 50,51, 5000, 71B, 71MB, 71BF, 71MBF, 62A, 62V, 62D, 62F, 62R, 61A, 61B, 61C, 61S (.250 shaft), 61K, 61R, 61Z, 25, 25L, 71 (.250 shaft), 42, 43, 44, 54, 53, 57, 59 | 1/4 (.250) shaft<br>H - CL Series<br>73, 308, 309, 380C3, 600EN |
| N9030x1/8<br>3/8-32 thd.<br>(M5423/09-01) | | 1/8 (.125) shaft<br>388L, RA10L, RA20L, RV4L, RV6L, 308L, 309L |
| N9040x1/8<br>1/4-32 thd.<br>(M5423/09-03) | 1/8 (.125) shaft<br>71A, 71MA, 71AF, 71MAF, 71BT, 61M, 61S (.125 shaft), 71 (.125 shaft), 08, 09 | 1/8 (.125) shaft<br>388N, 389N, 392, 308N, 309L, RA10N, RA20N, RV4N, RV6N |
| N9063x1/4<br>1/2-32 thd.<br>(M5423/09-06) | 1/4 (.250) shaft<br>63K, 63R | |

## Pushbutton Switches

| APM Hexseal P/N* | Eaton | | Carling | Gaynor | Siemens | NKK |
|---|---|---|---|---|---|---|
| **Pushbutton Boots** | **Pushbutton Switch Series** | | | | | |
| Pushbutton boots:<br>(15/32-32 Thread or 7/16-28 Thread)<br>NC3030, C1231/42 | 7835 K 12A, 7836 K 11B<br>8411/K7/K8/K12, 8418/K2/K12<br>8432, 8433, 7193/K101<br>8943/K28/K29, 8980/K202<br>7228K2, 7227K2, 7229K2 | | 16-3P, 170/172<br>110/316P, 641 | 6611, 6612<br>6616, 6617<br>7000, 7100 | W58 - 4<br>W58 - 1 | MB2000<br>SB 265<br>SCB - 2A |
| Pushbutton boots:<br>(15/32-32 Thread or 7/16-28 Thread )<br>N3030<br>C1231/41 | **Eaton** | **Carling** | **Siemens** | **Honeywell** | **APEM** | **C&K** |
| | 8440<br>8411 K5/K13<br>8418 K1/K11<br>8448 K1/K2<br>8943 K28/K29 | "P"<br>P26<br>P27 | W58 - 4<br>W58 - 1<br>W58 Series (15/32-32 Thread or 7/16-28 Thread) | 2PB Series (15/32-32 Thread) | 300 Series (With T1 option) | 8500M<br>8500S<br>8500T |

**NOTE:** 7/16-28 thread needs to be requested where required for proper fit. M12 thread needs to be requested where required for proper fit as well.

# CROSS REFERENCES — UNSEALED SWITCHES

(Partial list — consult factory for additional listings for these and other manufacturers) (Continued)

## Toggle Switches

| APM Hexseal P/N* | Eaton | Carling | Gaynor | Siemens | NKK | Honeywell | APEM | ITT (C&K) |
|---|---|---|---|---|---|---|---|---|
| PUSHBUTTON BOOTS | Pushbutton Switch Series | | | | | | | |
| Pushbutton boots: (15/32-32 Thread or 7/16-28 Thread) NC3030 C1231/42 | 7835 K 12A, 7836 K 11B, 8411/K7/K8/K12, 8418/K2/K12, 8432, 8433, 7193/K101, 8943/K28/K29, 8980/K202, 7228K2, 7227K2, 7229K2 | 16-3P 170/172 110/316P 641 | 6611, 6612, 6616, 6617, 7000, 7100 | W58 - 4 W58 - 1 | MB2000 SB 265 SCB - 2A | | | |
| Pushbutton boots: (15/32-32 Thread or 7/16-28 Thread ) N3030 C1231/41 | 8440 8411 K5/K13 8418 K1/K11 8448 K1/K2 8943 K28/K29 | "P" P26 P27 | | W58 - 4, W58 - 1 W58 Series (15/32-32 Thread or 7/16-28 Thread) | | 2PB Series (15/32-32 Thread) | 300 Series (With T1 option) | 8500M 8500S 8500T |

*For metric sizes consult factory.

# SEALED SWITCHES

## Panel Bushing Washer

| APM Hexseal P/N | APEM | Honeywell | Eaton | ITT (C&K) |
|---|---|---|---|---|
| SEALING WASHERS | Sealed Toggle Switches | | | |
| Compatible Switch Bushing 15/32-32 | ST1-1KM4 & M5 Series ST1-2KM4 & M5 Series ST1-3KM4 & M5 Series ST1-4KM4 & M5 Series ST1-5KM4 & M5 Series | 11TW1-2 Series 11TW1-3 Series 11TW1-8 Series (With Suffex D, F, G) | 8510 - 8512 Series 8520 - 8522 Series 8526 - 8528 Series 8566 - 85 68 Series 8530 - 85 32 Series 8536 - 85 38 Series 8533 - 8535 Series 8500 - 8502 Series 8503 - 8505 Series 8570 - 8572 Series 8573 - 8575 Sereis | 7000 Series T and T1 Miniature Toggle Switches |
| 60064 Diameter .677" Thickness .120" | ST2-1KM4 & M5 Series ST2-2KM4 & M5 Series ST2-3KM4 & M5 Series ST2-4KM4 & M5 Series ST2-5KM4 & M5 Series ST2-6KM4 & M5 Series ST2-7KM4 & M5 Series ST2-8KM4 & M5 Series | 12TW1-2 Series 12TW1-3 Series 12TW1-8 Series (With Suffex D, F, G) 11ST Series 1TL1 Series 2TL1 Series 4TL1 Series | A3-209 Series A3-210 Series 8836 - 8838 Series 8843 - 8845 Series 8866 - 8869 | |
| 60225 Diameter .665" Thickness .110" | | | | |

## Cross Reference
## N.S.N. Series to APM Part Numbers

| Series | Item Description |
|---|---|
| 5305- | Self-Sealing Fasteners – Screws |
| 5306- | Self-Sealing Fasteners – Bolts |
| 5309- | Self-Sealing Fasteners – Bolts |
| 5310- | Switch Sealing Boots |
| 5320- | Self-Sealing Fasteners – Rivets |
| 5325- | Switch Sealing Boots |
| 5330- | Switch Sealing Boots |
| 5340- | Circuit Breaker Boots |
| 5925- | Circuit Breaker Boots |
| 5930- | Switch Sealing Boots |
| 5975- | Switch Sealing Boots |
| 5999- | EMI/RFI Suppression Switch Sealing Boots |
| 6210- | Incandescent Lamp Filters |
| 6220- | Incandescent Lamp Filters |

DFARS Compliant

RoHS Compliant

# Meets Military Specifications**

| Government Designation | APM Part Number | Government Designation | APM Part Number |
|---|---|---|---|
| M5423/01-01 | N-1030 | M5423/09-07 | N9030 1/8 RF1 |
| M5423/01-02 | IN1030RFI | M5423/09-08 | N9030 1/4 RF1 |
| M5423/02-01 | N-1030B | M5423/09-09 | N9040 1/8 RF1 |
| M5423/03-01 | 2030-B | M5423/09-10 | N9060 1/4 RF1 |
| M5423/04-01 | N-5030 | M5423/09-11 | N9065 x 3/8 RF1 |
| M5423/05-01 | N-5030L | M5423/09-12 | N9063 1/4 RF1 |
| M5423/05-02 | N-5030R | M5423/09-14 | N9033 1/4 RF1 |
| M5423/06-01 | 3070 | M5423/10-01 | N-5040G |
| M5423/06-02 | 3075 | M5423/10-02 | N-5040R |
| M5423/06-03 | 3073 | M5423/10-03 | N-5040 |
| M5423/06-04 | 3077 | M5423/11-01 | N-5032B |
| M5423/07-01 | N-3030 | M5423/12-A9 | 1112/7 |
| M5423/07-02 | NC-3030 | M5423/13-01 | HE1076 |
| M5423/07-03 | NH-3030 | M5423/13-02 | HE1077 |
| M5423/07-04 | N-3040 | M5423/13-03 | HE1075/3 |
| M5423/07-05 | NH-3030S | M5423/14-01 | HE1040 |
| M5423/07-06 | N-3030RFI | M5423/14-02 | HE1035 |
| M5423/07-07 | NC-3030RFI | M5423/14-03 | HE1070 |
| M5423/07-08 | NH-3030RFI | M5423/14-04 | HE1080 |
| M5423/07-09 | N-3040RFI | M5423/14-05 | HE1015 |
| M5423/07-10 | NH-3030SRFI | M5423/14-06 | HE1020 |
| M5423/07-11 | N-3030-2513 | M5423/14-07 | HE1050 |
| M5423/07-12 | NC-3030-2513 | M5423/14-08 | 1113/26 |
| M5423/09-01 | N-9030-1/8 | M5423/15-01 | 1211/13 |
| M5423/09-02 | N-9030-1/4 | M5423/15-02 | 1211/14 |
| M5423/09-03 | N-9040-1/8 | M5423/15-03 | 1211/31 |
| M5423/09-04 | N-9060-1/4 | M5423/16-01 | 60225 |
| M5423/09-05 | N-9065-3/8 | M5423/16-01 | 60064 |
| M5423/09-06 | N-9063-1/4 | | |

**APM's policy is to manufacture our HEXSEAL® sealing boots as defined by the requirements of MIL-Spec B-5423 which we regard as the standard for the switch, circuit breaker and potentiometer industry. These requirements were formulated based on our original patent.

DFARS material is standard on all boots.

Cage Code: 97539

# Anatomy of a Hermetic Sealing Boot

The cut-a-way of the boot shown contains an integral secondary seal (Fig. 1) that provides additional protection against differential pressure (inside equipment vs atmospheric) that compresses/seals the toggle-actuator. The secondary chamber also creates a second-barrier should the top half be breached or compromised in any way. All HEXSEALS and E-SEELS also feature our patented flange sealing rib to prevent leakage from seeping past the mounting hole.

Two mounting methods are offered. Our standard bonded nickel-plated brass mounting-nut which replaces the switches original exterior mounting-nut (which is discarded) and an optional method that uses a bonded aluminum IQ Concentro-Nut™ that fits over the original switch exterior mounting nut. The Concentro-Nut option is ideal for maintenance servicing applications where minimum switch disturbance is desirable.

The switch mounting holes on hermetically sealed switches also need environmental panel protection from possible contaminant seepage, i.e., moisture, dust, spilled coke and coffee, etc. For this reason, APM has developed a bonded silicone rubber-stainless steel switch bushing seal. This special seal, specifically designed for hermetically sealed switches, is superior to ordinary O-rings or washers and meets the stringent requirements of MIL B-5423/16-01, MS 25196, and is UL recognized.

## Protects an Unsealed Switch

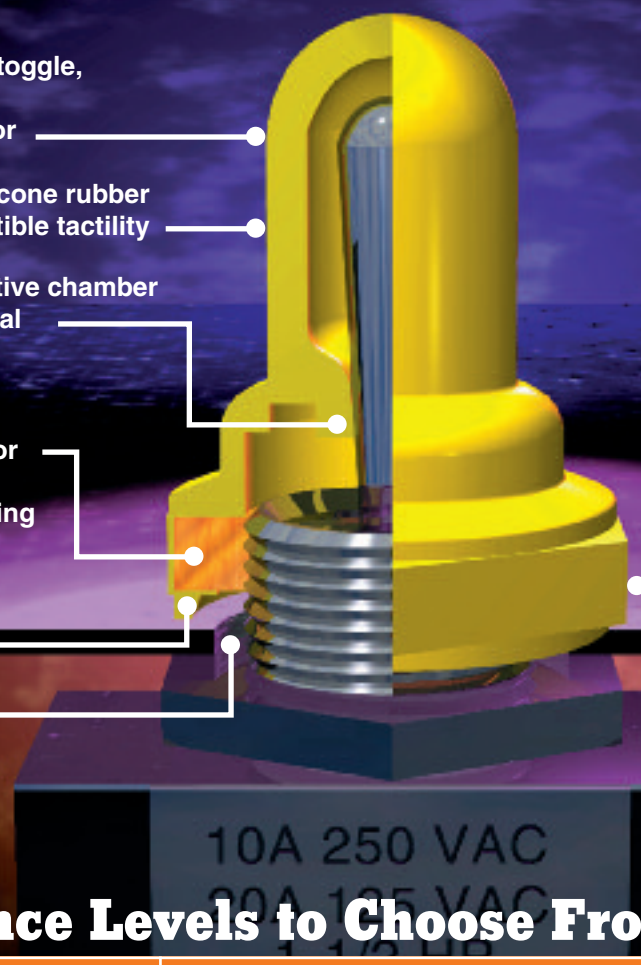

**Sealed switches require panel cut-out protection ...**

Bushing seal for protection of hermetically sealed switches

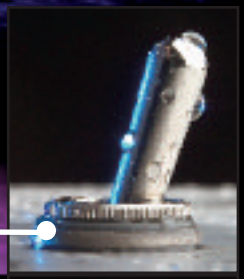

## 3 Performance Levels to Choose From

| SNAP-SEALS® | E-SEELS® | HEXSEALS® |
|---|---|---|
| **GOOD**<br>**• Commercial Grade •** | **BETTER**<br>**• Industrial Grade •** | **BEST**<br>**• Military Grade •** |
| • Neoprene rubber<br>• Two-piece design<br>• -65°F to +300°F (-53°C to +148°C) temperature range<br>• Suitable for some commercial and consumer applications including low-cost appliances and tools | • UL-recognized for US & Canada<br>• High tear-strength silicone rubber<br>• Single-piece construction<br>• -80°F to +400°F (-62°C to +204°C) temperature range<br>• Suitable for industrial and commercial applications | • High tear-strength silicone rubber per A-A-59588<br>• Single-piece design<br>• -94°F to +400°F (-70°C to +204°C) temperature range<br>• Suitable for military and industrial applications<br>• UL-recognized for US & Canada |

# Technical References

**SURVIVING HOSTILE CONTROL SYSTEM ENVIRONMENTS**

There is an IP-rated UL-recognized environmental sealing boot expressly designed for selected control components (e.g., switches, circuit breakers, potentiometers, panel meters) that mates with and will provide a number of benefits consistent with design considerations that comply with MIL-B-5423 specifications. Originally designed for U.S. military naval applications — rugged handling (with and without gloves), corrosive atmospheres, lubricant contact, frequent wash-downs — these sealing boots have repeatedly proven their battle-tested worthiness. By supporting all the major manufacturers of switches, potentiometers, and circuit breakers, the same protection and reliability are available for a wide spectrum of commercial and industrial switches through the APM HEXSEAL® and E-SEEL® sealing boot system. The following reference data and cross reference charts should be helpful in making your selection, however please do not hesitate to contact our sales support department for assistance.

**Enclosure Ratings**

To cost-effectively satisfy this application diversity, manufacturers of electrical/electronic equipment enclosures offer a range of products which provide varying degrees of environmental protection. In the interest of "standardizing" an electrical enclosure's performance, standards-making organizations such as NEMA, UL, CSA, and IEC have established various standards (Table 1).

Use of NEMA ratings does not require independent testing. Compliance is left to the manufacturer. On the other hand, UL conducts an independent evaluation of the submitted product. Tests are performed either at UL's laboratories or witnessed by UL engineers at the manufacturer's location. In addition, UL requires follow-up inspections (which may include testing) to assure adherence to prescribed materials and manufacturing procedures.

These ratings provide a quantitative measure of an enclosure's ability to operate in the environment in which it will be used. Each rating defines the degree of protection against rain, snow, sleet, wind-blown dust, hosedown, corrosive agents, and occasional submersion.

While the detailed wording of ratings from standard to standard varies, each is based on similar application descriptions and performance expectations (Table 2). For example, an enclosure meeting UL Standard 50, Type 6 ratings (and similarly NEMA Standard No. 250, Type 6) is designed for indoor and outdoor use. It provides the degree of protection against hosedown, icing, dust, and the entry of water during temporary submersion at the limited depth required for this rating.

**Table 1.**
**Selected Electrical Enclosure Standards**

- National Electrical Manufacturers Association NEMA Standards Publication No. 250, "Enclosures for Electrical Equipment"
- National Electrical Manufacturers Association NEMA Standards Publication No. ICS6, "Enclosures for Industrial Controls and Systems"
- Underwriters Laboratories Inc. UL 50, "Standard for Safety, Enclosures for Electrical Equipment"
- Underwriters Laboratories Inc. UL 508, "Standard for Safety, Industrial Control Equipment"
- Canadian Standards Association CSA Standard C22.2 No. 94 "Industrial Control Equipment for Use in Ordinary (Non-Hazardous) Locations"
- International Electrotechnical Commission, IEC 60529 (Ed. 2.1 b:2001) "Degree of Protection Provided by Enclosures (IP code)"

**Table 2. NEMA Enclosure Types**

| Type | Intended Use and Description for Electrical Equipment |
|---|---|
| 1 | Indoor use primarily to provide a degree of protection against limited amounts of falling dirt. |
| 2 | Indoor use primarily to provide a degree of protection against limited amounts of falling water and dirt. |
| 3 | Outdoor use primarily to provide a degree of protection against rain, sleet, windblown dust and damage from external ice formation. |
| 3R | Outdoor use primarily to provide a degree of protection against rain, sleet, and damage from external ice formation. |
| 3S | Outdoor use primarily to provide a degree of protection against rain, sleet, windblown dust and to provide for operation of external mechanisms when ice laden. |
| 4 | Indoor or outdoor use primarily to provide a degree of protection against windblown dust and rain, splashing water, hose-directed water and damage from external ice formation. |
| 4X | Indoor or outdoor use primarily to provide a degree of protection against corrosion, windblown dust and rain, splashing water, hose-directed water and damage from external ice formation. |
| 5 | Indoor use primarily to provide a degree of protection against settling airborne dust, falling dirt, and dripping noncorrosive liquids. |
| 6 | Indoor or outdoor use primarily to provide a degree of protection against hose-directed water, and the entry of water during occasional temporary submersion at a limited depth and damage from external ice formation. |
| 6P | Indoor or outdoor use primarily to provide a degree of protection against hose-directed water, the entry of water during prolonged submersion at a limited depth and damage from external ice formation. |
| 12 | |
| 12K | Indoor use primarily to provide a degree of protection against circulating dust, falling dirt, and dripping noncorrosive liquids. |
| 13 | Indoor use primarily to provide a degree of protection against dust, spraying of water, oil, and noncorrosive coolant. |

| UL/NEMA Rating | Nearest Equivalent IP Code |
|---|---|
| 1 | IP 20 |
| 2 | IP 22 |
| 3 & 3S | IP 55 |
| 3R | IP 24 |
| 4 & 4X | IP 66 |
| 5 | IP 53 |
| 6 | IP 67 |
| 6P | IP 68 |
| 12, 12K & 13 | IP 54 |
| IEC has no equivalents to UL/NEMA enclosure types 7, 8, 9, 10, or 11 | |

IEC enclosure protection requirements are defined in IEC 60529, Degree of Protection Provided by Enclosures (IP Code). This standard defines protection against hazardous contact by personnel and by entry of solids and liquids. Requirements for protection against corrosion and other in-use conditions are covered by the IEC standard for the overall product or by requirement specified by the user.

Within this context, Hexseals® and E-Seels® would have the following Maximum IP Rating:

| Hexseals® and E-Seels® for: | UL Recognized Ratings (to Std UL 50)* | IP Rating* |
|---|---|---|
| Toggle Boots | Types 1, 2, 3, 4, 4X 5, 6, 6P, 12, 12K, 13 | IP 66 / IP 68 |
| Pushbutton Boots | Types 1, 2, 3, 4, 4X 5, 6, 6P, 12, 12K, 13 | IP 66 / IP 68 |
| Rocker Switch Boots | Types 1, 2, 3R, 5, 12, 12K, 13 | IP 55 |

A dual IP code rating indicates protection against both water jets and water submersion. Rating a product for water immersion ("7" or "8" second digit) does NOT guarantee compliance against water jets from equipment hose down or equal in-use conditions.

***These ratings are based on standardized tests. APM recommends that the user review the actual installation for product suitability. APM welcomes the opportunity to work with the user to assist in finding the most cost-effective sealing solution.**

## IP CODE

**IEC 60529 DEGREES OF ACCESS TO HAZARDOUS PARTS, FIRST CHARACTERISTIC NUMERAL**

| IP | First Characteristic Numeral: With Respect to Solid Foreign Objects |
|---|---|
| 0 | Non-protected |
| 1 | Protected against solid foreign objects ≥ 50 mm diameter |
| 2 | Protected against solid foreign objects ≥ 12.5 mm diameter |
| 3 | Protected against solid foreign objects ≥ 2.5 mm diameter |
| 4 | Protected against solid foreign objects ≥ 1.0 mm diameter |
| 5 | Dust-protected (Dust shall not penetrate in quantity to interfere with satisfactory operation of the apparatus or to impair safety) |
| 6 | Dust-tight (No ingress of dust) |

**IEC 60529 DEGREES OF PROTECTION AGAINST WATER INGRESS, SECOND CHARACTERISTIC NUMERAL**

| IP | Second Characteristic Numeral: With Respect to the Harmful Ingress of Water |
|---|---|
| 0 | Non-protected |
| 1 | Protected against vertically falling water drops |
| 2 | Protected against vertically falling water drops when enclosure tilted up to 15° |
| 3 | Protected against spraying water |
| 4 | Protected against splashing water |
| 5 | Protected against water jets |
| 6 | Protected against powerful water jets |
| 7 | Protected against the effects of temporary immersion in water |
| 8 | Protected against the effects of continuous immersion in water |

# Toggle Switch Boots

HEXSEAL® and E-SEEL® toggle switch boots are molded from a high tear-strength silicone rubber bonded to a built-in mounting nut. Each encloses the base of the protruding switch bushing and forms a watertight and dust-tight seal against the front panel surface.

## SPECIFICATIONS

**Material**.....HEXSEALS: Silicone rubber conforms to A-A-59588, GR 50 (unless otherwise specified).
E-SEELS: Silicone rubber polymer type ASTM D 1418

**Mounting Nut**.....HEXSEALS: Brass, nickel-plated
E-SEELS: Brass, black-oxide

**Temperature Range**....HEXSEALS: -94°F to +400°F (-70°C to +204°C)
E-SEELS: -80°F to +400°F (-62°C to +204°C)

**Enclosure Protection**..NEMA/UL/ULC Types 1, 2, 3, 3S, 3R, 4, 4X, 6P, 12, 13; IEC IP66/IP68

**Pressure Range**.....Exceeds 15 psi internal and 1500 psi external (N5032B: 10 psi)

**Operational Life**.....50,000 actuations (minimum)

**Shelf Life**.....Excess of 25 years

**Resistant to**.....Salt spray, sunlight, ozone, weather, fungus, and most acids and lubricating oils

**Military Specs***.....Most HEXSEALS meet MIL-B-5423. (See listing on page 6)

**Agency Recognition**...UL & ULC Recognized to UL Std. 50

**Installation**.....Please see installation instructions on page 19

*APM's policy is to manufacture our HEXSEAL® sealing boots as defined by the requirements of MIL-Spec B-5423 which we regard as the standard for the switch, circuit breaker and potentiometer industry. These requirements were formulated based on our original patent.

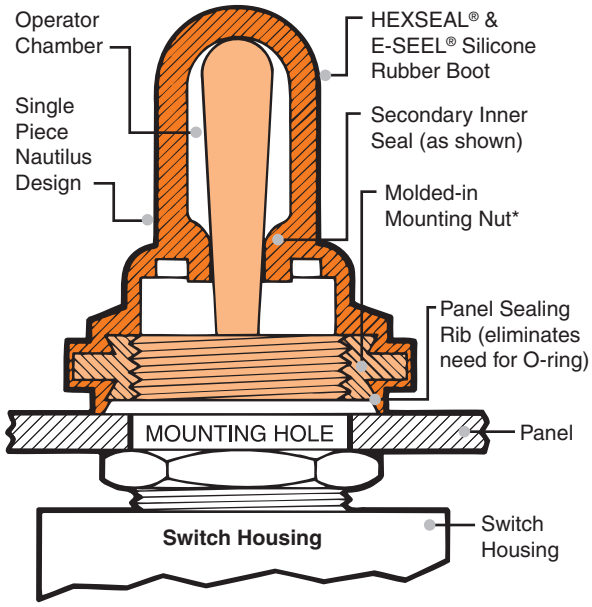


*For I.Q. Surround-Nut option, see next page.
Additional metric sizes available (consult factory)

## HOW TO ORDER

Specify APM boot part number and, if necessary, the appropriate bushing adaptor part number (please see page 19).

RoHS Compliant

FIGURE 1

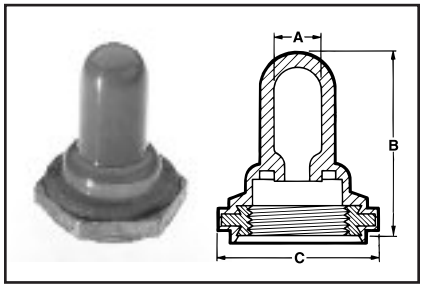


### Full-Toggle Boot with Integral Secondary Inner Seal – IP66/68 Rated — Figure 1

| Thread Size | Max. Toggle Height Above Bushing (in.) | A Throat or I.D. | | B Height | | C Flat | | Military Part Number | APM Boot Part Number | Color* | HEXSEAL | E-SEEL |
|---|---|---|---|---|---|---|---|---|---|---|---|---|
| | | in. | mm | in. | mm | in. | mm | | | | | |
| 1/4-40NS-2B | .31 | .104 | 2.64 | .422 | 10.72 | .375 | 9.58 | M5423/04-01 | N-5030 | Gray | • | |
| 1/4-40NS-2B | .37 | .062 | 1.53 | .500 | 12.70 | .375 | 9.52 | M5423/05-01 | N-5030L† | Gray | • | |
| 1/4-40NS-2B | .28 | .062 | 1.58 | .390 | 9.91 | .375 | 9.52 | M5423/05-02 | N-5030R | Gray | • | |
| 1/4-40NS-2B | .50 | .062 | 1.58 | .594 | 15.08 | .375 | 9.52 | — | N-5030S | Gray | • | |
| 15/32-32NS-2B | .66 | .219 | 5.55 | .844 | 21.44 | .625 | 15.88 | M5423/01-01 | N-1030 | Gray | • | |
| 1/2-32NS-2B | .66 | .219 | 5.55 | .844 | 21.44 | .625 | 15.88 | — | N-1030 1/2-32 | Gray | • | |
| 15/32-32NS-2B | .71 | .219 | 5.55 | .937 | 23.81 | .625 | 15.88 | — | C1131/27 | Black | | • |

*Other colors available. Please consult factory. †Material conforms to A-A-59588 Gr. 25

FIGURE 2

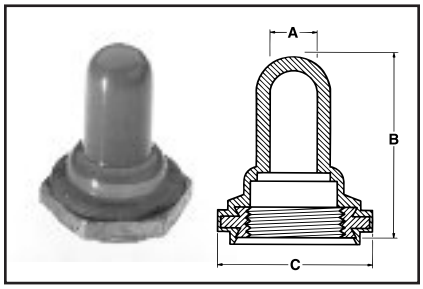


### Full-Toggle Boots (with constant I.D.) – IP66/68 Rated — Figure 2

| Thread Size | Max. Toggle Height Above Bushing (in.) | A Throat or I.D. | | B Height | | C Flat | | Military Part Number | APM Boot Part Number | Color* | HEXSEAL | E-SEEL |
|---|---|---|---|---|---|---|---|---|---|---|---|---|
| | | in. | mm | in. | mm | in. | mm | | | | | |
| M6 (metric) | .37 | .116 | 2.95 | .562 | 14.30 | .352 | 9.00 | — | 1131/25 | Black | • | |
| 15/32-32NS-2B | .437 | .210 | 5.35 | .625 | 15.88 | .625 | 15.88 | — | 1131/33 | Gray | • | |
| M12 (metric) | .812 | .234 | 5.95 | .859 | 21.83 | .625 | 15.88 | — | 1131/40 | Black | • | |
| 15/32-32NS-2B | .66 | .219 | 5.55 | .844 | 21.44 | .625 | 15.88 | — | IN-1030 | Gray | • | |
| 15/32-32NS-2B | .66 | .256 | 6.50 | .844 | 21.44 | .625 | 15.88 | — | 1131/31 | Gray | • | |
| 15/32-32NS-2B | .90 | .219 | 5.55 | 1.093 | 27.77 | .625 | 15.88 | — | 1131/26 | Gray | • | |
| 15/32-32NS-2B | 1.08 | .390 | 9.92 | 1.328 | 33.37 | .625 | 15.88 | — | N-1002 | Gray | • | |
| 15/32-32NS-2B | .925 | .300 | 7.62 | 1.110 | 28.19 | .625 | 15.88 | — | 50154 | Gray | • | |
| 1/2-32NS-2B | .66 | .219 | 5.55 | .844 | 21.44 | .625 | 15.88 | — | IN-1030 1/2-32 | Gray | • | |
| 1/2-32NS-2B | .66 | .256 | 6.50 | .844 | 21.44 | .625 | 15.88 | — | 1131/32 | Black | • | |
| 5/8-32UNS-2B | .78 | .187 | 4.76 | .844 | 21.44 | .750 | 19.05 | — | 1131/23 | Gray | • | |
| 15/32-32NS-2B | .71 | .219 | 5.55 | .937 | 23.80 | .625 | 15.88 | — | C1131/28 | Black | | • |

*Other colors available. Please consult factory. Mounting nut material: Aluminum

FIGURE 3

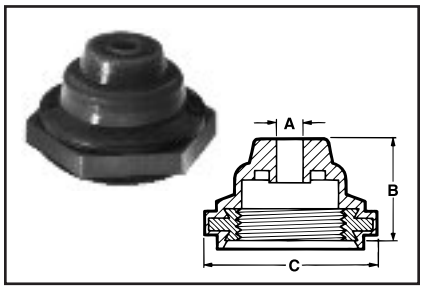


### Half-Toggle Boots (toggle actuator protrudes) – IP66/68 Rated — Figure 3

| Thread Size | Toggle Diameter Accom-modated (in.) | A Throat or I.D. | | B Height | | C Flat | | Military Part Number | APM Boot Part Number | Color* | HEXSEAL | E-SEEL |
|---|---|---|---|---|---|---|---|---|---|---|---|---|
| | | in. | mm | in. | mm | in. | mm | | | | | |
| 1/4-40NS-2B | .062-.188 | .047 | 1.19 | .250 | 6.35 | .375 | 9.53 | M5423/11-01 | N-5032B†† | Gray | • | |
| 15/32-32NS-2B | .155-.240 | .078 | 1.98 | .437 | 11.10 | .625 | 15.88 | M5423/02-01 | N-1030B | Gray | • | |
| 1/2-32NS-2B | .155-.240 | .078 | 1.98 | .437 | 11.10 | .625 | 15.88 | — | N-1030B1/2-32 | Gray | • | |
| 15/32-32NS-2B | .155-.240 | .078 | 1.98 | .437 | 11.10 | .625 | 15.88 | — | C1132/20 | Black | | • |

*Other colors available. Please consult factory.

DIMENSIONS FOR REFERENCE ONLY. Current dimensional drawings can be viewed on our website and CAD drawings can also be downloaded.

# TOGGLE SWITCH SEALING BOOTS WITH INTEGRAL IQ™ MOUNTING NUT*

## THE IQ CONCENTRO-NUT™ MOUNTS OVER THE SWITCH'S FRONT PANEL MOUNTING-NUT

- **Ideal protection against unforgiving environmental hazards — prolongs switch reliability**
- **Ideal for speedy retrofitting of booted and non-booted switches**
- **Ideal for easy original equipment assembling**
- **Ideal for meeting aesthetic requirements that call for smooth exterior surface around mounting nut**
- **Ideal color solutions for matching boot color to exact panel color, or for defining specific control function on request. Standard color choices are gray and black.**

**INSTALLS QUICKLY**

The APM HEXSEAL IQ Switch Sealing Boot is designed for applications where it is preferable to retain the original switch's front-panel mounting nut. This version is made possible by the incorporation of a newly designed bonded concentric mounting nut that features an internal cavity configuration allowing the integral CONCENTRO-NUT to sit on and wrap itself around the existing original switch front panel nut. This enables the two nuts to work in concert when tightened. The IQ Switch Sealing Boot mounting design permits an easy and speedy retrofit, or new OEM installation. The use of the IQ Sealing Boot prevents any switch disturbance; for example, the undesirable rotation of the switch body and possible stress on its connections.

No special tools or O-Rings, washers or adhesives are required. The IQ Switch Sealing Boot design also features a patented flange sealing-rib that fully contacts the front-panel surface, creating a vacuum-seal that protects the mounting hole from gas or liquid seepage contamination.
In addition to standard black or gray, any color can be specified to match any panel or to define a control function.

DFARS Compliant

RoHS Compliant

*Patent Pending  Made in USA

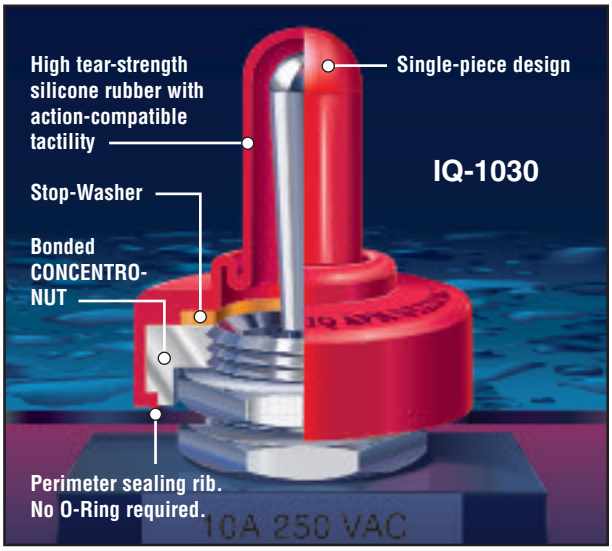


## SPECIFICATIONS

**Sheath Material:** Silicone rubber conforms to A-A-59588, Class 3B, Grade 60 (unless otherwise specified)
**Mounting Nut (CONCENTRO-NUT) Material:** Aluminum
**Stop Nut Material:** Brass
**Temperature Range:** -94°F to +400°F (-70°C to +204°C)
**Pressure Range:** Exceeds 15 psi internal and 1,500 psi external
**Operational Life:** 50,000 actuations (minimum)
**Shelf Life:** Excess of 25 years
**Enclosure Protection:** IEC 60529 IP 66/68 Rating
**Resistant To:** Salt spray, sunlight, ozone, weather, ice, sand, dirt, fungus, most acids, solvents and lubricating oils
**Military Specs:** Meets MIL-B-5423
**Agency Recognition:** UL Qualification pending
**Installation:** Mounts over existing toggle switch actuator. Tighten approximately three turns.

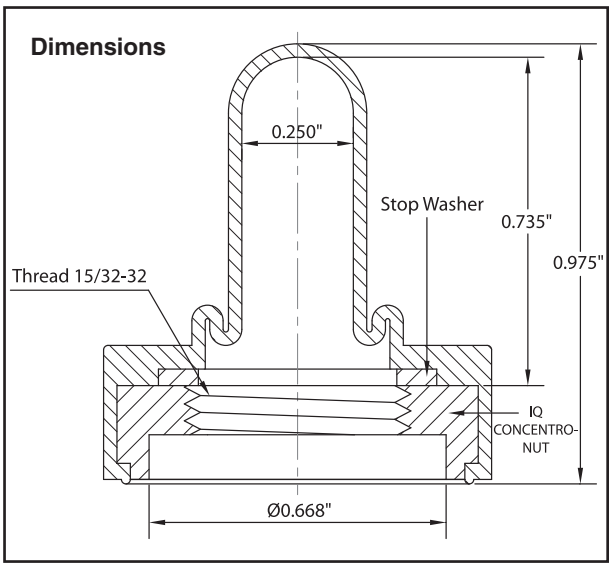


## HOW TO ORDER

Specify APM Boot part number. Example: IQ-1030-(add color code letter here) G=Gray, B=Black
Note: For special colors add PMS or other color specification. Consult factory.

FIGURE 4

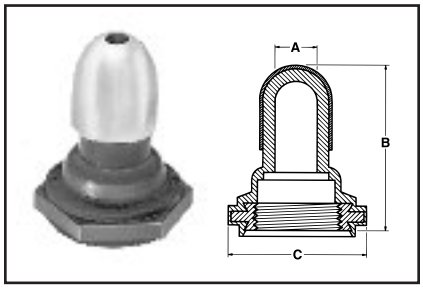


## Armored Full Toggle Boots – IP66/68 Rated

Figure 4

| Thread Size | Max. Toggle Height Above Bushing (in.) | A Throat or I.D. | | B Height | | C Flat | | Military Part Number | APM Boot Part Number | Color | HEXSEAL | E-SEEL |
|---|---|---|---|---|---|---|---|---|---|---|---|---|
| | | in. | mm | in. | mm | in. | mm | | | | | |
| 15/32-32NS-2B | .66 | .219 | 5.55 | .875 | 21.44 | .625 | 15.88 | — | N-1030A | Gray | • | |

Nickel plated brass cap bonded to boot.

FIGURE 5

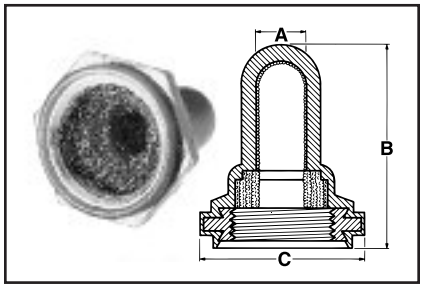


## EMI/RFI Shielded Full Toggle Boots – IP66/68 Rated

Figure 5

| Thread Size | Max. Toggle Height Above Bushing (in.) | A Throat or I.D. | | B Height | | C Flat | | Military Part Number | APM Boot Part Number | Color* | HEXSEAL | E-SEEL |
|---|---|---|---|---|---|---|---|---|---|---|---|---|
| | | in. | mm | in. | mm | in. | mm | | | | | |
| 1/4-40NS-2B | .36 | .062 | 1.58 | .500 | 12.70 | .375 | 9.52 | — | N-5030L RFI | Gray | • | |
| 15/32-32NS-2B | .66 | .219 | 5.55 | .844 | 21.44 | .625 | 15.88 | M5423/01-02 | IN-1030 RFI | Gray | • | |
| 1/2-32NS-2B | .66 | .219 | 5.55 | .844 | 21.44 | .625 | 15.88 | — | IN-1030 RFI 1/2-32 | Gray | • | |
| 1/4-40NS-2B | .28 | .062 | 1.58 | .390 | 9.90 | .375 | 9.52 | — | N-5030R RFI | Gray | • | |
| 1/4-40NS-2B | .50 | .062 | 1.58 | .594 | 15.08 | .375 | 9.52 | — | N-5030S RFI | Gray | • | |

*Other colors available. Please consult factory.
All standard EMI/RFI boots feature a knitted Monel shield. RFI/EMI shielded boots have an operational life of 15,000 actuations (minimum)

FIGURE 5a

## Sealed Switch Panel Cut-Out Sealing Bushing – IP66/68 Rated

Figure 5a

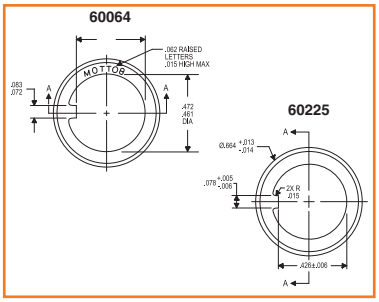


| APM Part Number | Compatible Switch Bushing | Washer Diameter | Washer Thickness | Color | Conforms to* |
|---|---|---|---|---|---|
| 60064<br>60225 | 15/32-32 | 0.677"<br>0.660" | 0.120"<br>0.105" | Gray | Meets MIL-B-5423/16-01, MS25196, UL & ULC Recognized |

*APM's policy is to manufacture our HEXSEAL® sealing boots as defined by the requirements of MIL-Spec B-5423 which we regard as the standard for the switch, circuit breaker and potentiometer industry. These requirements were formulated based on our original patent.

**SEE PAGE 16 FOR FULL DETAILS**

# Back-of-Panel Mounted Toggle Switch Boots

FIGURE 6

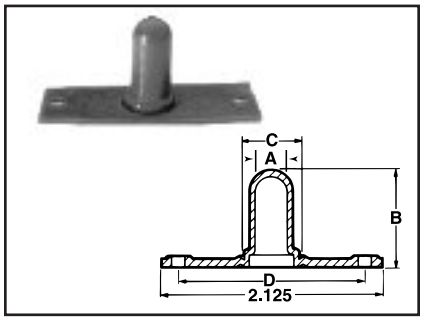


## Full Toggle Boot

Figure 6

| A Throat or I.D. | | B Height | | D Distance Between Mtg. Holes | | Width | | C Clearance Boot Hole Diameter | | Military Part Number | APM Boot Part Number | Color* | HEXSEAL | E-SEEL |
|---|---|---|---|---|---|---|---|---|---|---|---|---|---|---|
| inch | mm | inch | mm | inch | mm | inch | mm | inch | mm | | | | | |
| .315 | 7.91 | .938 | 23.82 | 1.813 | 46.04 | .750 | 19.05 | .510 | 12.95 | — | 2030 | Gray | • | |

*Other colors available. Please consult factory.

FIGURE 7

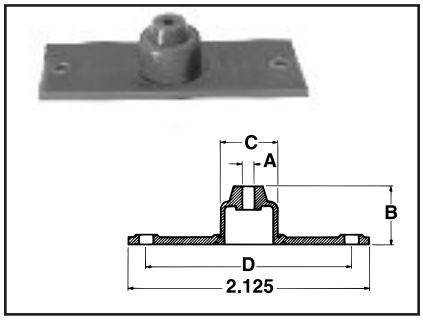


## Half Toggle Boot (Toggle Actuator Protrudes)

Figure 7

| A Throat or I.D. | | B Height | | D Distance Between Mtg. Holes | | Width | | C Clearance Boot Hole Diameter | | Military Part Number | APM Boot Part Number | Color* | HEXSEAL | E-SEEL |
|---|---|---|---|---|---|---|---|---|---|---|---|---|---|---|
| inch | mm | inch | mm | inch | mm | inch | mm | inch | mm | | | | | |
| .093 | 2.38 | .500 | 12.70 | 1.813 | 46.04 | .750 | 19.05 | .510 | 12.95 | M5423/03-01 | 2030B | Gray | • | |

*Other colors available. Please consult factory.

DIMENSIONS FOR REFERENCE ONLY.

Current dimensional drawings can be viewed on our website and CAD drawings can also be downloaded.

RoHS Compliant

# Sealing Boots for Pushbutton-Actuated Switches

HEXSEAL® and E-SEEL® pushbutton boots are molded from a high tear-strength silicone rubber bonded to a built-in mounting nut. Each encloses the base of the protruding switch bushing and forms a watertight and dust-tight seal against the front panel surface.

## SPECIFICATIONS

**Material**.....HEXSEALS: Silicone rubber conforms to A-A-59588, Gr. 60 unless otherwise specified.
E-SEELS: Silicone rubber polymer type ASTM D1418

**Mounting Nut**.....HEXSEALS: Brass, nickel-plated
E-SEELS: Brass, black-oxide

**Temperature Range**....HEXSEALS: -94°F to +400°F (-70°C to +204°C)
E-SEELS: -80°F to +400°F (-62°C to +204°C)

**Enclosure Protection**..NEMA/UL/ULC Types 1, 2, 3, 3S, 3R, 4, 4X, 6P, 12, 13; IEC IP66/IP68

**Pressure Range**.....Exceeds 15 psi internal and 1500 psi external

**Operational Life**.....50,000 actuations (minimum)

**Shelf Life**.....Excess of 25 years

**Resistant to**.....Salt spray, sunlight, ozone, weather, fungus, and most acids and lubricating oils

**Military Specs***.....Most HEXSEALS meet MIL-B-5423. (See listing on page 6)

**Agency Recognition**...UL & ULC Recognized to UL Std. 50

**Installation**.....Please see installation instructions on page 19

*APM's policy is to manufacture our HEXSEAL® sealing boots as defined by the requirements of MIL-Spec B-5423 which we regard as the standard for the switch, circuit breaker and potentiometer industry. These requirements were formulated based on our original patent.

## HOW TO ORDER

Specify APM boot part number and, if necessary, the appropriate bushing adaptor part number (please see page 19).

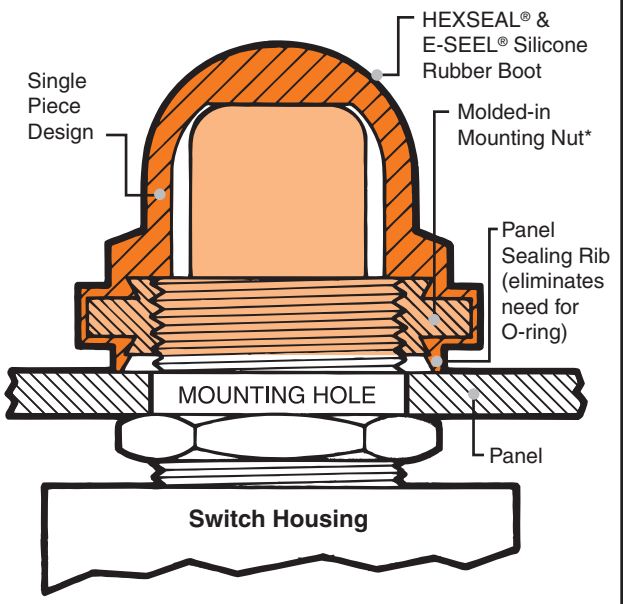


*For I.Q. Surround-Nut option, consult factory.
Metric sizes available (consult factory)

FIGURE 8

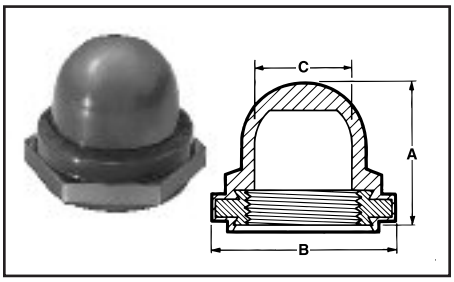


FIGURE 9

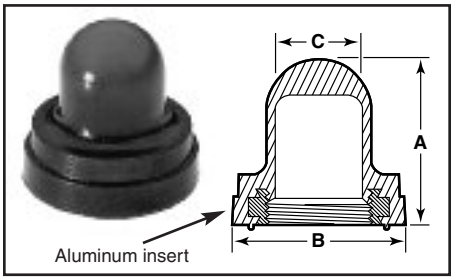


FIGURE 10

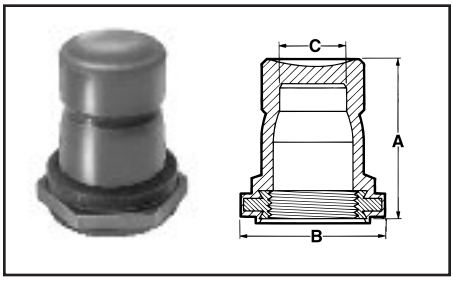


## Full Pushbutton Boots – IP66/68 Rated

Figure 8

| Thread Size | Max. Plunger Height | | A | | B Flat | | C I.D. | | Military Part Number | APM Boot Part Number | Color* | HEXSEAL | E-SEEL |
|---|---|---|---|---|---|---|---|---|---|---|---|---|---|
| | inch | mm | inch | mm | inch | mm | inch | mm | | | | | |
| 8-40 NS-2B | .118 | 3.00 | .226 | 5.70 | .250 | 6.35 | .125 | 3.18 | — | 1231/17 | Gray | • | |
| 8-40 NS-2B | .188 | 4.76 | .297 | 7.54 | .250 | 6.35 | .120 | 3.18 | SCL6303A-03 | N5045 | Gray | • | |
| 1/4-32NS-2B | .203 | 5.16 | .313 | 7.94 | .375 | 9.53 | .188 | 4.76 | M5423/10-01 | N5040G | Gray | • | |
| 1/4-32NS-2B | .453 | 11.51 | .531 | 13.49 | .375 | 9.53 | .125 | 3.18 | — | 1231/32 | Gray | • | |
| 1/4-40NS-2B | .141 | 3.57 | .313 | 7.94 | .375 | 9.53 | .188 | 4.76 | M5423/10-03 | N5040 | Gray | • | |
| 1/4-40NS-2B | .203 | 5.16 | .313 | 7.94 | .375 | 9.53 | .188 | 4.76 | M5423/10-02 | N5040R | Gray | • | |
| 1/4-40NS-2B | .344 | 11.51 | .531 | 13.49 | .375 | 9.53 | .125 | 3.18 | — | 1231/31 | Gray | • | |
| 5/16-32UNEF-2B | .212 | 5.41 | .359 | 9.13 | .437 | 11.11 | .156 | 3.97 | — | 1231/27 | Gray | • | |
| 3/8-27NS-2B | .545 | 13.80 | .653 | 16.60 | .500 | 12.70 | .300 | 7.60 | — | 1231/8 | Gray | • | |
| 3/8-32NEF-2B | .545 | 13.80 | .653 | 16.60 | .500 | 12.70 | .300 | 7.60 | — | 1231/35 | Clear | • | |
| 7/16-28UNEF-2B | .438 | 11.11 | .719 | 18.26 | .625 | 15.88 | .422 | 10.72 | — | NC3030 7/16-28 | Clear | • | |
| 7/16-32UN-2B | .438 | 11.11 | .719 | 18.26 | .625 | 15.88 | .422 | 10.72 | — | NC3030 7/16-32 | Gray | • | |
| 15/32-32NS-2B | .281 | 7.14 | .547 | 13.89 | .625 | 15.88 | .422 | 10.72 | M5423/07-01 | N3030 | Gray | • | |
| 15/32-32NS-2B | .281 | 7.14 | .547 | 13.89 | .625 | 15.88 | .422 | 10.72 | M5423/07-11 | N3030-2513 | Clear | • | |
| 15/32-32NS-2B | .438 | 11.11 | .719 | 18.26 | .625 | 15.88 | .422 | 10.72 | M5423/07-02 | NC3030 | Gray | • | |
| 15/32-32NS-2B | .438 | 11.11 | .719 | 18.26 | .625 | 15.88 | .422 | 10.72 | M5423/07-12 | NC3030-2513 | Clear | • | |
| 1/2-32NS-2B | .281 | 7.14 | .547 | 13.89 | .625 | 15.88 | .422 | 10.72 | M5423/07-03 | NH3030 | Gray | • | |
| 1/2-32NS-2B | .188 | 4.76 | .547 | 13.89 | .625 | 15.88 | .422 | 10.72 | M5423/07-05 | NH3030S | Gray | • | |
| 1/2-32NS-2B | .469 | 11.91 | .734 | 18.65 | .625 | 15.88 | .422 | 10.72 | — | NC3030H | Gray | • | |
| 5/8-24NEF-2B | .281 | 7.14 | .609 | 15.48 | .750 | 19.05 | .515 | 13.10 | M5423/07-04 | N3040 | Gray | • | |
| 15/32-32NS-2B | .281 | 7.14 | .547 | 13.89 | .625 | 15.88 | .422 | 10.72 | — | C1231/41 | Black | | • |
| 15/32-32NS-2B | .438 | 11.11 | .719 | 18.26 | .625 | 15.88 | .422 | 10.72 | — | C1231/42 | Black | | • |

IP66/68 Rated Figure 9

| Thread Size | Max. Plunger Height | | A | | B O.D. | | C I.D. | | Military Part Number | APM Boot Part Number | Color* | HEXSEAL | E-SEEL |
|---|---|---|---|---|---|---|---|---|---|---|---|---|---|
| | inch | mm | inch | mm | inch | mm | inch | mm | | | | | |
| 3/8-27NS-2B | .330 | 8.38 | .609 | 15.48 | .641 | 16.27 | .320 | 8.11 | — | 1221/12 | Gray | • | |
| 15/32-32NS-2B | .400 | 10.14 | .719 | 18.26 | .766 | 19.45 | .375 | 9.53 | — | 1221/15 | Gray | • | |
| 3/8-24NF-2B | .330 | 8.38 | .609 | 15.48 | .641 | 16.27 | .320 | 8.11 | — | C1221/22 | Clear | | • |
| 3/8-27NS-2B | .330 | 8.38 | .609 | 15.48 | .641 | 16.27 | .320 | 8.11 | — | C1221/21 | Black | | • |
| 3/8-27NS-2B | .330 | 8.38 | .609 | 15.48 | .641 | 16.27 | .320 | 8.11 | — | C1221/21 4 | Clear | | • |
| 3/8-32NEF-2B | .330 | 8.38 | .609 | 15.48 | .641 | 16.27 | .320 | 8.11 | — | C1221/23 | Clear | | • |

Mounting nut material: Aluminum

IP66/68 Rated Figure 10

| Thread Size | Max. Plunger Height | | A | | B Flat | | C I.D. | | Military Part Number | APM Boot Part Number | Color* | HEXSEAL | E-SEEL |
|---|---|---|---|---|---|---|---|---|---|---|---|---|---|
| | inch | mm | inch | mm | inch | mm | inch | mm | | | | | |
| 7/16-28UNEF-2B | .313 | 7.94 | .797 | 20.24 | .625 | 15.88 | .344 | 8.73 | — | NC3030FL 7/16-28 | Gray | • | |
| 7/16-32UN-2B | .313 | 7.94 | .797 | 20.24 | .625 | 15.88 | .344 | 8.73 | — | NC3030FL 7/16-32 | Gray | • | |
| 15/32-32NS-2B | .313 | 7.94 | .797 | 20.24 | .625 | 15.88 | .344 | 8.73 | — | NC3030FL | Gray | • | |

*Other colors available. Please consult factory.

DIMENSIONS FOR REFERENCE ONLY. Current dimensional drawings can be viewed on our website and CAD drawings can also be downloaded.

RoHS Compliant

FIGURE 11

## Panel-Mounted Full Pushbutton Boots – IP66/68 Rated

Figure 11

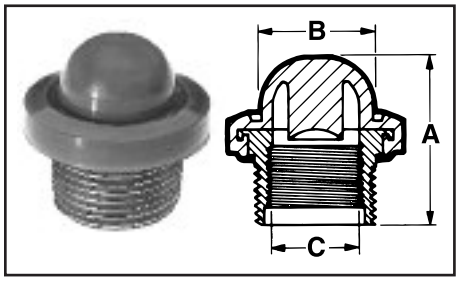


| Outside Thread | Plunger-Bushing Height | | A | | B O.D. | | C Inside Thread | Military Part Number | APM Boot Part Number | Color* | HEXSEAL | E-SEEL |
|---|---|---|---|---|---|---|---|---|---|---|---|---|
| | inch | mm | inch | mm | inch | mm | | | | | | |
| 5/8-27NS-2A | .438 | 11.11 | .906 | 23.03 | .875 | 22.23 | 1/2-32NS-2B | M5423/06-01† | 3070 | Gray | • | |
| 5/8-24NEF-2A | .438 | 11.11 | .906 | 23.02 | .875 | 22.23 | 1/2-32NS-2B | M5423/06-03 | 3073 | Gray | • | |
| 5/8-27NS-2A | .688 | 17.46 | .906 | 23.02 | .875 | 22.23 | 1/2-32NS-2B | M5423/06-02† | 3075 | Gray | • | |
| 5/8-24NEF-2A | .688 | 17.46 | .906 | 23.02 | .875 | 22.23 | 1/2-32NS-2B | M5423/06-04 | 3077 | Gray | • | |

*Other colors available. Please consult factory. †Inactive for new designs.
Material conforms to ZZ-R-765 Class III, Gr. 50.

FIGURE 12

## Half-Pushbutton Boots (Pushbutton Actuator Protrudes) – IP66/68 Rated

Figure 12

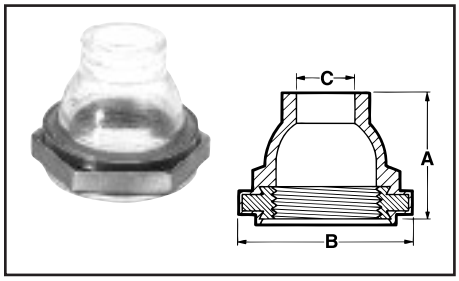


| Thread Size | A Height | | B Flat | | C Throat | | Military Part Number | APM Boot Part Number | Color* | HEXSEAL | E-SEEL |
|---|---|---|---|---|---|---|---|---|---|---|---|
| | inch | mm | inch | mm | inch | mm | | | | | |
| 7/16-28NS-2B | .547 | 13.89 | .625 | 15.88 | .250 | 6.35 | — | N3030B 7/16-28 | Clear | • | |
| 7/16-32UN-2B | .547 | 13.89 | .625 | 15.88 | .250 | 6.35 | — | N3030B 7/16-32 | Clear | • | |
| 15/32-32NS-2B | .547 | 13.89 | .625 | 15.88 | .250 | 6.35 | — | N3030B | Clear | • | |
| 1/2-32NS-2B | .547 | 13.89 | .625 | 15.88 | .250 | 6.35 | — | NH3030B | Clear | • | |

*Other colors available. Please consult factory

FIGURE 13

## Armored Pushbutton Boots – IP66/68 Rated

Figure 13

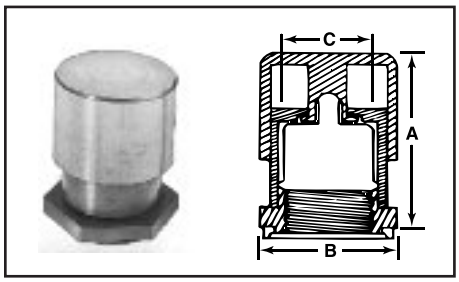


| Thread Size | Plunger Height | | A | | B Flat | | C I.D. | | Military Part Number | APM Boot Part Number | Color | HEXSEAL | E-SEEL |
|---|---|---|---|---|---|---|---|---|---|---|---|---|---|
| | inch | mm | inch | mm | inch | mm | inch | mm | | | | | |
| 15/32-32NS-2B | .438 | 11.11 | .984 | 25.00 | .750 | 19.05 | .422 | 10.72 | — | 1238/1 SS | †† | • | |
| 15/32-32NS-2B | .438 | 11.11 | .984 | 25.00 | .750 | 19.05 | .422 | 10.72 | — | 1238/5* SS | †† | • | |

*P/N 1238/5 features a 1 1/4" diameter actuator button.
††Stainless steel housing with silicone boot.

FIGURE 14

## EMI/RFI Shielded Full Pushbutton Boots – IP66/68 Rated

Figure 14

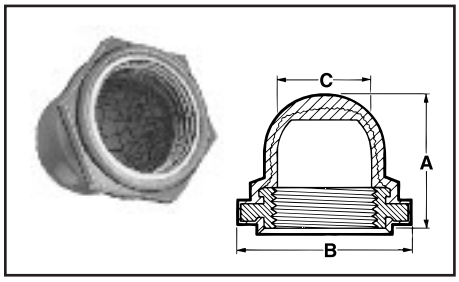


| Thread Size | Plunger Height | | A | | B Flat | | C I.D. | | Military Part Number | APM Boot Part Number | Color* | HEXSEAL | E-SEEL |
|---|---|---|---|---|---|---|---|---|---|---|---|---|---|
| | inch | mm | inch | mm | inch | mm | inch | mm | | | | | |
| 15/32-32NS-2B | .281 | 7.14 | .547 | 13.89 | .625 | 15.88 | .422 | 10.72 | M5423/07-06 | N3030RFI | Gray | • | |
| 15/32-32NS-2B | .438 | 11.11 | .719 | 18.26 | .625 | 15.88 | .422 | 10.72 | M5423/07-07 | NC3030RFI | Gray | • | |
| 1/2-32NS-2B | .281 | 7.14 | .547 | 13.89 | .625 | 15.88 | .422 | 10.72 | M5423/07-08 | NH3030RFI | Gray | • | |
| 1/2-32NS-2B | .188 | 4.76 | .547 | 13.89 | .625 | 15.88 | .422 | 10.72 | M5423/07-10 | NH3030SRFI | Gray | • | |
| 5/8-24NEF-2B | .281 | 7.14 | .609 | 15.48 | .750 | 19.05 | .516 | 13.10 | M5423/07-09 | N3040RFI | Gray | • | |
| 1/2-32NS-2B | .469 | 11.91 | .734 | 18.65 | .625 | 15.88 | .422 | 10.72 | — | NC3030HRFI | Gray | • | |

*Other colors available. Please consult factory.
All standard EMI/RFI boots feature a molded knitted Monel shield. EMI/RFI shielded pushbutton boots have an operational life of 15,000 actuations (minimum)

# Back-of-Panel Mounted Pushbutton Boots

FIGURE 15

## Full Pushbutton Boots

Figure 15

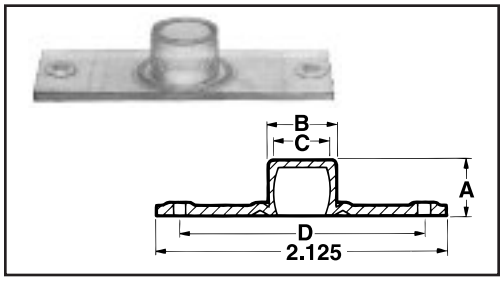


| A Height | | B O.D. | | C | | D Hole Locations | | Width | | Military Part Number | APM Boot Part Number | Color | HEXSEAL | E-SEEL |
|---|---|---|---|---|---|---|---|---|---|---|---|---|---|---|
| inch | mm | inch | mm | inch | mm | inch | mm | inch | mm | | | | | |
| .906 | 23.02 | .531 | 13.49 | .453 | 11.51 | 1.813 | 46.04 | .750 | 19.05 | — | 3050 | Clear | • | |
| .399 | 10.13 | .438 | 11.11 | .359 | 9.13 | 1.813 | 46.04 | .750 | 19.05 | — | 3051 | Clear | • | |

Part numbers in this group conform to A-A-59588 Gr. 50.

FIGURE 16

## Half Pushbutton Boots (Pushbutton Actuator Protrudes)

Figure 16

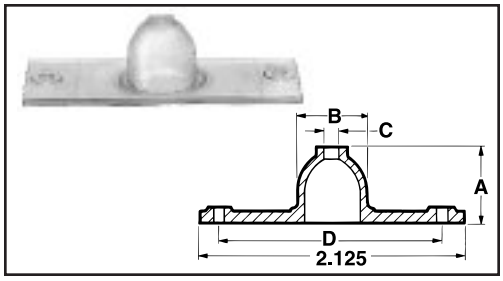


| A Height | | B O.D. | | C Throat | | D Hole Locations | | Width | | Military Part Number | APM Boot Part Number | Color | HEXSEAL | E-SEEL |
|---|---|---|---|---|---|---|---|---|---|---|---|---|---|---|
| inch | mm | inch | mm | inch | mm | inch | mm | inch | mm | | | | | |
| .578 | 14.68 | .531 | 13.49 | .156 | 3.97 | 1.813 | 46.04 | .750 | 19.05 | — | 3050B | Clear | • | |

Part numbers in this group conform to A-A-59588 Gr. 50.

DIMENSIONS FOR REFERENCE ONLY.

Current dimensional drawings can be viewed on our website and CAD drawings can also be downloaded.

RoHS Compliant

# Indicator & Illuminated Pushbutton Switch Seals

HEXSEAL® indicator and lighted pushbutton switch boots are molded from RUBRGLAS™, APM's proprietary transparent silicone rubber formulation, bonded to a threaded metal insert. Each encloses the base of the protruding indicator or lighted pushbutton switch bushing and forms a watertight and dust-tight seal against the front panel surface.

FIGURE 17

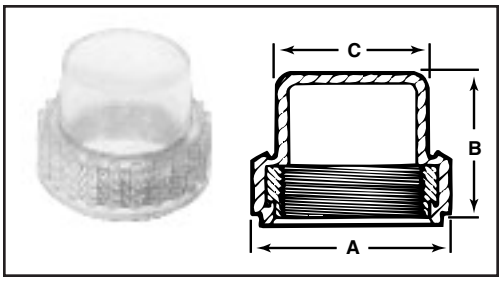


**RUBRGLAS® Seals – IP66/68 Rated** — Figure 17

| Thread Size | A Width | | B Height | | C Boot O.D. | | Fits Indicator Light # | Military Part Number | APM Boot Part Number | Color | HEXSEAL |
|---|---|---|---|---|---|---|---|---|---|---|---|
| | inch | mm | inch | mm | inch | mm | | | | | |
| 11/16-32NS-2B | 1.000 | 25.40 | .750 | 19.04 | .712 | 18.08 | MS-25041 | — | 4082 | Clear | • |
| 11/16-32NS-2B | 1.000 | 25.40 | 1.000 | 25.40 | .712 | 18.08 | — | — | 4086 | Clear | • |
| 13/16-32NS-2B | 1.125 | 28.58 | .812 | 20.64 | .843 | 21.43 | — | — | 4080 | Clear | • |
| 7/8-32NS-2B | 1.125 | 28.58 | .812 | 20.64 | .858 | 21.79 | — | — | 4085 | Clear | • |
| .850-24NS-2B | 1.125 | 28.58 | .812 | 20.64 | .838 | 21.28 | — | — | 4088 | Clear | • |

RUBRGLAS™ seals have an operational life of 30,000 actuations (minimum), and a pressure rating of 15 psi internal/external.

Note: See page 20 for example of custom designed seals for lighted pushbutton switches.

DIMENSIONS FOR REFERENCE ONLY.

RoHS Compliant

# Colorizing Incandescent Lamp Filters Available

APM HEXSEAL also offers a broad range of silicone colorizing filters for miniature incandescent lamps. These easy-to-install filters turn a white/clear lamp into a colored indicator. Ask for SiliKrome® catalog SK100.

# Handset Switch Boots

Ideal for wireless communications applications, HEXSEAL® handset switch boots are engineered to rugged specifications, withstanding a minimum of half a million actuations.

RoHS Compliant

## SPECIFICATIONS

**Material:** Boot: Silicone rubber. Conforms to A-A-59588 Gr. 50
**Temperature Range:** -94°F to +400°F (-70°C to +204°C)
**Shelf Life:** Excess of 25 years.
**Operational Life:** 500,000 actuations, minimum.
**Resistant to:** Salt spray, weather, sunlight, ozone and most acids
**Military Specifications*:** Most Hexseal products meet Mil-B-5423.
For listing, see page 6.

*APM's policy is to manufacture our HEXSEAL® sealing boots as defined by the requirements of MIL-Spec B-5423 which we regard as the standard for the switch, circuit breaker and potentiometer industry. These requirements were formulated based on our original patent.

| FIGURES 18, 19 & 20 DESCRIPTION | A | | B | | C | | D Hole Locations | | Width | | Military Part Number | APM Part Number | Color* | HEXSEAL |
|---|---|---|---|---|---|---|---|---|---|---|---|---|---|---|
| | inch | mm | inch | mm | inch | mm | inch | mm | inch | mm | | | | |
| **Microphone M52, Handset H33/PT** | .652 | 16.5 | 2.248 | 57.1 | 2.148 | 54.5 | 2.594 | 66.0 | .612 | 15.5 | M5423/15-01 | 1211/13 | Gray | • |
| **Handset H189** | .406 | 10.4 | 1.300 | 33.0 | 1.250 | 31.7 | 3.380 | 85.9 | .700 | 11.3 | M5423/15-02 | 1211/14 | Black | • |
| **Handset H250** | .576 | 14.6 | .808 | 20.5 | .718 | 18.2 | 1.500 | 38.0 | .687 | 17.5 | M5423/15-03 | 1211/31 | Black | • |

*Other colors available. Please consult factory.

FIGURE 18

**Microphone M52, Handset H33/PT**
**Part No. 1211/13**

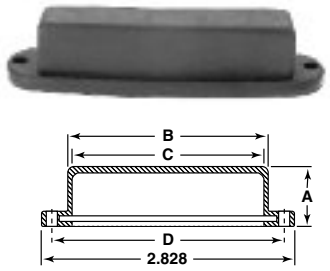


FIGURE 19

**Handset H189**
**Part No. 1211/14**

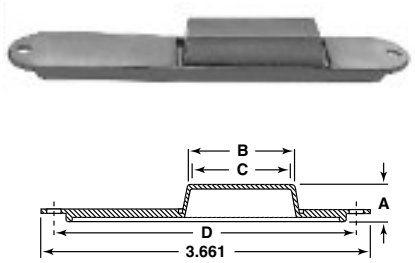


FIGURE 20

**Handset H250**
**Part No. 1211/31**

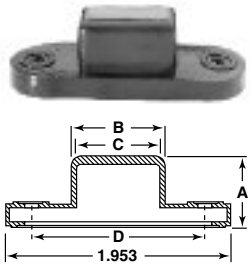


DIMENSIONS FOR REFERENCE ONLY.

# Rotary Shaft Seals for Switches & Potentiometers

HEXSEAL® and E-SEEL® rotary shaft seals are molded from a high tear-strength silicone rubber bonded to a built-in mounting nut. Each seal surrounds the rotary shaft and forms a watertight and dust-tight seal against the shaft and front panel surface.

## SPECIFICATIONS

**Material**.....HEXSEALS: Silicone rubber conforms to A-A-59588, Gr. 60 unless otherwise specified.
E-SEELS: Silicone rubber polymer type ASTM D1418

**Mounting Nut**.....HEXSEALS: Brass, nickel-plated
E-SEELS: Brass, black-oxide

**Temperature Range**....HEXSEALS: -94°F to +400°F (-70°C to +204°C)
E-SEELS: -80°F to +400°F (-62°C to +204°C)

**Enclosure Protection**..NEMA/UL/ULC Types 1, 2, 3, 3S, 3R, 4, 4X, 6P, 12, 13; IEC IP66/IP68

**Pressure Range**.....Exceeds 15 psi internal and 1500 psi external

**Operational Life**.....50,000 actuations (minimum)

**Shelf Life**.....Excess of 25 years

**Resistant to**.....Salt spray, sunlight, ozone, weather, fungus, and most acids and lubricating oils

**Military Specs***.....Most HEXSEALS meet MIL-B-5423. (See listing on page 6)

**Agency Recognition**...UL & ULC Recognized to UL Std. 50

**Installation**.....Please see installation instructions on page 19

*APM's policy is to manufacture our HEXSEAL® sealing boots as defined by the requirements of MIL-Spec B-5423 which we regard as the standard for the switch, circuit breaker and potentiometer industry. These requirements were formulated based on our original patent.

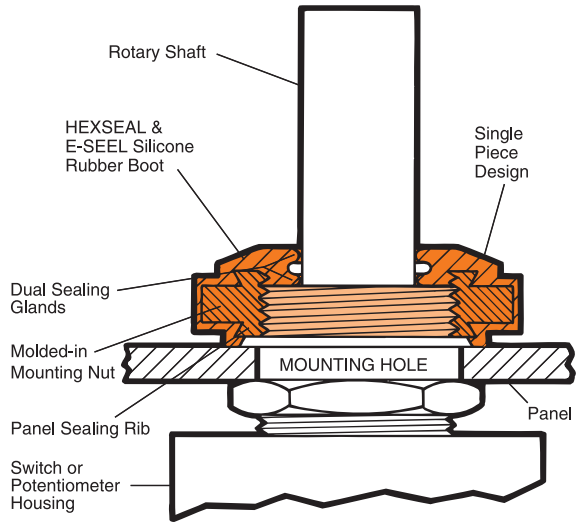


Metric sizes available (consult factory)

## HOW TO ORDER

Specify APM boot part number and, if necessary, the appropriate bushing adaptor part number (please see page 19).

FIGURE 21

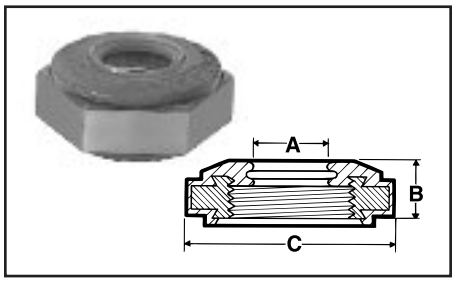


### Rotary Shaft Seals – IP66/68 Rated

Figure 21

| Thread Size | A Shaft Size | | B Height | | C Flat | | Military Part Number | APM Boot Part Number | Color* | HEXSEAL | E-SEEL |
|---|---|---|---|---|---|---|---|---|---|---|---|
| | inch | mm | inch | mm | inch | mm | | | | | |
| 1/4-28NF2B | .125 | 3.18 | .219 | 5.56 | .375 | 9.53 | — | N9042 x 1/8 | Gray | • | |
| 1/4-32NEF-2B | .125 | 3.18 | .219 | 5.56 | .375 | 9.53 | M5423/09-03 | N9040 x 1/8 | Gray | • | |
| 3/8-32NEF-2B | .125 | 3.18 | .219 | 5.56 | .500 | 12.70 | M5423/09-01 | N9030 x 1/8 | Gray | • | |
| 3/8-32NEF-2B | .188 | 4.78 | .219 | 5.56 | .500 | 12.70 | — | N9030 x 3/16 | Gray | • | |
| 3/8-32NEF-2B | .250 | 6.35 | .219 | 5.56 | .500 | 12.70 | M5423/09-02 | N9030 x 1/4 | Gray | • | |
| 3/8-32NEF-2B | .250 | 6.35 | .359 | 9.12 | .500 | 12.70 | — | N9033 x 1/4 | Gray | • | |
| 15/32-32NS-2B | .250 | 6.35 | .219 | 5.56 | .625 | 15.88 | M5423/09-04 | N9060 x 1/4 | Gray | • | |
| 1/2-32NS-2B | .250 | 6.35 | .219 | 5.56 | .625 | 15.88 | M5423/09-06 | N9063 x 1/4 | Gray | • | |
| 5/8-24NEF-2B | .375 | 9.53 | .219 | 5.56 | .750 | 19.05 | M5423/09-05 | N9065 x 3/8 | Gray | • | |
| 5/8-24NEF-2B | .500 | 12.70 | .219 | 5.56 | .750 | 19.05 | — | N9065 x 1/2 | Gray | • | |
| 3/8-32NEF-2B | .250 | 6.35 | .219 | 5.56 | .500 | 12.70 | — | C1332/40 | Black | | • |

*Other colors available. Please consult factory.

FIGURE 22

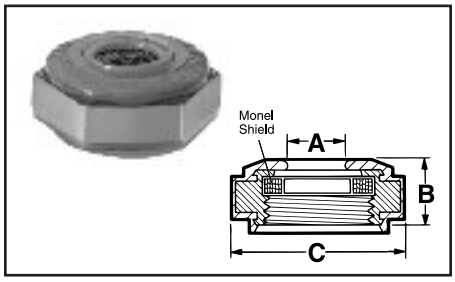


### RFI/EMI Shielded Rotary Shaft Seals – IP66/68 Rated

Figure 22

| Thread Size | A Shaft Size | | B Height | | C Flat | | Military Part Number | APM Boot Part Number | Color* | HEXSEAL | E-SEEL |
|---|---|---|---|---|---|---|---|---|---|---|---|
| | inch | mm | inch | mm | inch | mm | | | | | |
| 1/4-32NF2B | .125 | 3.18 | .219 | 5.56 | .375 | 9.53 | M5423/09-09 | N9040 x 1/8 RFI | Gray | • | |
| 3/8-32NEF-2B | .125 | 3.18 | .219 | 5.56 | .500 | 12.70 | M5423/09-07 | N9030 x 1/8 RFI | Gray | • | |
| 3/8-32NEF-2B | .250 | 6.35 | .219 | 5.56 | .500 | 12.70 | M5423/09-08 | N9030 x 1/4 RFI | Gray | • | |
| 3/8-32NEF-2B | .250 | 6.35 | .359 | 9.12 | .500 | 12.70 | M5423/09-14 | N9033 x 1/4 RFI | Gray | • | |
| 15/32-32NS-2B | .250 | 6.35 | .219 | 5.56 | .625 | 15.88 | M5423/09-10 | N9060 x 1/4 RFI | Gray | • | |
| 5/8-24NEF-2B | .375 | 9.53 | .219 | 5.56 | .750 | 19.05 | M5423/09-11† | N9065 x 3/8 RFI | Gray | • | |
| 1/2-32NS-2B | .250 | 6.35 | .219 | 5.56 | .625 | 15.88 | M5423/09-12 | N9063 x 1/4 RFI | Gray | • | |
| 1/4-28NF-2B | .125 | 3.18 | .219 | 5.56 | .375 | 9.53 | — | N9042 x 1/8 RFI | Gray | • | |
| 3/8-32NEF-2B | .125 | 3.18 | .531 | 13.49 | .625 | 15.88 | — | NLK9030 x 1/8 RFI | Gray | • | |
| 3/8-32NEF-2B | .250 | 6.35 | .531 | 13.49 | .625 | 15.88 | — | NLK9030 x 1/4 RFI | Gray | • | |

*Other colors available. Please consult factory. †Inactive for new designs.
All Standard RFI/EMI boots feature knitted Monel wire shields.

FIGURE 23

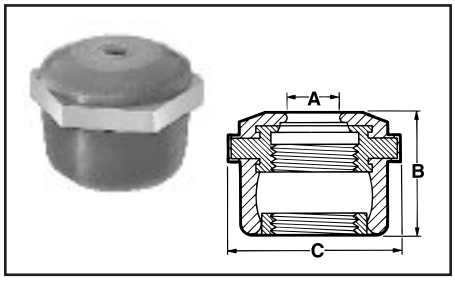


### Locking Rotary Shaft Seals – IP66/68 Rated

Figure 23

| Thread Size | A Shaft Size | | B Height | | C Flat | | Lock Nut O.D. | | Military Part Number | APM Boot Part Number | Color* | HEXSEAL | E-SEEL |
|---|---|---|---|---|---|---|---|---|---|---|---|---|---|
| | inch | mm | inch | mm | inch | mm | inch | mm | | | | | |
| 1/4-32NS-2B | .125 | 3.18 | .500 | 12.70 | .500 | 12.70 | .344 | 8.74 | — | NLK9040 x 1/8 | Gray | • | |
| 3/8-32NS-2B | .125 | 3.18 | .531 | 13.49 | .625 | 15.88 | .469 | 11.91 | — | NLK9030 x 1/8 | Gray | • | |
| 3/8-32NS-2B | .250 | 6.35 | .531 | 13.49 | .625 | 15.88 | .469 | 11.91 | — | NLK9030 x 1/4 | Gray | • | |

*Other colors available. Please consult factory.

DIMENSIONS FOR REFERENCE ONLY.
Current dimensional drawings can be viewed on our website and CAD drawings can also be downloaded.

RoHS Compliant

# Bushing Seals for Sealed Switch Panel Mounting Hole

## Protect Against & Prevent Seepage/Leakage Through Switch Panel Cutout

These reusable self-sealing washers are designed for use with popular sealed switches and circuit breakers. While such sealed switches are designed to tolerate hostile environments (such as salt spray, wash-downs, lubricating fluids, weather, dust and other contaminants) that may compromise reliable switch operation, *they typically do not seal the panel cutout in which they are mounted*. Hence, these same contaminants may "leak past" the bushing through the panel cutout causing equipment/system failures.

Designed to prevent such leakage, each is fabricated from a stainless steel washer with a bonded high-tear strength silicone rubber sealing ring. The soft resilient ring conforms to the panel surface to seal out harmful contaminants.

- Seals the panel cutout in which the circuit breaker is mounted, protecting behind-panel components from dirt/moisture. No O-ring required.
- Reusable in the event the switch or circuit breaker fails and replacement is needed.
- Easy to install without the need for special tools, sealing compounds, sealing tapes, et al.
- Does not compromise switch or circuit breaker performance.
- Meets stringent Military, UL and Canadian National Standards regarding environmental requirements for electrical enclosures.
- UL Recognized for Type 4X & Type 6 enclosure protection.
- Meets IEC IP66/68 enclosure protection

### SPECIFICATIONS

**Material**.....Stainless steel with bonded silicone rubber conforms to A-A-59588 GR. 50 (both sides P/N 60064; one side only P/N 60225)
**Temperature Range**....-94°F to +400°F (-70°C to +204°C)
**Mounting**.....Either Front or Behind Panel
**Shelf Life**.....In excess of 25 years
**Resistant to**.....Salt spray, sunlight, ozone, weather, fungus, and most acids and lubricating oils
**Agency Recognition**...UL-Recognized to UL Std. 50, Types 1, 2, 3(R)(S), 4(X), 6, 12 & 13. UL Recognition also includes compliance with Canadian National Standards.

### HOW TO ORDER

Specify selected APM boot part number shown in chart below.

| APM Part Number | Compatible Switch Bushing | Washer Diameter | Washer Thickness | Color | Conforms to* |
|---|---|---|---|---|---|
| 60064<br>60225 | 15/32-32 | 0.677"<br>0.660" | 0.120"<br>0.105" | Gray | Meets MIL-B-5423/16-01, MS25196, UL & ULC Recognized |

*APM's policy is to manufacture our HEXSEAL® sealing boots as defined by the requirements of MIL-Spec B-5423 which we regard as the standard for the switch, circuit breaker and potentiometer industry. These requirements were formulated based on our original patent.

**Note:** Where the possibility of ice build-up or other contaminants can accumulate in the toggle breaker external actuating mechanism, we recommend using a full silicone sealing boot which will protect the actuator mechanism and keep it operating smoothly, and its perimeter seal will protect the mounting hole from potential seepage.

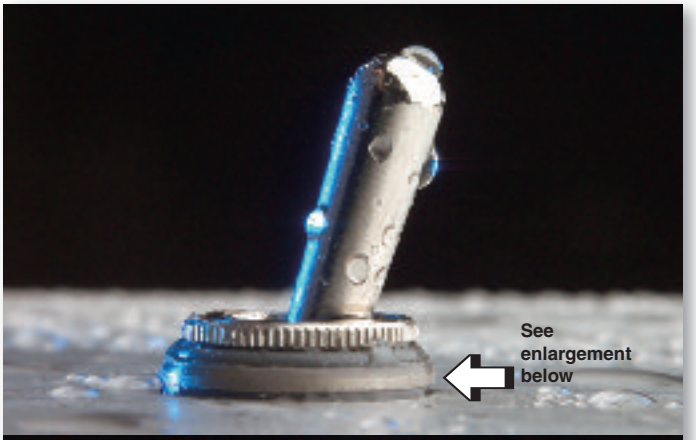

Visit our website for dimensional drawings and to download CAD drawings.

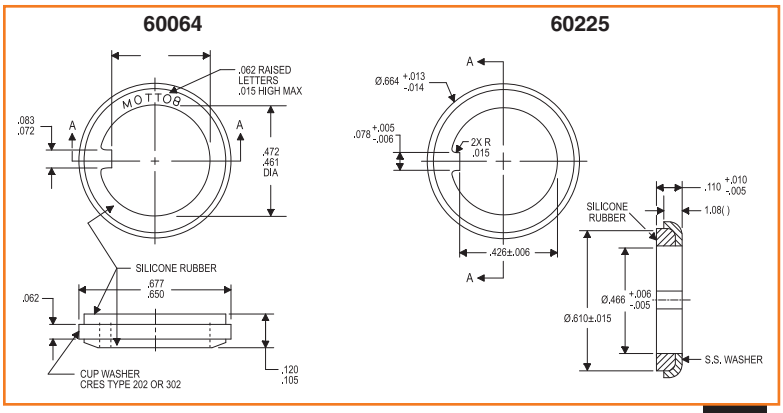


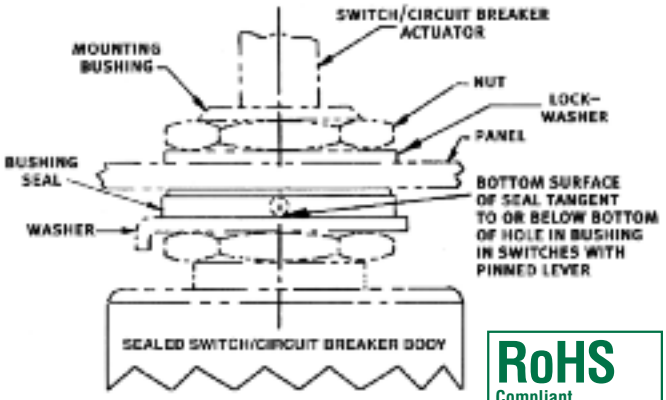


RoHS Compliant

# Rocker Switch Boots

E-SEEL® (Rock-R-Seel™) rocker switch boots are molded from RUBRGLAS™ — APM's proprietary high tear-strength, transparent silicone rubber. These durable and flexible boots seal out dust, dirt, and moisture … without compromising switch operability, position status viewing or legend visibility. Each is designed to fully enclose the switch bezel, while our unique molded-in "panel sealing rib" forms a watertight and dust-tight seal against the front panel surface.

## SPECIFICATIONS

**Material:** APM RUBRGLAS™ (transparent silicone rubber), polymer type, ASTM D1418
**Temperature Range:** -80°F to +400°F (-62°C to +204°C)
**Operational Life:** 50,000 actuations (minimum)
**Resistant to:** Salt spray, sunlight, ozone, weather, fungus, and most acids and lubricating oils
**Agency Recognition:** Rock-R-Seels™ are UL-recognized for US & Canada to UL Std. 50, types 1, 2, 3R, 5, 12, 12K, 13
**Shelf Life:** Excess of 25 years

## HOW TO ORDER

Specify APM boot part number.

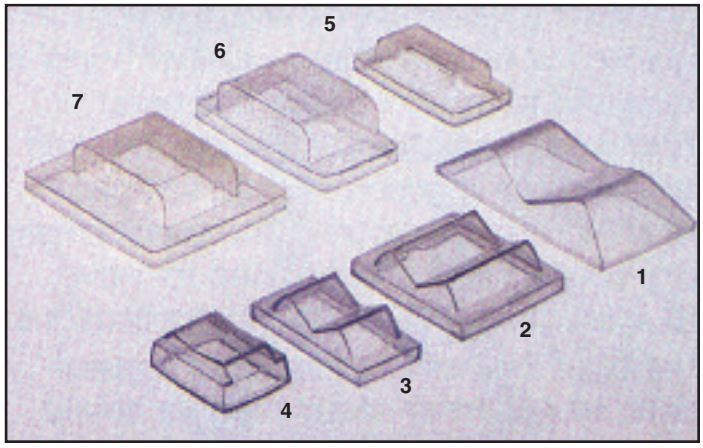


PHOTOS 1-7

### IP54 Rated

| Photo # | E-SEEL Part # | Dimensions | | | | | | | | | | Compatible with These Rocker Switch Manufacturers (Partial List) |
|---|---|---|---|---|---|---|---|---|---|---|---|---|
| | | A | | B | | C | | D | | E | | |
| | | in. | mm | in. | mm | in. | mm | in. | mm | in. | mm | |
| 1 | C1111/7 | .359 | 9.13 | .609 | 15.48 | .937 | 23.81 | 1.703 | 43.26 | .900 | 22.87 | Consult Factory |
| 2 | C1113/62 | .297 | 7.54 | .797 | 20.24 | .687 | 17.46 | 1.093 | 27.78 | .968 | 24.61 | Arrow Hart – 2600 Series |
| 3 | C1113/63 | .297 | 7.54 | .406 | 10.32 | .687 | 17.46 | 1.093 | 27.78 | .515 | 13.10 | Arrow Hart – 2600 Series |
| 4 | C1113/66 | .228 | 5.79 | .348 | 8.84 | .531 | 13.46 | .750 | 19.05 | .531 | 13.49 | Carlingswitch #621 |
| 5 | C1113/70 | .297 | 7.54 | .437 | 11.11 | .875 | 22.23 | 1.218 | 30.96 | .640 | 16.27 | Carlingswitch RSC Series |
| 6 | C1113/71 | .413 | 10.49 | .687 | 17.46 | 1.046 | 26.59 | 1.327 | 36.51 | .703 | 17.86 | Carlingswitch M Series<br>Airpax R11<br>Eaton/Heinemann LC-1 |
| | C1113/80 | .560 | 14.22 | .750 | 19.05 | 1.375 | 34.92 | 1.750 | 44.45 | .900 | 22.86 | Potter W-33 Carling LTI6 |
| 7 | C1113/75 | .413 | 10.49 | .687 | 17.46 | 1.046 | 26.59 | 1.437 | 36.51 | 1.390 | 35.32 | Carlingswitch M Series<br>Airpax R21<br>Eaton/Heinemann LC-2 |
| Not Shown | C1213/53 | .312 | 9.14 | .700 | 19.81 | .700 | 19.81 | 1.120 | 29.21 | .800 | 23.11 | Oslo S Series |
| | C1213/60 | .350 | 10.16 | 1.000 | 21.08 | .820 | 21.08 | 1.120 | 29.21 | .800 | 23.11 | Oslo S Series |

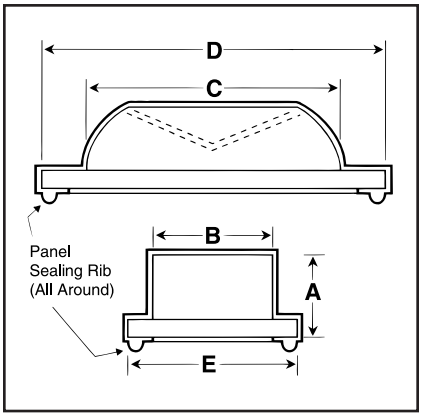


DIMENSIONS FOR REFERENCE ONLY.

Current dimensional drawings can be viewed on our website and CAD drawings can also be downloaded.

RoHS Compliant

**Example:**
Carling Technologies
M Series Rocker Actuator Switch
with C1113/71 E-SEEL

# Economy Switch Seals

## SNAPSEELS®

SNAPSEELS® combine economy with performance for more moderate temperature conditions and lower-demand commercial-grade applications. Each consists of a molded neoprene boot which snaps over a specially designed shouldered mounting nut. These inexpensive boots are an ideal way to protect switches and potentiometers against dust, dirt, grease and moderate amounts of moisture.

### SPECIFICATIONS

**Material:** Boot: Neoprene.
**Color:** Black (other materials and colors available on special order.)
**Temperature Range:** -65°F to +300°F (-53°C to +148°C)
**Shelf Life:** 2 years.
**Mounting Nut:** Aluminum (see table below)
**Installation:** A. Mount the switch using SNAPSEEL shouldered mounting nut.
B. Press SNAPSEEL over switch actuator and snap over nut.

### HOW TO ORDER

Select boot to fit switch type and dimensions. Choose shouldered mounting nut to mate with selected boot. **SEE TABLE BELOW FOR SHOULDERED MOUNTING NUT OPTION.** For example: When ordering a pushbutton boot PN 1211/10, also order its companion shouldered mounting nut P/N 2120/122/1.

## Pushbutton Boots

**Part No. 1211/10**
**Pushbutton Height from panel:** Up to 9/16"
**Pushbutton Diameter:** Up to 1/4"
**Bushing Diameter:** 15/32" maximum

**Part No. 1211/5**
**Pushbutton Height from panel:** Up to 9/16"
**Pushbutton Diameter:** Up to 1/4"
**Bushing Diameter:** 3/8" maximum

**Part No. 1211/32**
**Pushbutton Height from panel:** Up to 19/64"
**Pushbutton Diameter:** Up to 1/8"
**Bushing Diameter:** 1/4" maximum

P/N 1211/10 P/N 1211/5 P/N 1211/32

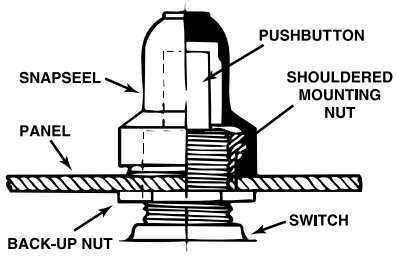


## Toggle Switch Boots

**Part No. 1111/4**
**Bat Handle Height from panel:** 7/8"
**Bat Handle Diameter:** Up to 1/4"
**Bushing Diameter:** 15/32" maximum

**Part No. 1111/9**
**Subminiature Toggle Boot**
**Bat Handle Heights from panel:** Up to 9/16"
**Bat Handle Diameter:** Up to 1/8"
**Bushing Diameter:** 1/4" maximum

P/N 1111/4 P/N 1111/9

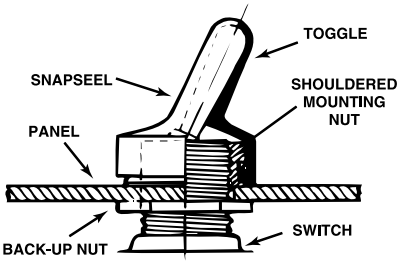


## Rotary Shaft Boots

**Part No. 1312/7**
**Shaft Diameter:** 1/4" nominal
**Bushing Diameter:** 3/8" maximum

**Part No. 1312/8**
**Shaft Diameter:** 1/8" nominal
**Bushing Diameter:** 1/4" maximum

P/N 1312/7 P/N 1312/8

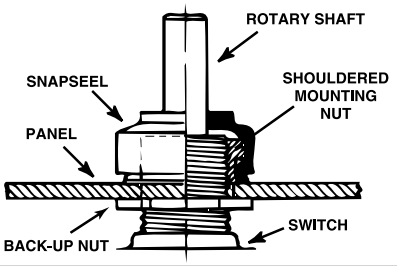


## SNAPSEEL™ Shouldered Mounting Nut Selection Chart

**TO INSURE PROPER DESIGN FUNCTION, SNAPSEEL MUST BE USED WITH APM SHOULDER TYPE NUT (SEE CHART FOR SIZES). METRIC THREAD AVAILABLE ON REQUEST.**

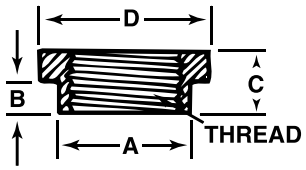


MATERIAL: ALUMINUM

| APM Part No. (Shouldered Nut) | Bushing Thread Size* | For use with SNAPSEEL P/N | Dimensions | | | |
|---|---|---|---|---|---|---|
| | | | A | B | C | D |
| 2120/122/1 | 15/32-32 | 1211/10, 1111/4 | 17/32" | 3/32" | 11/64" | 5/8" |
| 2120/122/2 | 3/8-27 | 1211/5, 1312/7 | 13/32" | 3/32" | 11/64" | 1/2" |
| 2120/122/3 | 3/8-32 | 1211/5, 1312/7 | 13/32" | 3/32" | 11/64" | 1/2" |
| 2120/122/5<br>2120/122/6<br>2120/122/7<br>2120/122/9<br>2120/122/10 | 1/4-40<br>M6 x .75<br>10-48<br>1/4-32<br>12-24 | 1211/32<br>1111/9<br>1312/8 | 9/32" | 3/64" | 3/32" | 5/16" |

*Other thread sizes available. Please consult factory.

RoHS Compliant

# Installation Instructions for Threaded HEXSEAL® & E-SEEL® Boots

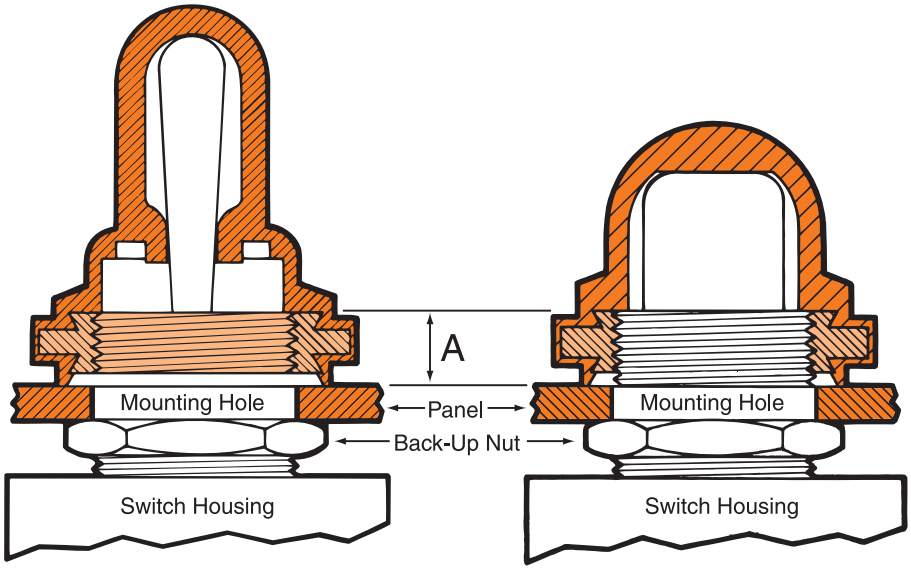


**IMPORTANT — CAUTION**

| STEP 3: THREAD RULE DIMENSION A |
|---|
| **3 to 4** threads (maximum) for all toggle pushbutton and rotary shaft seals (except N5000 series). |
| **2 to 3** threads (maximum) for N5000 series. |

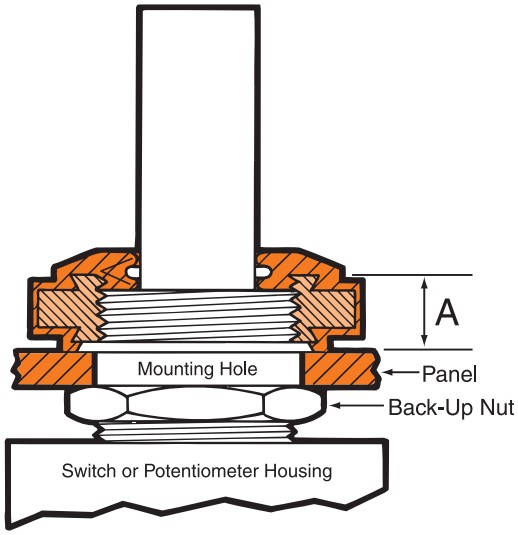


**For proper installation of these boots, follow these five sequential steps. It is EXTREMELY IMPORTANT that the number of threads on the switch/potentiometer bushing EXPOSED ABOVE THE FRONT PANEL SURFACE be within the recommendation (see chart above). Failure to respect these maximums may result in boot damage (such as tearing).**

**STEP 1.** Remove front mounting nut from switch bushing.
**STEP 2.** Put threaded bushing through panel.
**STEP 3.** Adjust back-up nut to allow the specified number of threads to protrude past front of panel (see Dimension "A" above).
**STEP 4.** If needed, install appropriate bushing adaptor.
**STEP 5.** Install switch boot in place of front mounting nut.

**RECOMMENDED INSTALLATION TOOLS:**

- Six point hex socket wrench.
- Spintite.
- Adjustable wrench (without serrated jaws).

For torque setting, consult factory.

# Threaded Bushing Adaptors

| Inside (Bushing) Thread Size (Class 2B) | Outside (Boot) Thread Size (Class 2A) | APM Part Number |
|---|---|---|
| 3/8-32 | 15/32-32 | 2500/1/5* |
| 15/32-32 | 11/16-32 | 2500/1/7 |
| 1/2-32 | 11/16-32 | 2500/1/10 |
| 15/32-32 | 13/16-32 | 2500/1/8 |
| 1/2-24 | 13/16-32 | 2500/1/9 |
| 5/8-24 | 13/16-32 | 2500/1/11 |
| 5/8-24 | 7/8-32 | 2500/1/12 |
| 3/4-32 | 7/8-32 | 2500/1/13* |
| 3/4-20 | 7/8-32 | 2500/1/14* |

*5/32 thick. Additional sizes, including metric, available. Consult factory.

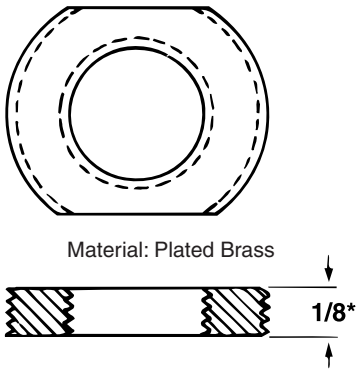


*Unless otherwise noted.

# Custom Switch Boots & Seals...

APM HEXSEAL tailors special boots for special needs. If your application requires boots not shown in this catalog, please call us for custom design assistance. Your need may be satisfied by an inexpensive variation of a standard product or mold. Whether your application calls for custom colors, other bushing/bezel sizes, alternative boot materials or a totally custom design, let us know. We have satisfied diverse requirements including full seals for an array of switches, transparent panel meter boots, and electronic connector seals.

## Pick a Shape ... Any Shape ...

For over sixty years, we've tackled a myriad of product-environmental sealing boot configuration challenges. Drawing on our experience with a wide range of exotic elastomers and high-precision molding, and using the latest computer-aided technology, APM has provided practical and economical solutions for the military, industrial and commercial markets. We welcome the opportunity to provide design assistance. Send us your product, specifications or drawings, and we'll gladly quote.

## ... Any Application

Shown at right are two examples of custom-designed silicone seals for use indoors or out. At top, a single-piece clear silicone rubber seal designed to protect delicate circuitry of the outdoor-mounted controls for a sophisticated audio system from hostile contaminants such as water, dust, dirt and pollen. Silicone rubber preserves tactile feel of buttons for smooth operation. Below, a single-piece tri-color (black, green and clear) silicone rubber seal designed for a remote automotive keyless entry control. With extensive experience in designing and molding a wide range of elastomers, APM specializes in developing cost-effective sealing solutions for electrical and electronic applications.

## Custom Keypads

You're looking at one of many variations of keypad seals used in telecommunications, security, medical, industrial and other applications where environmental protection is essential for long-term, reliable equipment performance.

## Learn more about our other standard and custom products ... Ask for these catalogs:

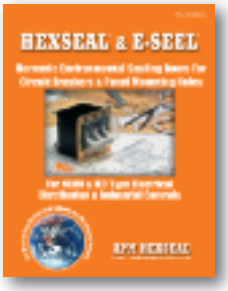


Circuit Breaker Boots
Catalog CB

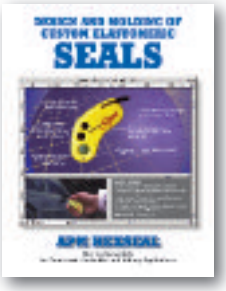


Custom Elastomeric Seals
Catalog CS

Incandescent Lamp Colorizing Filters
Catalog SK

Self-Sealing Fasteners
Catalog SF

**APM HEXSEAL®**
**Electronics Division**
44 Honeck Street • Englewood NJ 07631
(201) 569-5700 • Sales Toll Free (800) 498-9034 • Fax (201) 569-4106
Web: www.apmhexseal.com • E-mail: info@apmhexseal.com

HEXSEALS, E-SEELS, ROCK-R-SEELS, RUBRGLAS, SEELSKREWS and I.Q. SURROUND NUT are U.S. Registered trademarks of APM HEXSEAL CORPORATION.

Printed in U.S.A.
APM-2008