THIS DRAWING IS UNPUBLISHED. RELEASED FOR PUBLICATION -, N/A.
© COPYRIGHT N/A BY TYCO ELECTRONICS CORPORATION. ALL RIGHTS RESERVED.

LOC	DIST
DF	SO

REVISIONS

P	LTR	DESCRIPTION	DATE	DWN	APVD
	AC	REVISED PER ECO-08-026029	13NOV08	CT	SG

PART NO.	A (1)	B	REMARKS	
839564-1	12.00 [304.8]	.38 [9.7]	(5)	
839564-2	24.00 [609.6]	.38 [9.7]	(5)	
839564-3	4.50 [114.3]	.38 [9.7]	(5)	
839564-4	6.50 [165.1]	.38 [9.7]	(5)	
839564-5	18.00 [457.2]	–		OBSOLETE
839564-6	17.00 [431.8]	–		OBSOLETE
839564-7	15.00 [381.0]	.38 [9.7]	(5)	
839564-8	60.00 [1524.0]	–		
839564-9	120.00 [3048.0]	.38 [9.7]	(5)	OBSOLETE
1-839564-0	96.00 [2438.4]	.38 [9.7]	(5)	OBSOLETE
1-839564-1	144.00 [3657.6]	.38 [9.7]	(5)	
1-839564-2	300.00 [7620.0]	.38 [9.7]	(5)	OBSOLETE
1-839564-3	48.00 [1219.2]	.38 [9.7]	(5)	
1-839564-4	72.00 [1828.8]	.38 [9.7]	(5)	
1-839564-5	1575.00 [40005.0]	.38 [9.7]	(5)	OBSOLETE
1-839564-6	420.00 [10668.0]	.38 [9.7]	(5)	OBSOLETE
1-839564-7	118.00 [2997.2]	.38 [9.7]	(5)	
1-839564-8	6.00 [152.4]	.38 [9.7]	(5)	
1-839564-9	36.00 [914.4]	.38 [9.7]	(5)	
2-839564-0	240.00 [6096.0]	.38 [9.7]	(5)	
2-839564-1	394.00 [10007.6]	.38 [9.7]	(5)	
2-839564-2	984.00 [24993.6]	.38 [9.7]	(5)	OBSOLETE
2-839564-3	19.00 [482.6]	.38 [9.7]	(5)	OBSOLETE
2-839564-4	10.00 [254.0]	.38 [9.7]	(5)	OBSOLETE
2-839564-5	108.00 [2743.2]	.38 [9.7]	(5)	OBSOLETE
2-839564-6	78.75 [2000.2]	.38 [9.7]	(5)	
2-839564-7	35.00 [889.0]	.38 [9.7]	(5)	OBSOLETE
2-839564-8	30.00 [762.0]	.38 [9.7]	(5)	OBSOLETE
2-839564-9	18.00 [457.2]	.38 [9.7]	(5)	
3-839564-0	88.12 [2238.2]	.38 [9.7]	(5)	
3-839564-1	40.00 [1016.0]	.38 [9.7]	(5)	
3-839564-2	600.00 [15240.0]	.38 [9.7]	(5)	OBSOLETE
3-839564-3	157.50 [4000.5]	.38 [9.7]	(5)	
3-839564-4	196.88 [5000.8]	.38 [9.7]	(5)	
3-839564-5	37.40 [950.0]	.38 [9.7]	(5)	OBSOLETE
3-839564-6	16.00 [406.4]	.38 [9.7]	(5)	
3-839564-7	20.00 [508.0]	.38 [9.7]	(5)	
5-839564-1	12.00 [304.8]	.38 [9.7]	(6)	
5-839564-2	24.00 [609.6]	.38 [9.7]	(6)	
5-839564-7	15.00 [381.0]	.38 [9.7]	(6)	
6-839564-3	48.00 [1219.2]	.38 [9.7]	(6)	
6-839564-7	118.00 [2997.2]	.38 [9.7]	(6)	
6-839564-9	36.00 [914.4]	.38 [9.7]	(6)	
7-839564-0	240.00 [6096.0]	.38 [9.7]	(6)	
7-839564-1	394.00 [10007.6]	.38 [9.7]	(6)	
7-839564-6	78.75 [2000.2]	.38 [9.7]	(6)	
8-839564-0	88.12 [2238.2]	.38 [9.7]	(6)	
8-839564-1	40.00 [1016.0]	.38 [9.7]	(6)	
8-839564-3	157.50 [4000.5]	.38 [9.7]	(6)	
8-839564-4	196.88 [5000.8]	.38 [9.7]	(6)	

(1) TOLERANCE OF LEAD LENGTH:
UP TO 24 INCHES [609.6] = ±.12 [3.0]
24 INCHES [609.6] & UP = ±1%

2 MARKED PER MIL-STD-130.

3 TO MATE WITH AMP LGH-2 RECEPTACLE WITH 1.43 [36.3] BARREL DEPTH.

4 OPERATING VOLTAGE: 30 KVDC AT 0 TO 70,000 FEET, -55°C TO +125°C.

(5) PIGTAIL IS SOLDER DIPPED.

(6) INSULATION CUT, BUT NOT REMOVED.

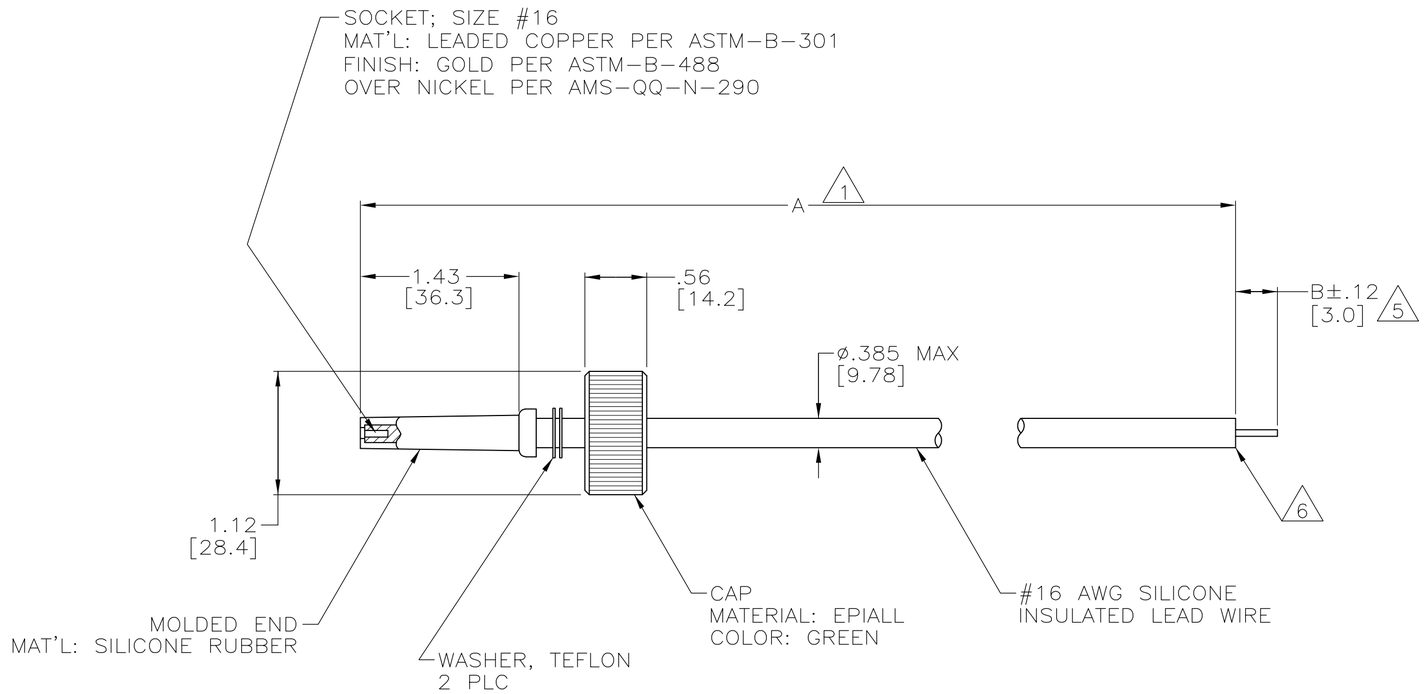

839564

THIS DRAWING IS A CONTROLLED DOCUMENT.

DIMENSIONS: INCHES [mm]

TOLERANCES UNLESS OTHERWISE SPECIFIED:
0 PLC ± –
1 PLC ± –
2 PLC ± .02 [0.5]
3 PLC ± .005 [0.13]
4 PLC ± –
ANGLES ± –

MATERIAL: SEE CALLOUTS
FINISH: SEE CALLOUTS

DWN C.C.THOMAS 15-FEB-93
CHK S.GLATFELTER 16-FEB-93
APVD S.GLATFELTER 16-FEB-93
PRODUCT SPEC —
APPLICATION SPEC —
WEIGHT —

Tyco Electronics
Tyco Electronics Corporation
Harrisburg, PA 17105-3608

NAME: LEAD ASSY SINGLE END LGH-2

SIZE	CAGE CODE	DRAWING NO	RESTRICTED TO
A2	00779	C-839564	—

CUSTOMER DRAWING | SCALE 1:1 | SHEET 1 OF 1 | REV AC