THIS DRAWING IS UNPUBLISHED. RELEASED FOR PUBLICATION –,– .
© COPYRIGHT – BY TYCO ELECTRONICS CORPORATION. ALL RIGHTS RESERVED.

LOC	DIST
AJ	16

REVISIONS

P	LTR	DESCRIPTION	DATE	DWN	APVD
	A	REVISED PER EC 0S14–0150–05	30AUG05	BM	JL

1. 3.175 [.125] MAX PANEL THICKNESS.

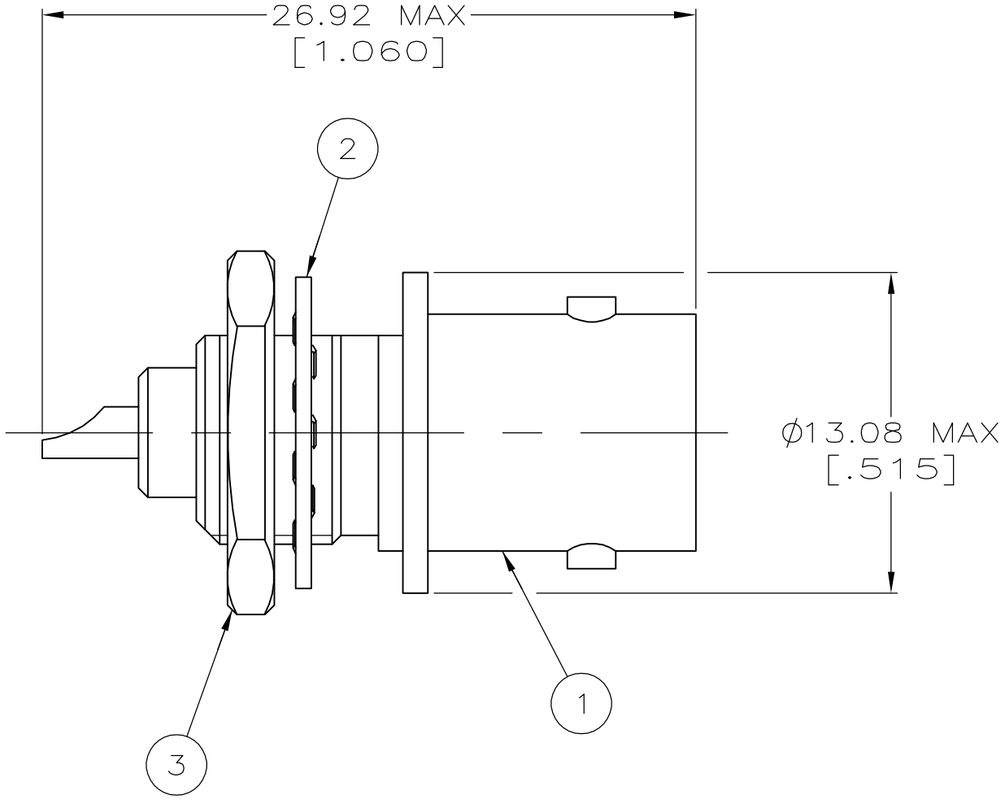

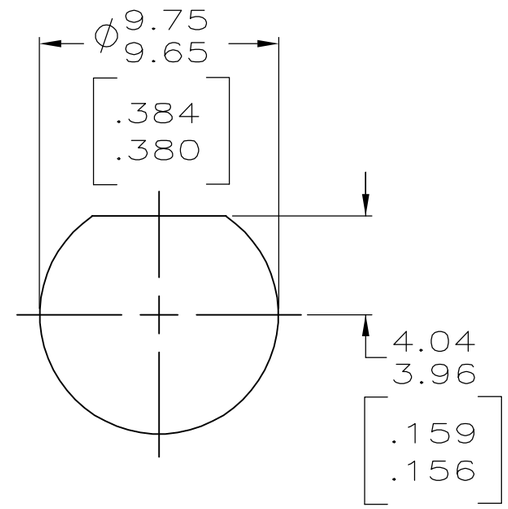

RECOMMENDED PANEL CUTOUT

1–330249–1	1–329492–1	227717–3	5227715–3
3 JAM NUT QTY=1	2 LOCKWASHER QTY=1	1 JACK ASSY QTY=1	PART NUMBER

THIS DRAWING IS A CONTROLLED DOCUMENT.

DIMENSIONS: mm [INCHES]

TOLERANCES UNLESS OTHERWISE SPECIFIED:
0 PLC ± –
1 PLC ± –
2 PLC ± –
3 PLC ± –
4 PLC ± –
ANGLES ± –

MATERIAL –

FINISH –

DWN L. VARELA – DOCK5 21APR2005
CHK J. HAVENER 21APR2005
APVD J. LIPPERT 21APR2005
PRODUCT SPEC 108–12079
APPLICATION SPEC –
WEIGHT –

tyco Electronics
Tyco Electronics Corporation
Harrisburg, Pa 17105–3608

NAME
SOLDER JACK, 50 OHM
SERIES BCN
–

SIZE	CAGE CODE	DRAWING NO	RESTRICTED TO
A3	00779	C–5227715	–

CUSTOMER DRAWING

SCALE	SHEET	REV
4:1	1 OF 1	A