DRAWING MADE IN THIRD ANGLE PROJECTION

THIS DRAWING IS UNPUBLISHED. RELEASED FOR PUBLICATION ,19 .

© COPYRIGHT 19 BY AMP INCORPORATED. ALL INTERNATIONAL RIGHTS RESERVED.

LOC	DIST	P	F
G	14		

REVISIONS

ZONE	LTR	DESCRIPTION	DATE	APPD
	D	EC 0720-0279-93	6-21-93	SSG BB

AMP
WIRE RANGE

4 AWG
STRANDED

METRIC

DIMENSIONS LISTED IN mm [INCHES]

1. TONGUE MATERIAL THK 1.22±0.08[.048±.003] FOR 9.70[.328] MAX INS DIA

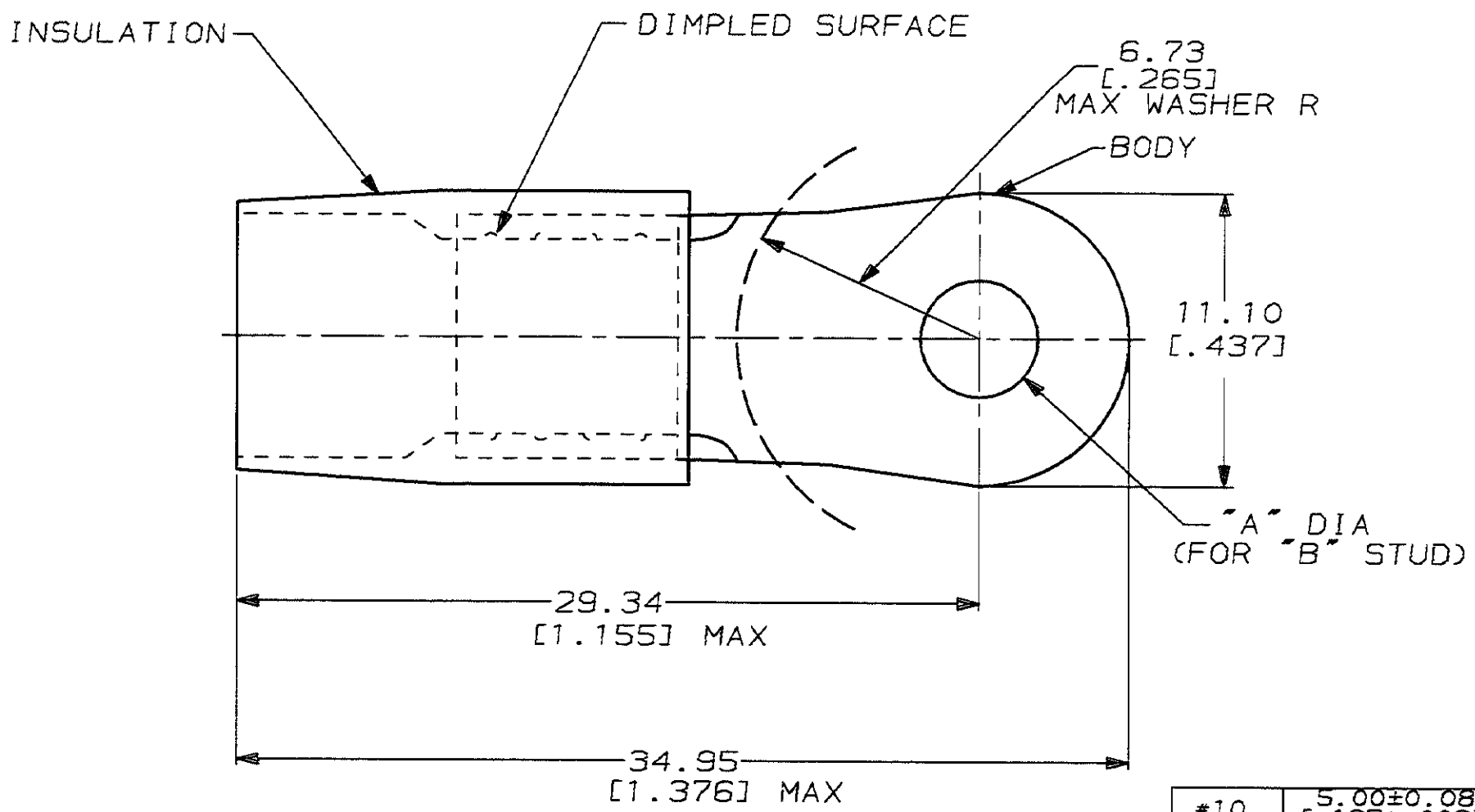

"B"	"A"	QTY	PACKAGE TYPE	PART NO
#10	5.00±0.08 [.197±.003]	–	LOOSE PC	1-331456-0
#8	4.43±0.08 [.171±.003]	–		331456

AMP INCORPORATED
CUSTOMER SERVICE SYSTEMS

FOR ADDITIONAL PRODUCT INFORMATION OR COPIES OF DRAWINGS AND TECHNICAL DOCUMENTS	PRODUCT INFORMATION CENTER 1-800-522-6752
FOR APPLICATION TOOLING INFORMATION	TOOLING ASSISTANCE CENTER 1-800-722-1111
FOR ORDER ENTRY	1-800-526-5142

THIS DRAWING IS A CONTROLLED DOCUMENT FOR AMP INCORPORATED. IT IS SUBJECT TO CHANGE AND THE CONTROLLING ENGINEERING ORGANIZATION SHOULD BE CONTACTED FOR THE LATEST REVISION.

MAX RECOMMENDED OPERATING TEMPERATURE: 105°c

VOLTAGE RATING: - -

CIRCULAR MIL AREA: 16.8-26.7mm² [33,100-52,600] STRANDED

DO NOT SCALE PRINT. UNLESS SPECIFIED ~~DIMENSIONS IN mm [INCHES]~~ TOLERANCES ON:
2 PLC DEC ± 0.20[.008]
3 PLC DEC ± -
ANGLES ± -

MATERIAL
COPPER PER ASTM B-152
NYLON (MIL-M-20693) TYPE 1
COLOR: YELLOW

FINISH
TIN PLATE PER MIL-T-10727

DR	6-21-93	S.S. GOULDEN
CHK	6-21-93	R. HERSEY
APPD	6-21-93	B. BARE
APPD	6-21-93	M. ELLIS

PRODUCT SPEC –

APPLICATION SPEC –

WEIGHT –

AMP Incorporated
Harrisburg, PA 17105-3608

NAME
TERMINAL, RING TONGUE, TERMINYL
WIRE SIZE: 4 AWG

SIZE	CAGE CODE	DRAWING NO
B	00779	C-331456
SCALE NTS		SHEET 1 OF 1

CUSTOMER DRAWING

AMP 1470-15 REV 3-92

23 JUN 1993 11:54:05 AMPT1122 <UU128A>DEPT1132>AMPT1122>U.CUSTERMINYL