THIS DRAWING IS UNPUBLISHED. RELEASED FOR PUBLICATION 02-05-2002 ,- .
© COPYRIGHT 2002 By - ALL RIGHTS RESERVED.

LOC	DIST
E	B

REVISIONS

P	LTR	DESCRIPTION	DATE	DWN	APVD
	A1	REVISED PER ECO-11-005033	31MAR11	RK	HMR

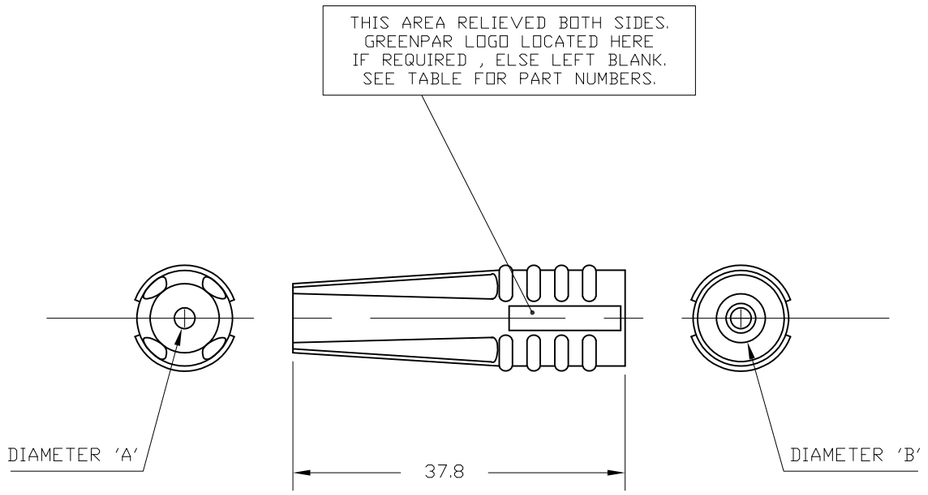

SUITABLE FOR THE FOLLOWING CABLES
GROUP 1 RG174A/U, 188A/U, 316/U, URM95, RG179B/U, 187A/U, URM111
GROUP 2 RG58C/U, 141A/U, URM43,76, BELDEN9907, RG55B/U, 142B/U, 223/U, 400/U, URM301
GROUP 3 RG59B/U, 62A/U, 140/U, URM70/90

	CABLE GROUPS					
	GROUP 1 RG174 etc		GROUP 2 RG58 etc		GROUP 3 RG59 etc	
DIAM. A	3.2/3.6 tapering		4.9/5.6 tapering		5.7/6.4 tapering	
DIAM. B	5.6		5.9		7.1	
BLACK	1- - 6	2- - 6	3- - 6	4- - 6	5- - 6	6- - 6
RED	1- - 5	2- - 5	3- - 5	4- - 5	5- - 5	6- - 5
GREEN	1- - 4	2- - 4	3- - 4	4- - 4	5- - 4	6- - 4
YELLOW	1- - 3	2- - 3	3- - 3	4- - 3	5- - 3	6- - 3
BLUE	1- - 2	2- - 2	3- - 2	4- - 2	5- - 2	6- - 2
WHITE	1- - 1	2- - 1	3- - 1	4- - 1	5- - 1	6- - 1
ORANGE	1- - 0	2- - 0	3- - 0	4- - 0	5- - 0	6- - 0
	WITH LOGO	WITHOUT LOGO	WITH LOGO	WITHOUT LOGO	WITH LOGO	WITHOUT LOGO
	FIGURES ARE PREFIX AND SUFFIX TO BASE NUMBER EG : 1-1478996-4. USE THE BASE NUMBER 1478996 THROUGHOUT THE TABLE.					

10 SLEEVES (BOOTS) ARE PACKED INTO A SEALED PLASTIC BAG .
10 BAGS ARE PACKED INTO A BOX.
(QTY PER BOX = 100 ITEMS)

THIS DRAWING IS A CONTROLLED DOCUMENT.

DIMENSIONS: mm

TOLERANCES UNLESS OTHERWISE SPECIFIED:

0 PLC	± -
1 PLC	± 0.2
2 PLC	± -
3 PLC	± -
4 PLC	± -
ANGLES	± -

MATERIAL: PVC

FINISH: LIGHT SPARK

DWN R.GOODALL 02-MAY-02
CHK A.BEKEN 02-05-02
APVD C.KAMINSKI 02-05-02
PRODUCT SPEC N/A
APPLICATION SPEC N/A
WEIGHT -

TE Connectivity

NAME: STRAIN RELIEF SLEEVES (BOOTS) FOR R/F COAX CONNECTORS CABLE GROUPS RG174,RG58,RG59

SIZE	CAGE CODE	DRAWING NO	RESTRICTED TO
A3	00779	C-1478996	-

CUSTOMER DRAWING | SCALE NTS | SHEET 1 OF 1 | REV A1