THIS DRAWING IS UNPUBLISHED. RELEASED FOR PUBLICATION -,- .
© COPYRIGHT - By - ALL RIGHTS RESERVED.

LOC	DIST
AF	50

REVISIONS

P	LTR	DESCRIPTION	DATE	DWN	APVD
	M	REVISED PER ECR-12-013445	18OCT12	KH	PD

1 CONTINUOUS STRIP ON REELS.

2 MAX FIRST ENGAGEMENT FORCE, 20 LBS, USING GAGE 100505.

3 FEED TO BE .840±.005.

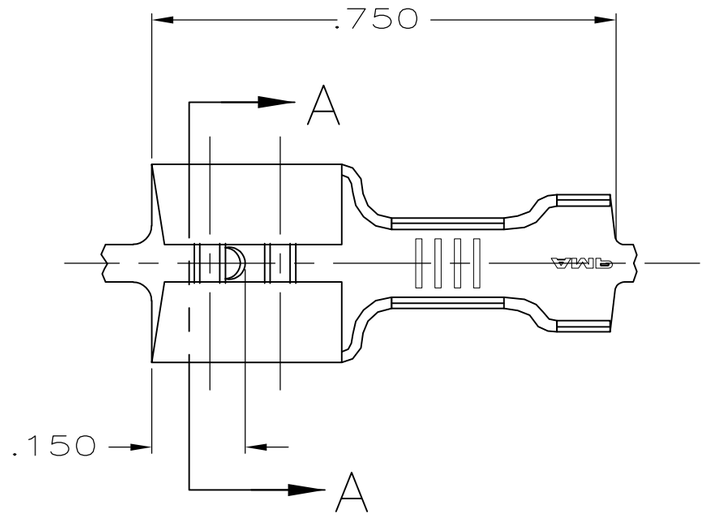

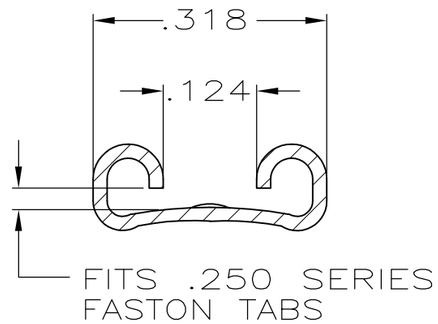

SECTION A–A
SCALE 5:1

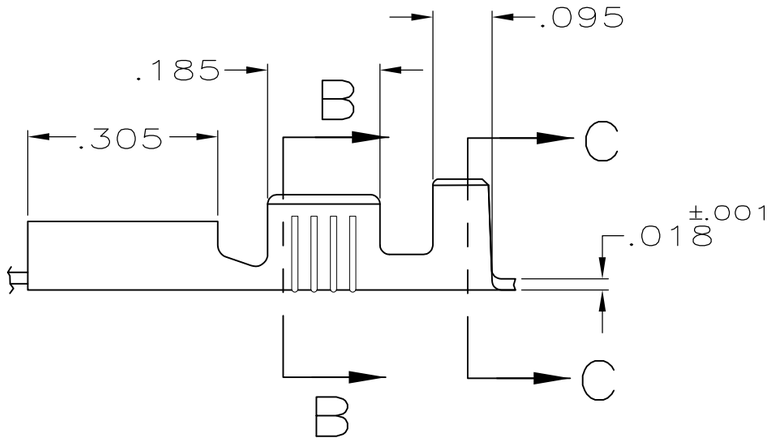

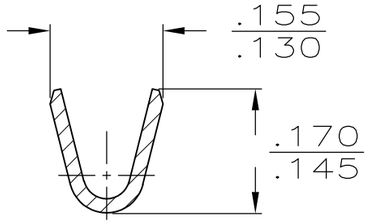

SECTION B–B
SCALE 5:1

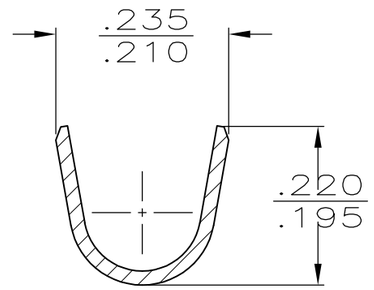

SECTION C–C
SCALE 5:1

.120–.170 DIA	18–14 AWG	.032	41832
INSULATION RANGE	WIRE SIZE	MATING TAB THK ±.001	PART NO

THIS DRAWING IS A CONTROLLED DOCUMENT.

DIMENSIONS: INCHES

TOLERANCES UNLESS OTHERWISE SPECIFIED:

0 PLC	± –
1 PLC	± –
2 PLC	± –
3 PLC	± .015
4 PLC	± –
ANGLES	± –

MATERIAL: BRASS

FINISH: TIN

DWN	JR RUTH	6/13/91
CHK	MS FEHER	6/13/91
APVD	C MEYERS	6/13/91
PRODUCT SPEC	—	
APPLICATION SPEC	—	
WEIGHT	—	

TE Connectivity

NAME: RECEPTACLE, FASTON,™ .250 SERIES

SIZE	CAGE CODE	DRAWING NO	RESTRICTED TO
A3	00779	C-41832	—

CUSTOMER DRAWING

SCALE	SHEET	REV
4:1	1 OF 1	M