PART NAME	CO-LOCATION ADD-A-RACK	PART No.	DC-8135

MATERIAL:

REAR DOORS & WIRE DUCTS	20 GA. STEEL
REAR DOOR STIFFENERS	18 GA. STEEL
TOP, BOTTOM, DIVIDER & DOORSTOPS	16 GA. STEEL
VERTICAL RAILS & RAIL SUPPORTS	14 GA. STEEL
PANEL MOUNTING RAILS, TOP SUPPORT & HINGE BRACKETS	12 GA. STEEL
PLEXIGLAS DOOR FRAMES	ALUMINUM EXTRUSION
PLEXIGLAS DOOR PANELS	3/16 THICK PLEXIGLAS

FINISH:

FRAME ASSEMBLY, REAR DOORS, PLEXIGLAS DOOR FRAMES, TOP SUPPORT, HINGE BRACKETS, DIVIDER & WIRE DUCTS	BLACK TEXTURED
PANEL MOUNTING RAILS, & DOORSTOPS	SMOOTH BLACK
PLEXIGLAS DOOR PANELS	SMOKE GRAY

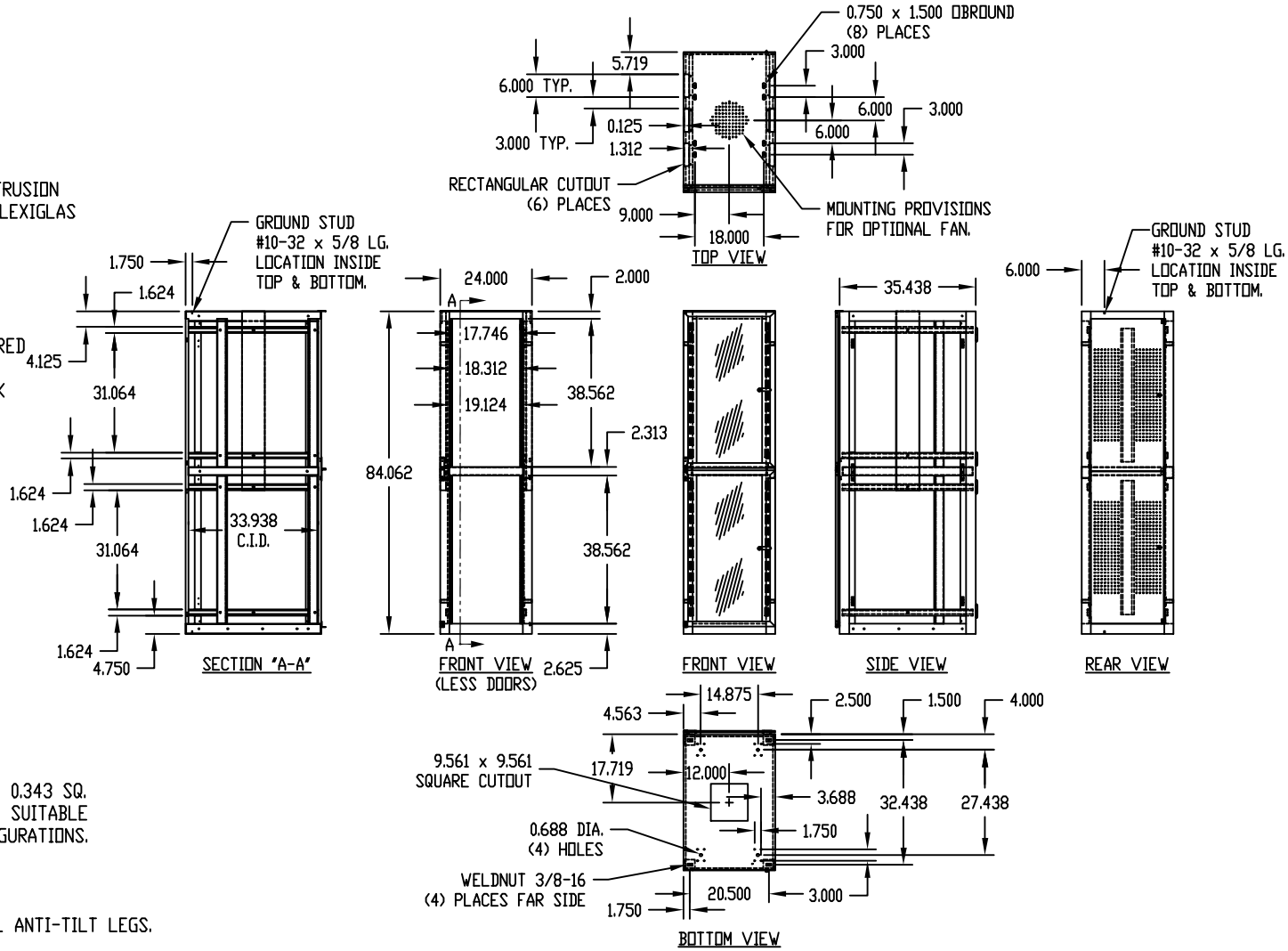

NOTES:

1. FULLY ADJUSTABLE PANEL MOUNTING RAILS WITH 0.343 SQ. HOLES ON E.I.A. UNIVERSAL SPACING WHICH ARE SUITABLE FOR A VARIETY OF EQUIPMENT MOUNTING CONFIGURATIONS.
2. MOUNTING HOLES PIERCED IN BASE FOR CASTERS.
3. HOLES IN SIDE OF BASE FOR MOUNTING OPTIONAL ANTI-TILT LEGS.

Mouser Electronics

Authorized Distributor

Click to View Pricing, Inventory, Delivery & Lifecycle Information:

Bud Industries:

DC-8135