REVISIONS			
REV	DESCRIPTION	DATE	APPROVED
01_0	RELEASED		1/20/89

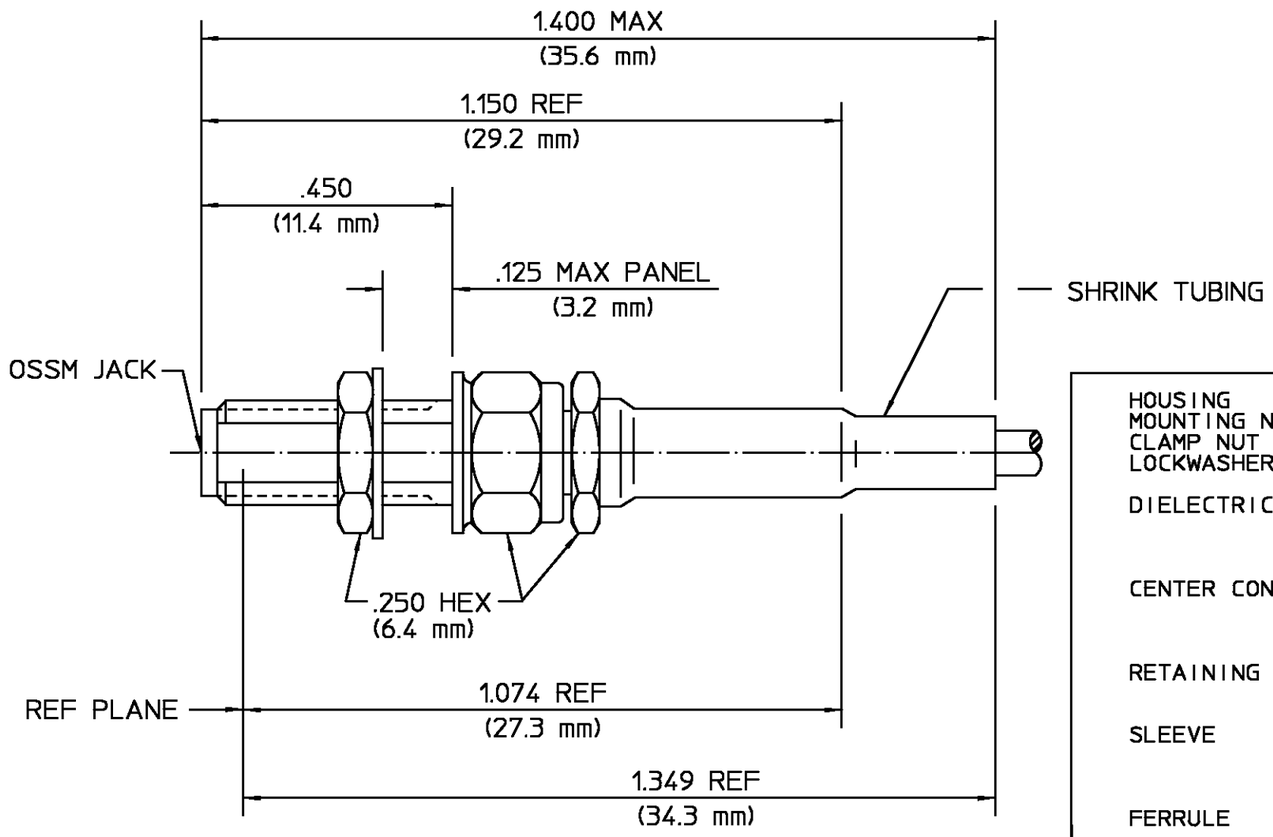

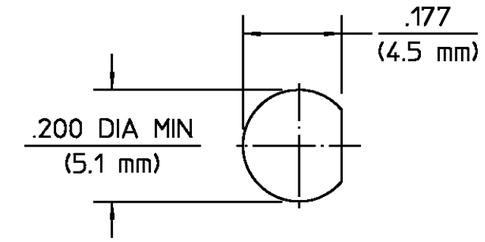

RECOMMENDED MOUNTING HOLE

COMPONENT	MATERIAL	FINISH
HOUSING MOUNTING NUT CLAMP NUT LOCKWASHER	STAINLESS STEEL PER ASTM-A484 AND ASTM-A582, TYPE 303	GOLD PLATE PER MIL-G-45204 OVER NICKEL PLATE PER QQ-N-290LATE PER
DIELECTRIC	TFE FLUOROCARBON PER MIL-P-19468 AND FED SPEC L-P-403	N/A
CENTER CONTACT	BERYLLIUM COPPER PER QQ-C-530,ALLOY 173	GOLD PLATE PER MIL-G-45204 OVER COPPER PLATE PER MIL-C-14550
RETAINING RING	BERYLLIUM COPPER PER QQ-C-533	N/A
SLEEVE	BRASS PER QQ-B-626 COMP 360	GOLD PLATE PER MIL-G-45204 OVER COPPER PLATE PER MIL-C-14550
FERRULE	SOFT COPPER ALLOY	GOLD PLATE PER MIL-G-45204 OVER COPPER PLATE PER MIL-C-14550
SHRINK TUBING	HEAT SHRINKABLE POLYOLEFIN COMPOUND MIL-I-23053	N/A

NOTES:

1. DESIGNED FOR USE WITH RD 196 & RD 178 DOUBLE BRAIDED CABLE
2. CAPTURED CENTER CONTACT

CABLE ENTRY DIAMETER MINIMUM	
CONTACT	.023
SLEEVE	.0367
DIELECTRIC	.039

UNLESS OTHERWISE SPECIFIED DIMENSIONS ARE IN INCHES
TOLERANCE ON
FRAC. ± 1/64 DEC. ±.005 ANGLES ± 1°

These drawings and specifications are the property of Omni Spectra Incorporated and shall not be reproduced or copied or used in whole or in part as the basis for the manufacture or sale of item(s) without written permission.

DRAWN BY K.C.MAHER DATE 1/18/89
CHECKED BY L.ROSS 1/20/89
APP'D BY 1/20/89

USE ASS'Y PROCEDURE

NO. A.P. 408-04772 (10-059)

AMP

AMP Incorporated
140 Fourth Avenue
Waltham, MA 02451-7599

TITLE OSSM BULKHEAD FEEDTHRU CABLE JACK CRIMP ATTACHMENT

SIZE	CODE IDENT NO.		REV
B	26805	1034-5009-18	01_0
SCALE 4:1			SHEET 1 OF 1

CUSTOMER DRAWING

AMP PART # 1058596-1
SHEET 1 OF 1 REV A