THIS DRAWING IS UNPUBLISHED. RELEASED FOR PUBLICATION – ,– .
© COPYRIGHT – By – ALL RIGHTS RESERVED.

LOC	DIST
H	—

REVISIONS

P	LTR	DESCRIPTION	DATE	DWN	APVD
	A	INITIAL RELEASE	27NOV2013	GSK	BvH
	A1	ECR–14–015049	13OCT2014	GSK	BvH

NOTES:
Tolerances cable lengths:

0m to 0.5m	+30mm
0.5m to 1.0m	+50mm
1.0m to 3.0m	+100mm
< 3.0m	+1.5%

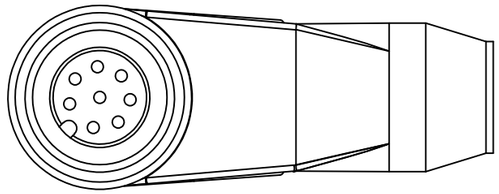

VIEW 'A'

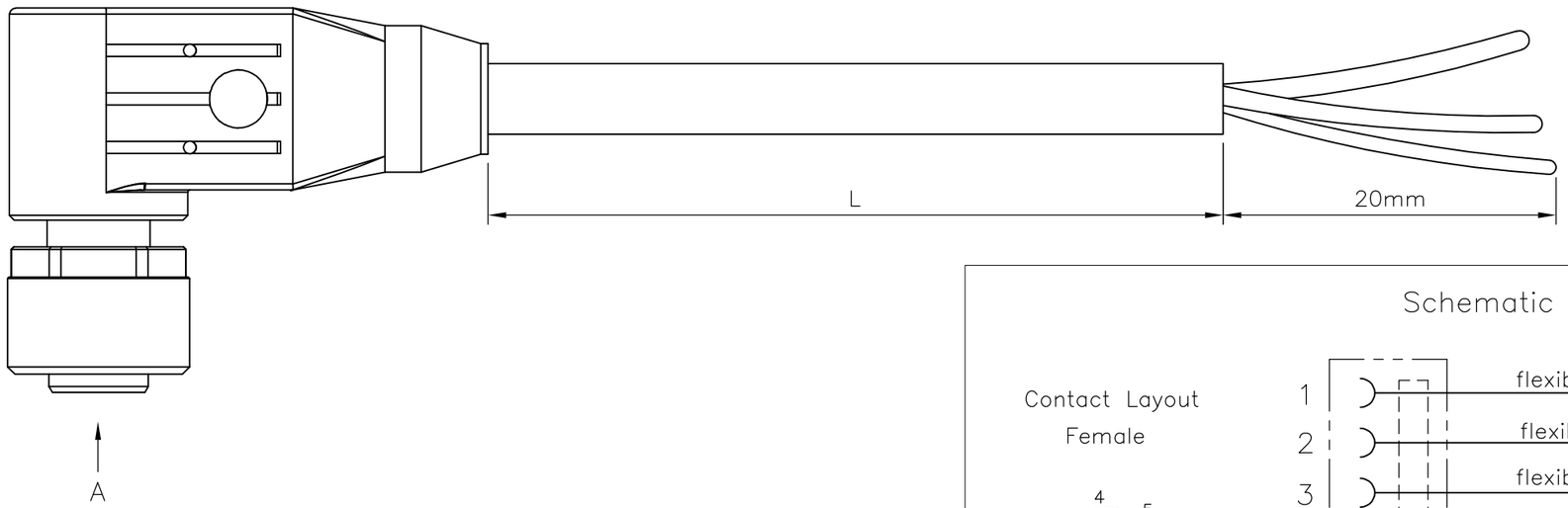

Schematic diagram

Contact Layout
Female

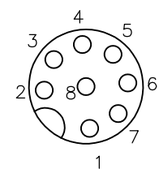

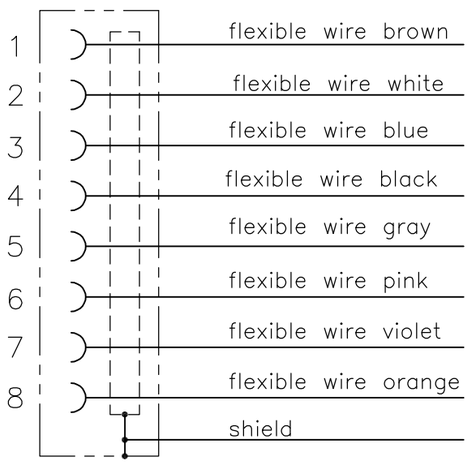

TECHNICAL DATA	
Operating voltage	max. 30 V AC/DC
Operating current per contact	max. 2 A
Locking of ports	Screw thread M12 x 1 mm (recommended torque 0.6 Nm) self–securing
Protection	IP65 and IP67 when plugged and screwed down (EN 60529)

PUR CABLE	
No./diameter of wires	8 x 0.25 mm²
Wire isolation	PP (br, wh, bl, bk, gr, pk, vi, or)
C–track properties	2 million
Jacket	PUR (UL/CSA)
Outer diameter	approx. 7.0 mm
Bend radius (moving)	10 x outer diameter
Temperature range (fixed)	–40...+80 °C
Temperature range (mobile)	–20...+80 °C

	LENGTH"L"	MATERIAL	JACKET COLOR	TE PN	DESCRIPTION	ITEM
8 pos	10mtr	PUR	Grey	2273103–4	8x24AWG PUR 10.0m	4
	5mtr			2273103–3	8x24AWG PUR 5.0m	3
	3mtr			2273103–2	8x24AWG PUR 3.0m	2
	1.5mtr			2273103–1	8x24AWG PUR 1.5m	1

THIS DRAWING IS A CONTROLLED DOCUMENT.

DIMENSIONS: mm

TOLERANCES UNLESS OTHERWISE SPECIFIED:
0 PLC ± –
1 PLC ± –
2 PLC ± –
3 PLC ± –
4 PLC ± –
ANGLES ± –

MATERIAL –
FINISH –

DWN SATHISH KUMAR .G 27NOV2013
CHK B.VELDHOVEN 27NOV2013
APVD A.VAN ZANDVOORT 27NOV2013
PRODUCT SPEC 108–19483
APPLICATION SPEC 114–32127
WEIGHT –

TE Connectivity

NAME M12 X 1.0 ANGLED SOCKET PIGT SHLD A

SIZE	CAGE CODE	DRAWING NO	RESTRICTED TO
A3	00779	C–2273103	—

CUSTOMER DRAWING

SCALE NTS | SHEET 1 OF 1 | REV A1