SYMBOL DEFINITION		
A DIMENSION WITHOUT AN INSPECTION REPORT SYMBOL (2) DOES NOT REQUIRE INSPECTION. IT MAY BE CONTROLLED ON THE INDIVIDUAL COMPONENT DRAWING.	TOTAL NO OF INSPECTIONS REQUIRED	26
	LAST NO. USED	9

MISSING SYMBOLS
NO MISSING SYMBOL NUMBER

DWG STATUS					ZONE	REVISION HISTORY	AUTH	DR	APVD 1	APVD 2
DATE	STG	REV	N/P	CHG						
19JL02	R	05	AD	-		ADDED OPTIONAL CONSTRUCTION VIEW, LOGO NOTE & RECYCLE CODE NOTE	228204	JFN	ESF	GO

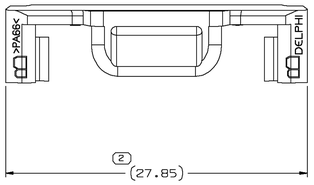

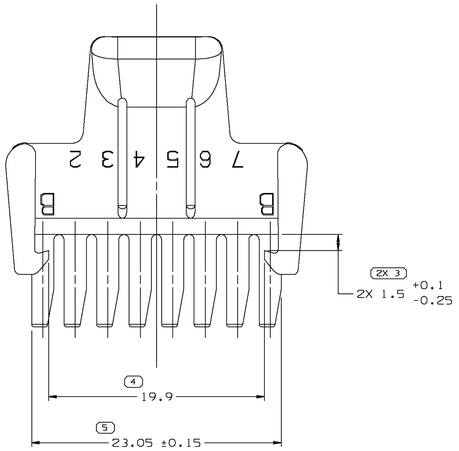

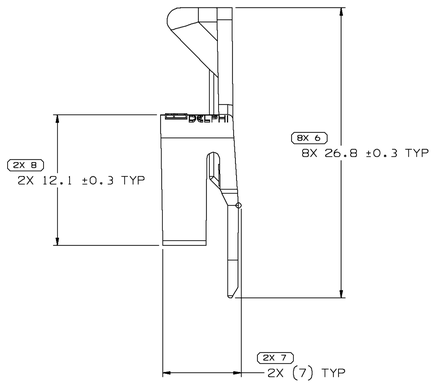

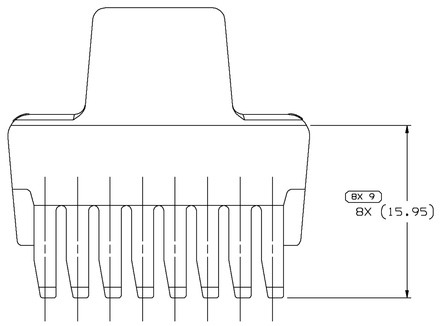

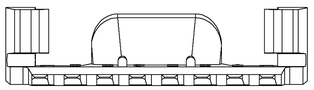

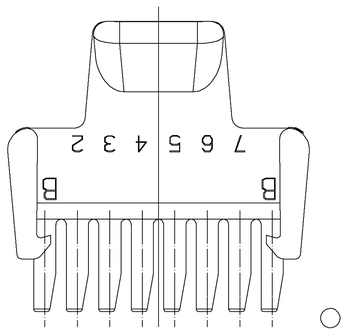

OPTIONAL CONSTRUCTION

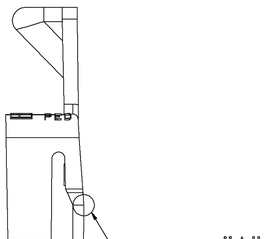

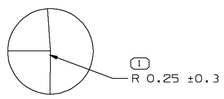

DETAIL "A"
SCALE 20:1

NOTES

1. UNLESS OTHERWISE SPECIFIED AND/OR INDICATED:
   DIMENSIONS ARE TO FACE OF VIEW SHOWN AND AUTOMATICALLY ROUNDED BY COMPUTER FOR INSPECTION (SEE MATH MODEL FOR PRECISE DIMENSIONS). FOR ALL OTHER DIMENSIONS NOT SHOWN BUT REQUIRED FOR TOOL BUILD, SEE MATH MODEL FOR PRECISE TOOL PATH DATA.
2. MATERIAL RECYCLING CODE >PA66< PER SAE J1344. (2.3)X(0.1) RAISED CHARACTERS AS SHOWN TO BE LOCATED ON ANY EXTERIOR SURFACE. OPTIONAL CONSTRUCTION TO BE NO MATERIAL RECYCLING CODE.
3. MATING COMPONENTS OR EQUIVALENT:
   CONNECTOR 12048346
4. (2.3)X(0.1) RAISED DELPHI CORPORATE BRAND TO BE LOCATED ON ANY EXTERIOR SURFACE, PREFERABLY VISIBLE AT FINAL ASSEMBLY. OPTIONAL CONSTRUCTION TO BE "PED" OR NO LOGO.
5. THIS TPA HAS A POSSIBLE RATTLE CONDITION. SPOT TAPE MAY BE ADDED TO TPA AND ADJACENT CABLES TO PREVENT RATTLE IN CUSTOMER SENSITIVE AREAS OF THE VEHICLE.

(4) PROCESS SENSITIVE DIMENSION

DIMENSIONS ENCLOSED IN ( ) INDICATE REFERENCE DIMENSIONS AND NO TOLERANCE LIMITS ARE ESTABLISHED

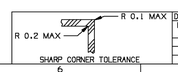

DIMENSIONAL RANGE (MM)										CHART E1
FROM	> 0	> 20	> 30	> 70	>100	>150	>200	>250	>300	
TO	20	30	70	100	150	200	250	300	400	
TOLERANCE UNLESS OTHERWISE SPECIFIED										
	±0.15	±0.2	±0.3	±0.4	±0.5	±0.6	±0.8	±1	±1.2	
ANGULAR TOLERANCE ±2°										

THIRD ANGLE PROJECTION

DO NOT SCALE

USE MATH DATA

UNIGRAPHICS

DWG TYPE: PART DRAWING

STYLE

VOLUME (CU³): 1.028

DISTR CODE: D

ROUTING: 6900,6901

UNLESS OTHERWISE SPECIFIED

THIS DOCUMENT IS IN ACCORDANCE WITH ASME Y14.5M-1994 AS AMENDED BY THE GM GLOBAL DIMENSIONING AND TOLERANCING ADDENDUM - 1997. ALL GEOMETRIC TOLERANCES AND RELATED DATUMS APPLY RFS. RULE #1(PERFECT FORM AT MMC) DOES NOT APPLY WHEN RELATIONSHIP BETWEEN FEATURES IS ESTABLISHED BY ORIENTATION OR LOCATION TOLERANCES. SEPARATE POSITION CALLOUTS MAY BE GAGED SEPARATELY. REBARDLESS OF DATUM REFERENCE.

REFERENCE

DELPHI

DELPHI PACKARD ELECTRIC SYSTEMS
WARREN,OH

THIS DRAWING IS THE PROPERTY OF DELPHI CORPORATION. NO RIGHTS ARE GRANTED TO USE THIS DRAWING FOR ANY PURPOSE OTHER THAN THE FURNISHING OF SERVICES AND SUPPLIES TO DELPHI CORPORATION.

		DATE
DR		
APVD1	J. BARQUIN	21AP97
APVD2	E. BAEZ	14MY97
APVD3	A. HERMANN	22MY97
APVD4		
APVD5		

SUBSTANCES OF CONCERN AND RECYCLED CONTENT PER DELPHI 10949001

MATERIAL: M3592008 PA66 IM HS BLUE

DRAWING NAME: TPA MIC/P 100

DRAWING NUMBER: 12048345

SIZE	SCALE	FRAME NO	SHEET NO	STG	REV	N/P
A0	5:1	1 OF 1	1 OF 1	R	05	AD

Mouser Electronics

Authorized Distributor

Click to View Pricing, Inventory, Delivery & Lifecycle Information:

Delphi Connection Systems:

12048345-B