THIS DRAWING IS UNPUBLISHED. RELEASED FOR PUBLICATION -,- .
© COPYRIGHT - By - ALL RIGHTS RESERVED.

LOC	DIST
AF	50

REVISIONS

P	LTR	DESCRIPTION	DATE	DWN	APVD
	H	REVISED PER ECR-13-001204	24JUN13	KH	PD

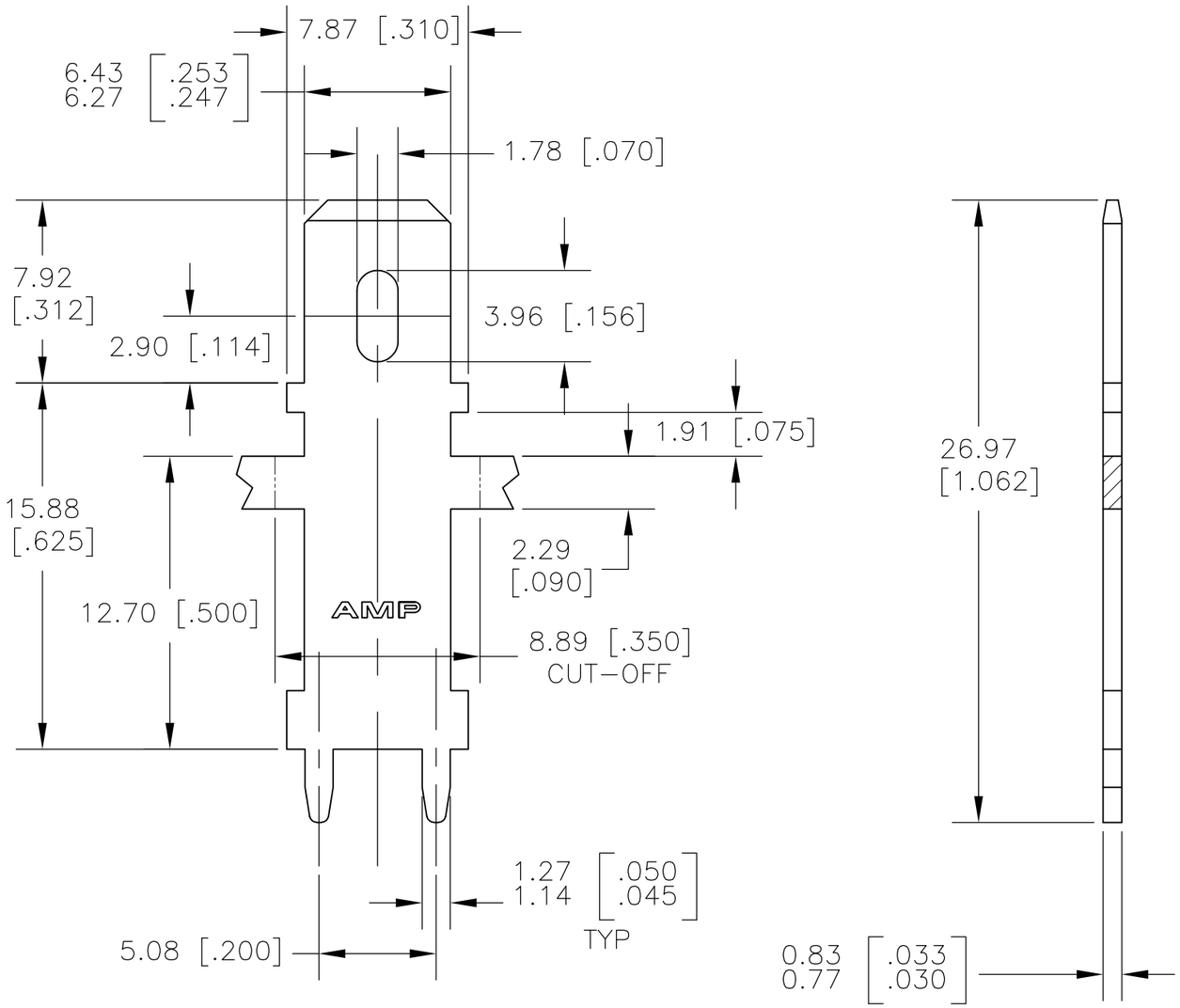

1 CONTINUOUS STRIP ON REELS

2 FEED IS 8.89±0.076 [.350±.003].

3 0.00381 [.000150] MIN TIN OVER 0.00127 [.000050] MIN NICKEL.

4 REELED WITH INTERLEAVING PAPER

5 PRELIMINARY – NOT FOR PRODUCTION

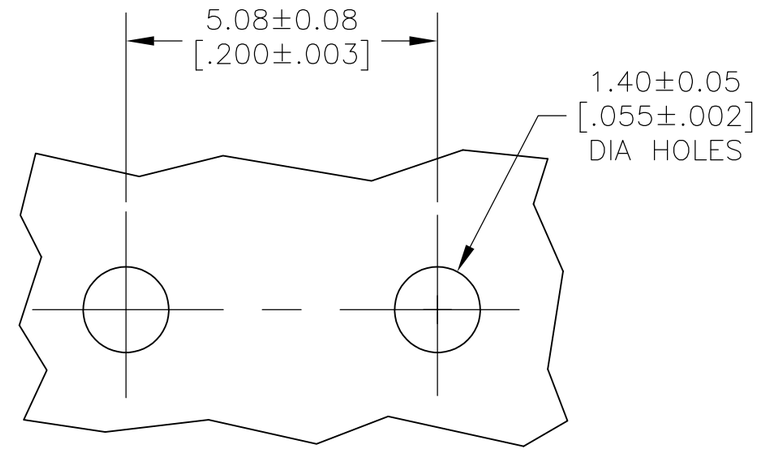

P.C.BOARD HOLES
SCALE 10:1

4	BRASS	5 63949-3
	BRASS	5 63949-2
	BRASS	63949-1
	MATERIAL	PART NO.

THIS DRAWING IS A CONTROLLED DOCUMENT.

DIMENSIONS: INCHES

TOLERANCES UNLESS OTHERWISE SPECIFIED:

0 PLC	± –
1 PLC	± –
2 PLC	± 0.25 [.010]
3 PLC	± –
4 PLC	± –
ANGLES	± –

MATERIAL: SEE TABLE

FINISH: 3

DWN	JR RUTH	05DEC00
CHK	MS FEHER	05DEC00
APVD	G PORTA	05DEC00
PRODUCT SPEC	—	
APPLICATION SPEC	114-2115	
WEIGHT	—	

CUSTOMER DRAWING

TE Connectivity

NAME: TAB, FASTON, P.C. BOARD, 6.35 [.250] SERIES

SIZE	CAGE CODE	DRAWING NO	RESTRICTED TO
A3	00779	C-63949	—

SCALE	SHEET	REV
4:1	1 OF 1	H