AML PUSHBUTTON AND INDICATOR SERIES

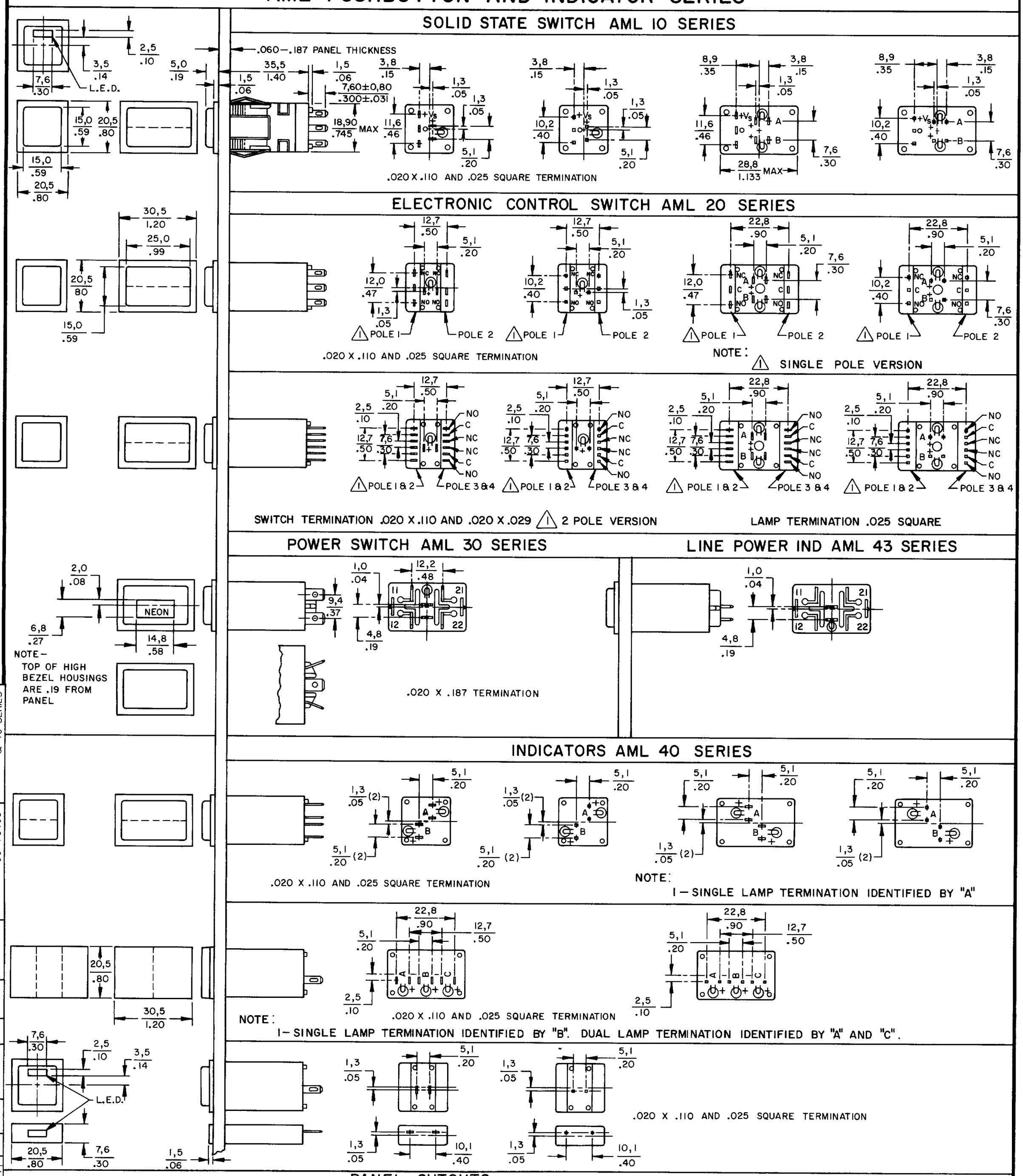

CATALOG LISTING	AML 10 20 30 40
PAGE 1 OF 1	SERIES CHART 1
RELEASE NO	CO–78498
REPLACES	AML 10, 20, 30 & 40 SERIES
ISSUE	6

REVISIONS		
A	C095297	GJW 8 JUL 99
B	201477	GJW 9 OCT 00
C	201566	CSL 20 OCT 00
D	201696	DLT 14 NOV 00
E	202971	CSL 30 APR 01

RASTER	DRAWN JAK	17 JUN 94
	CHECK JAF	11 JUL 94
	CHECK	
	CHECK	
	CHECK	

MASTER REDUCED

THIS DRAWING COVERS A PROPRIETARY ITEM AND IS THE PROPERTY OF MICRO SWITCH A DIVISION OF HONEYWELL. THIS DRAWING IS NOT TO BE COPIED OR USED WITHOUT THE APPROVAL OF MICRO SWITCH

MICRO SWITCH a Honeywell Division

FED. MFG CODE 91929

AML PUSHBUTTONS & INDICATORS

CATALOG LISTING: AML 10 20 30 40 SERIES CHART 1

SCALE FULL

DO NOT SCALE PRINT

TOLERANCES: APPLY TO DESIGN UNITS. CONVERSIONS ARE ONLY FOR REFERENCE. UNLESS NOTED, TOLERANCES ARE *

DESIGN UNITS: SI METRIC ☒ US CUSTOMARY ☐

THIRD ANGLE PROJECTION

WEIGHT