# WindCap™
# B25668-A6137-A375
# MKK690-D-20-11

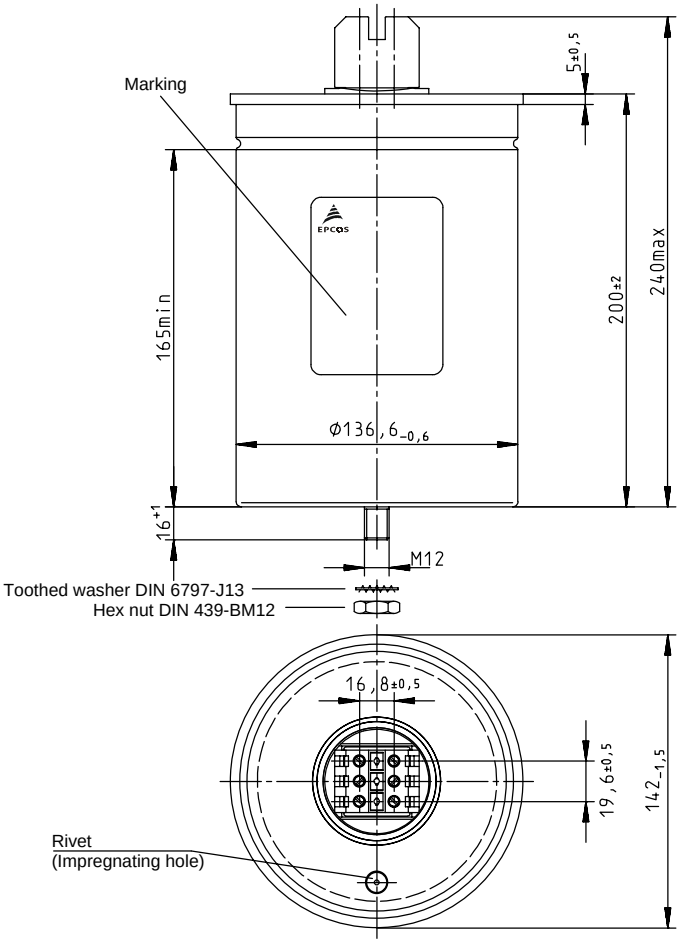


## Characteristics

| | | | |
|---|---|---|---|
| $C_N$ | Δ | 3x 46,5 µF ±5 % | |
| $U_N$ | | AC 690 V | |
| $f_N$ | | 50 Hz | 60 Hz |
| $Q_N$ | | 20,8 kvar | 24,96 kvar |
| $I_N$ | | 3x 17,5 A | 21 A |

$\tan\delta_0$ 0,2 W/kvar (dielectric)

## Maximum ratings

| | |
|---|---|
| $U_{max}$ | AC 760 V, 8 h daily |
| | AC 900 V, 1 min |
| $I_{max}$ | 3x 40 A ($\Theta_A$ = 40°C, $U_N$) |
| $I_s$ | 5300 A |
| $(du/dt)_{max}$ | 26 V/µs |
| $(du/dt)_s$ | 66 V/µs |

## Test data

| | |
|---|---|
| $U_{TT}$ | AC 1500 V, 10 s |
| $U_{TC}$ | AC 6000 V, 10 s |

$\tan\delta$ (50 Hz) ≤ 0,4 W/kvar (total)

## Climatic category -40/D

| | |
|---|---|
| $\Theta_{min}$ | –40 °C |
| $\Theta_{max}$ | +55 °C |
| Humidity | Max. relative Humidity ≤95 % |
| $\Theta_{stg}$ | –55 bis +70 °C |

## Life expectancy

$t_{LD}$ 130 000 h

## Design data

| | |
|---|---|
| Dimensions Ø x l | 142 x 200 mm (5,59 x 7,87 in) |
| Approx. weight | 2 kg (4,4 lb) |
| Impregnation | Gas |
| Fixing | Threaded bolt M12 |
| Mounting hole | 14 mm (0,55 in) |
| Max. torque | 10 Nm |
| Terminals | Isolated terminal, IP20 |
| Max. torque | 1,2 Nm |
| Terminal cross section | 16 mm² (5 AWG) |
| Creepage distance | 12,7 mm (0,50 in) |
| Clearance | 9,6 mm (0,38 in) |

Overpressure disconnector

Any mounting position possible

## Remarks

Natural cooling

The information in our data book / sheet describes the type of component and shall not be considered as assured characteristics.



Contact: EPCOS AG KO PM L, P.O. Box 80 17 09, 81617 Munich, Fax: 089 636-22748, Phone: 089 636-23817