THIS DRAWING IS UNPUBLISHED. RELEASED FOR PUBLICATION
(C) COPYRIGHT 19 BY AMP INCORPORATED. ALL RIGHTS RESERVED.

REVISIONS				
LTR	DESCRIPTION	DATE	DWN	APVD
B	REV PER EC 051C-0041-99	15-NOV-99	JCB	WCC

1. MATERIAL: HOUSING - NYLON, UL94V-0 (COLOR - NATURAL, COLOR OF PARTS MAY VARY). CONTACTS - 0.25 THK COPPER ALOY.
2. CONTACT FINISH: 0.003 MIN THK TIN-LEAD OVER 0.00127 MIN THK NICKEL OVER ENTIRE CONTACT.
3. CONTACT FINISH: 0.00076 MIN THK GOLD PLATE ON PIN MATING SURFACE, 0.003 MIN THK TIN-LEAD PLATE ON SOLDER TAIL, ALL OVER 0.00127 MIN THK NICKEL BASE PLATE.
4. SOLDER TAIL MEETS AMP SOLDERABILITY SPECIFICATION 109-11-2.
5. MATES WITH SIMILARLY PLATED AMP-DUAC™ POWER CONNECTOR RECEPTACLE HOUSINGS/SOCKET CONTACTS.
6. RIBS ON FOUR CORNERS OPTIONAL.
7. AMP LOGO AND MATERIAL ID MAY BE LOCATED ON EITER LONG SIDE OF PART.
8. SIZE, SHAPE OR STYLE OF THIS FEATURE MAY VARY.

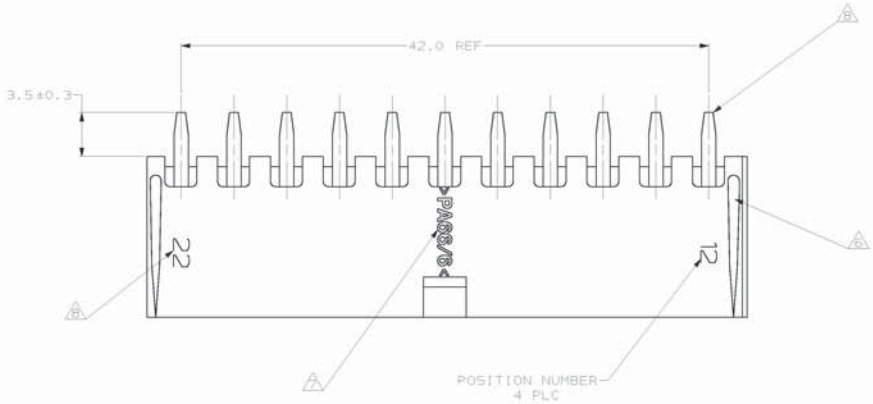

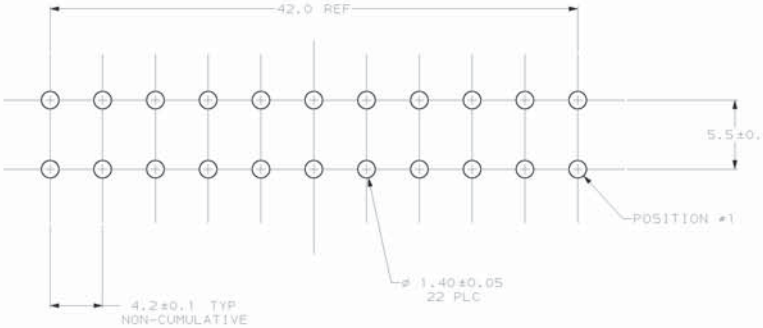

RECOMMENDED MOUNTING HOLE PATTERN
FOR 1.78 MAX THICK P.C. BOARD
COMPONENT SIDE SHOWN

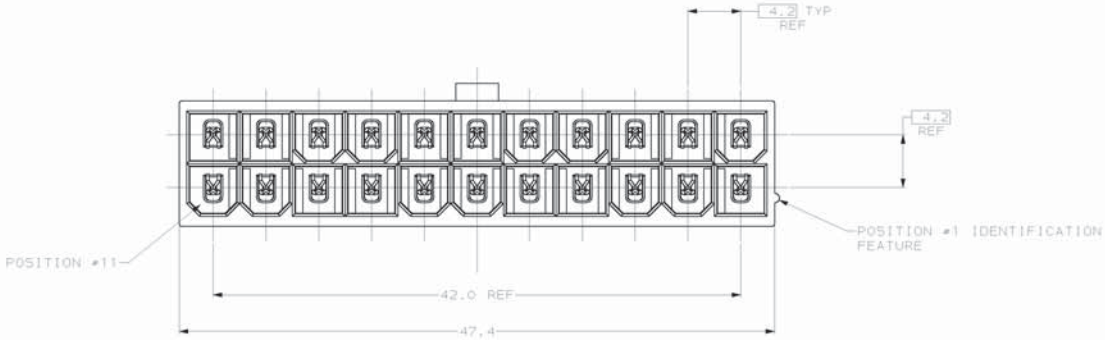

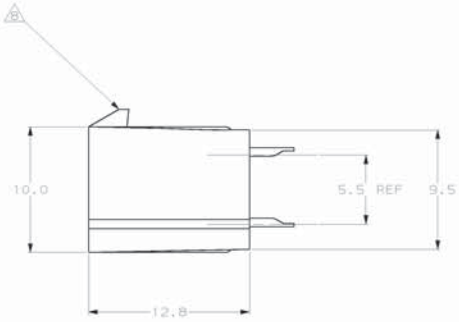

MATERIAL	FINISH	MATERIAL	COLOR	PART NO
CONTACT		HOUSING		
1	3	1	1	794493-2
1	2	1	1	794493-1

THIS DRAWING IS A CONTROLLED DOCUMENT.

DRAWN: D. VESTAL 6-11-98
CHK: D. SWING 6-11-98
APVD: C. CASH 6-11-98

PRODUCT SPEC: 108-1699
APPLICATION SPEC: --
WEIGHT: --

AMP — AMP Incorporated, Harrisburg, PA 17105-3608

ASSEMBLY, HEADER, VERTICAL, 22 POSITION, W/DRAIN HOLES, 94V-0, AMP-DUAC™ POWER CONNECTOR

SIZE A1 | CAGE CODE 00779 | DRAWING NO C-794493 | REVISED TO —

SCALE S:1 | SHEET 1 OF 1 | REV B

MATERIAL: SEE TABLE | FINISH: SEE TABLE

CUSTOMER DRAWING

METRIC