Alle Rechte vorbehalten/ *All rights reserved*

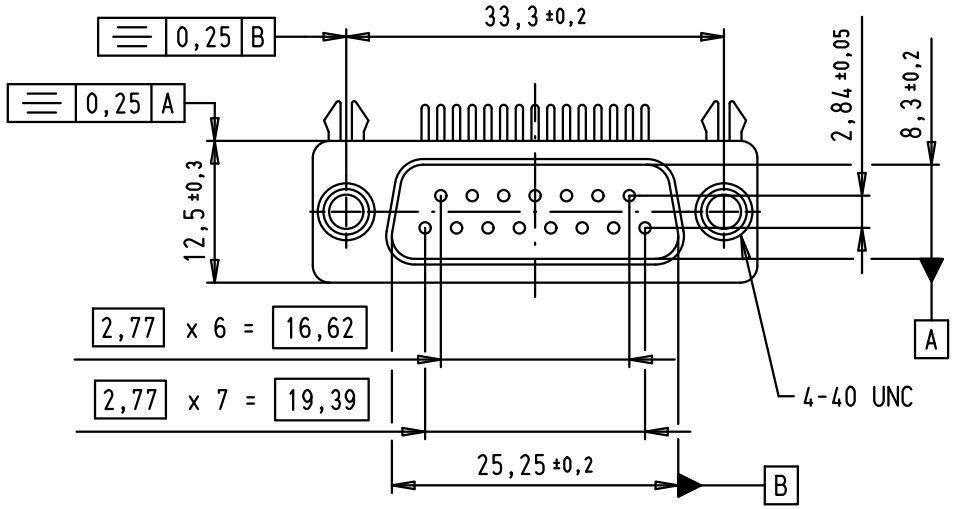

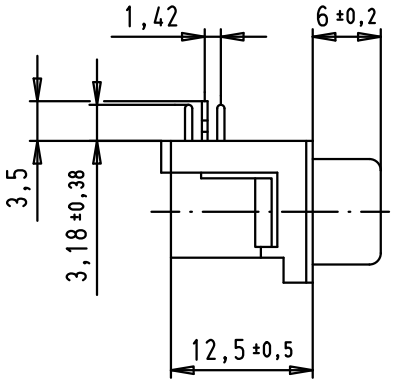

SPECIFICATIONS

FREQUENCY (MHz)	ATTENUATION (dB)
5	1
10	2
50	4
100	4,5
500	4,5
1000	4,5

Operating voltage	< 250 V AC
Working current	< 7,5 A
Insulation resistance	> 1GΩ
Contact resistance	< 15 mΩ
Dielectric withstanding voltage	500 V AC / minute

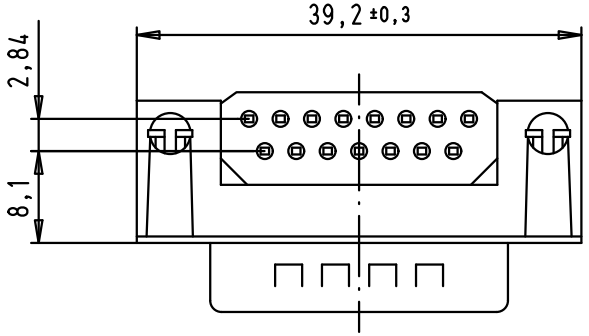

PCB layout, component side,
thickness between 1,6 and 3 mm

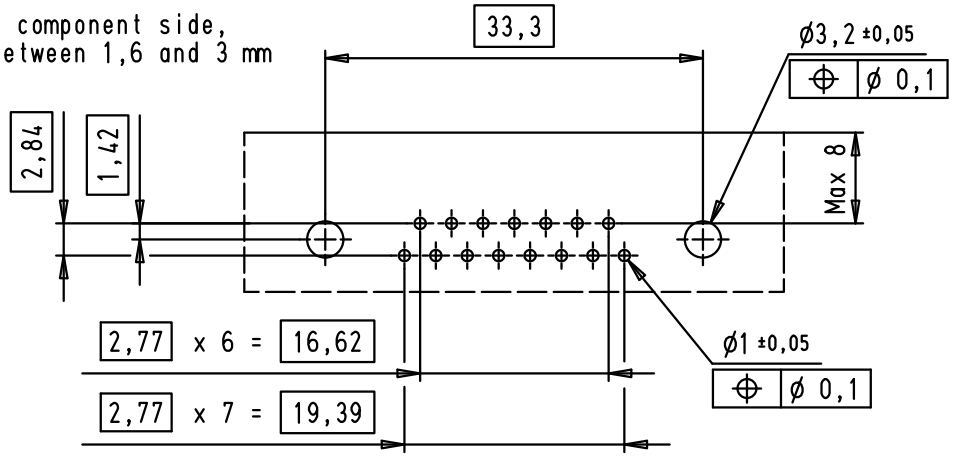

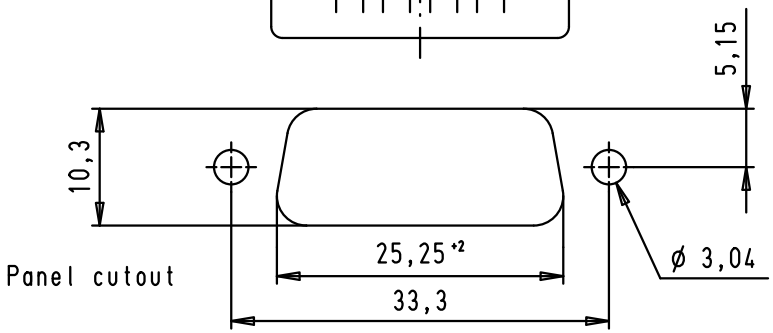

Panel cutout

09 64 223 7802	Au Flash
Part number	Performance level

Mod.	Dat.	Name
EC00362	02/07/09	PK

	Dat.	Name
Detail.	02/07/09	PK
Insp.		
Stand.		

All Dim. in mm
Orig. Size DIN A 4

HARTING EURL
F-95972 Paris

D-Sub, male, angled,
US footprint, 15 poles,
tin plated shell with dimples,
solder pins, ferrite filter

Maßstab/ *Scale* 1,5:1

TB 09 64 223 7802

Sub.

Blatt/ *Page* 1/1