THIS DRAWING IS UNPUBLISHED. RELEASED FOR PUBLICATION 2001
© COPYRIGHT 2001 BY TYCO ELECTRONICS CORPORATION. ALL RIGHTS RESERVED.

LOC	DIST
J	-

REVISIONS
変更

P	LTR	DESCRIPTION	DATE	DWN	APVD
	0	RELEASED (FJ00-1952-01)	03SEP2001	H.J	I.H
	A	REVISED(FJ00-2583-01)	05NOV2001	M.K	I.H

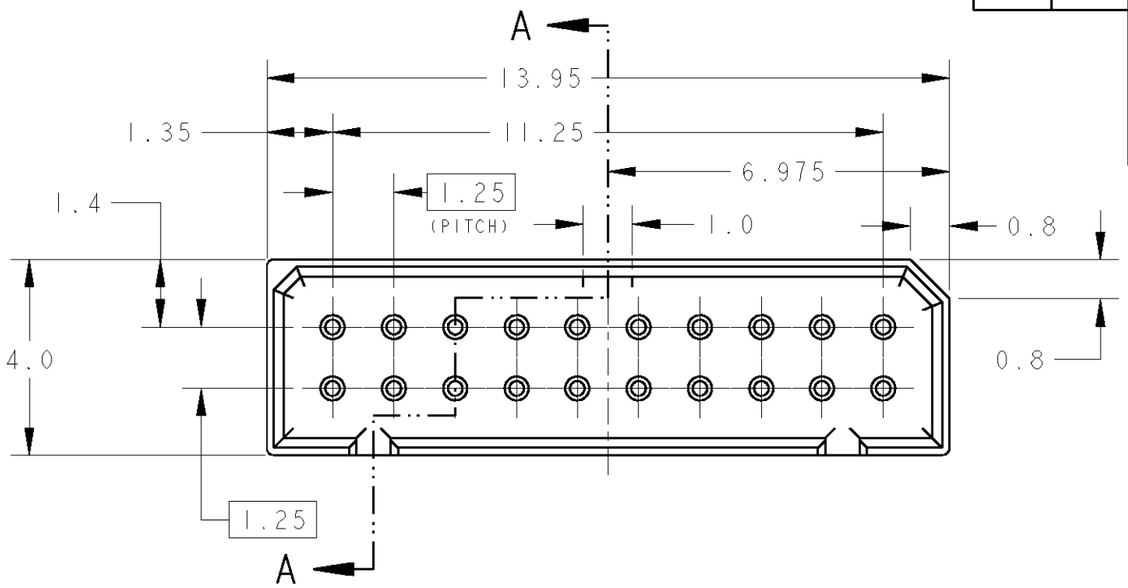

-1:AS SHOWN
本図

1.嵌合相手製品型番及び嵌合時寸法は表-1参照のこと。
MATING COUNTER PART NUMBER AND DIMENSIONS AFTER MATING:SEE TABLE1.

嵌合時寸法:幅(mm)×高さ(mm)
DIMENSIONS AFTER MATING:WIDE(mm)×HEIGHT(mm)

POST HDR ASS'Y / 嵌合相手側コネクタ MATING COUNTER CONN RECE HDR ASS'Y	DIP TYPE 1565388-1 ハウジング高さ寸法 HOUSING HEIGHT 3.95
1565387-1	4.0(幅)×5.0(高さ)
5-174905-0	4.6(幅)×6.9(高さ)

TABLE 1

2.製品規格:108-5246
PRODUCT SPEC

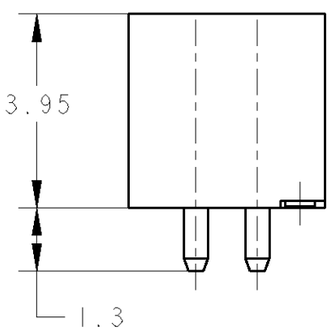

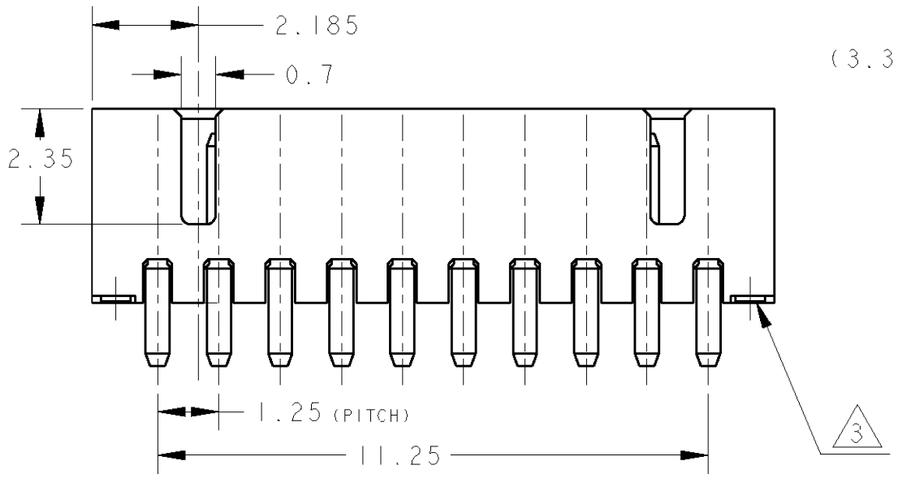

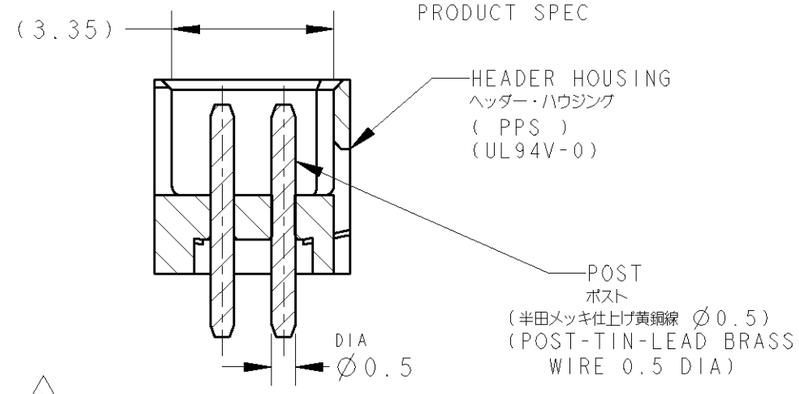

断面 A-A

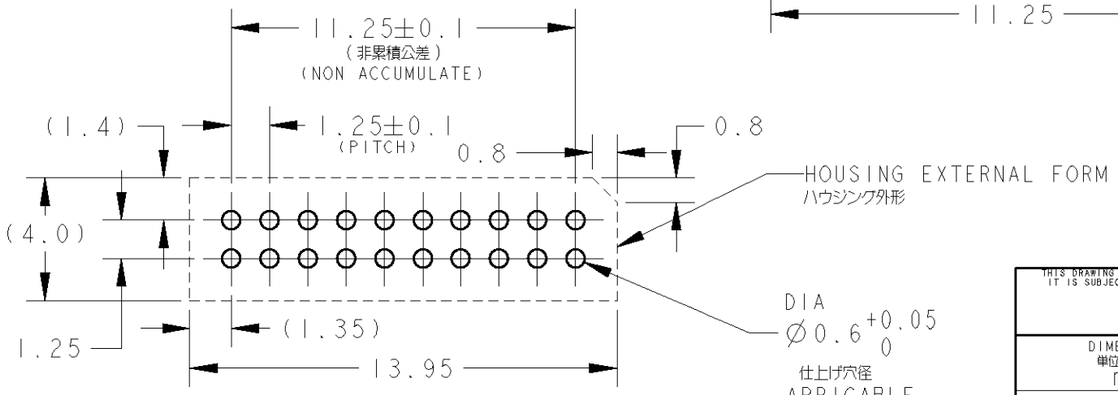

P.C.B MOUNTING LAYOUT
基板加工寸法

スケール 5:1

(適用基板厚:0.6~0.8mm)
(APPLICABLE P.C.B THK:0.6~0.8mm)

3 基板位置決め用ボス切断跡。
CUT MARK OF POSITIONER BOSS.
4.5-174643-0の同等品。
SAME AS 5-174643-0

THIS DRAWING IS A CONTROLLED DOCUMENT FOR TYCO ELECTRONICS CORPORATION. IT IS SUBJECT TO CHANGE AND THE CONTROLLING ENGINEERING ORGANIZATION SHOULD BE CONTACTED FOR THE LATEST REVISION.

DIMENSIONS: 単位: 純 mm

TOLERANCES UNLESS OTHERWISE SPECIFIED: ±0.25
0 PLC ±-
1 PLC ±
2 PLC ±
3 PLC ±-
4 PLC ±-
ANGLES ±3°

MATERIAL 材料 AS SHOWN 図中参照
FINISH 仕上 AS SHOWN 図中参照

DWN H.JO 03SEP2001
CHK M.KIMURA 03SEP2001
APVD I.HASEGAWA 03SEP2001
PRODUCT SPEC 製品規格 108-5246
APPLICATION SPEC 取付適用規格 -
WEIGHT 0.288 g

CUSTOMER DRAWING

AMP Tyco Electronics AMP K.K. Kawasaki, Japan

NAME 名称
1.25 F-P CONNECTOR (B-TO-B)
DOUBLE ROW POST HDR ASSY DIP TYPE
-

SIZE	CAGE CODE	DRAWING NO 番号	RESTRICTED TO
A3	00779	C-1565388	-

SCALE 尺度 8:1 SHEET 1 OF 1 REV A

AMP 1470-19 REV 31MAR2000

Pro/ENGINEER DRAWING