THIS DRAWING IS UNPUBLISHED. RELEASED FOR PUBLICATION 20
© COPYRIGHT 20 BY - ALL RIGHTS RESERVED.

REVISIONS

P	LTR	DESCRIPTION	DATE	DWN	APVD
	B1	REDRAWN IN CAD	29JUL2013	PKS	RRP

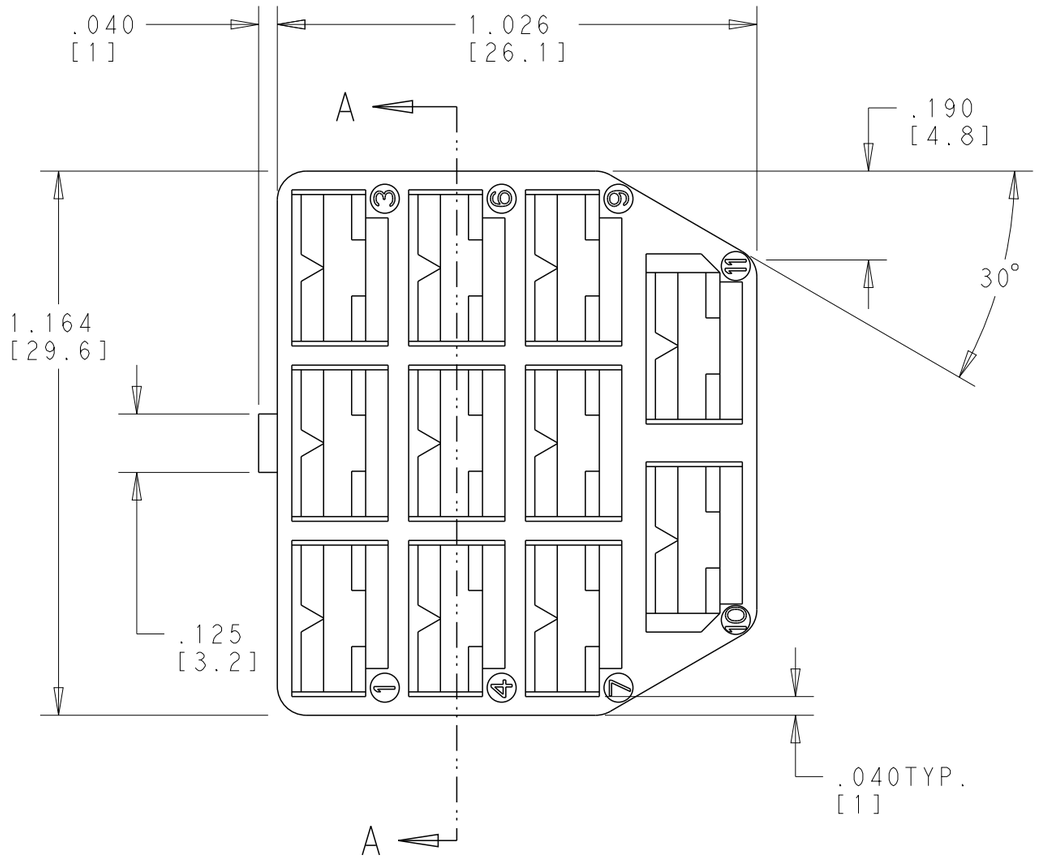

SECTION A-A

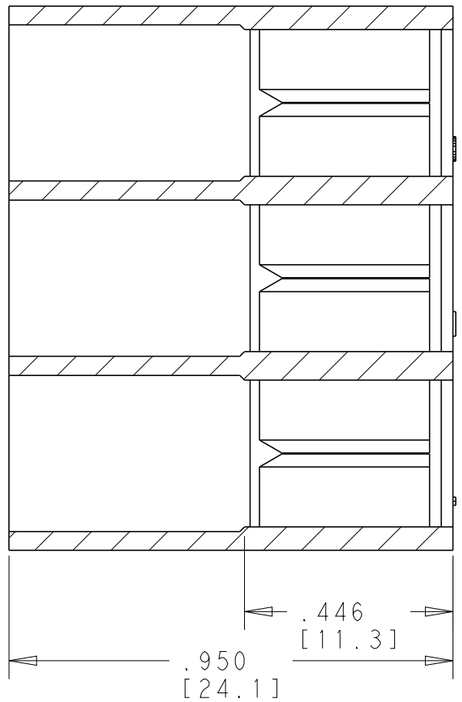

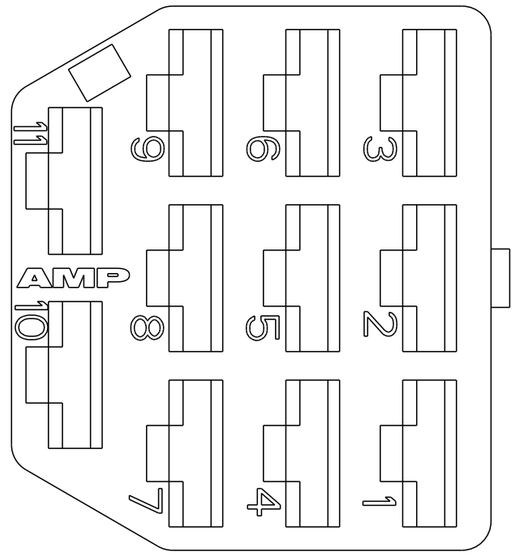

	151325-6	NYLON	YELLOW
	151325-5	NYLON	RED
	151325-4	NYLON	GREEN
	151325-3	NYLON	BLUE
OBSOLETE	~~151325-2~~	~~NYLON~~	~~BLACK~~
	151325-1	NYLON	NATURAL
	PART NO.	MATERIAL	COLOUR

THIS DRAWING IS A CONTROLLED DOCUMENT.

DIMENSIONS: inch

TOLERANCES UNLESS OTHERWISE SPECIFIED:
0 PLC ±-
1 PLC ±-
2 PLC ±.04
3 PLC ±.01
4 PLC ±.001
ANGLES ±1°

MATERIAL: SEE TABLE -

FINISH: SEE TABLE -

DWN SENTHIL 23JUL2013
CHK RAJENDRA 29JUL2013
APVD RAJENDRA 29JUL2013
PRODUCT SPEC 108-20020
APPLICATION SPEC 114-2025
WEIGHT -

Customer Drawing

TE Connectivity

NAME: 11 WAY FASTIN FASTON RECEPTACLE HOUSING -

SIZE	CAGE CODE	DRAWING NO	RESTRICTED TO
A3	-	C-151325	-

SCALE 3:1 SHEET 1 OF 1 REV B1

1470-19 (3/13)