THIS DRAWING IS UNPUBLISHED. RELEASED FOR PUBLICATION 20
© COPYRIGHT 20 BY - ALL RIGHTS RESERVED.

REVISIONS

P	LTR	DESCRIPTION	DATE	DWN	APVD
	A	INITIAL	22NOV2014	DW	CW
	A1	ECR-15-010519	20JUN2015	DW	CW
	A2	ECR-17-014183	27SEP2017	DW	CW

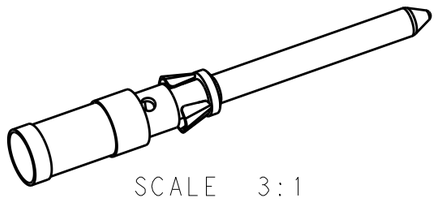

SCALE 3:1

1) Ød1=0.90, 1.10, 1.30, 1.45, 1.75

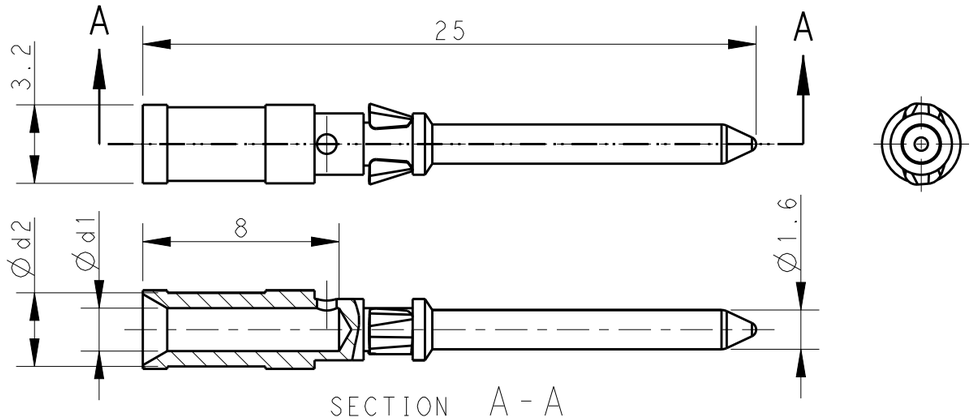

SECTION A-A

2) Ød1=2.25

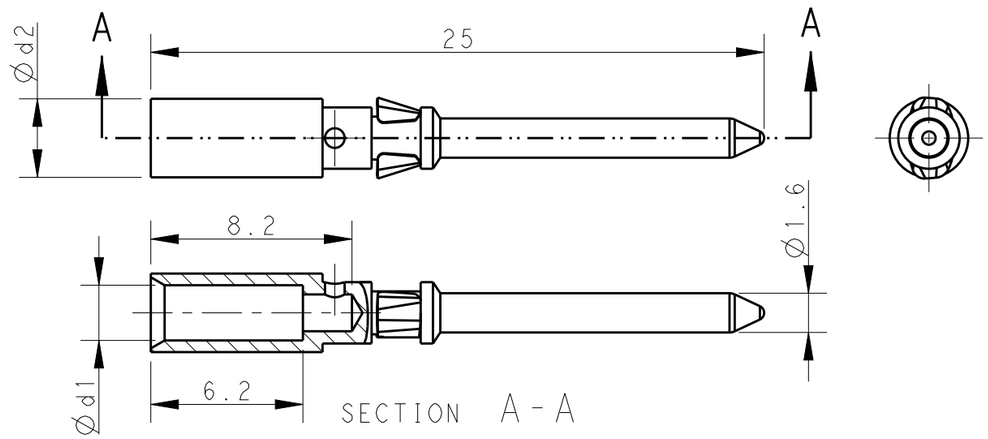

SECTION A-A

NOTES:
1. TECHNICAL CHARACTERISTICS:
   PIN CONTACT MATERIAL: BRASS
   SURFACE PLATING:
      SILVER PLATING: >= 2μm
      GOLD PLATING: >= 0.75μm
   CONTACT RESISTANCE: <=5 mΩ
   WIRE RANGE: 0.14-2.5 mm² (26-14 AWG)
   OPERATION TEMPERATURE: -40-+125°C

注释:
1. 技术参数:
   公针材料: 黄铜
   表面电镀:
      镀银: >= 2μm
      镀金: >= 0.75μm
   接触电阻: <=5 mΩ
   接线范围: 0.14-2.5 mm² (26-14 AWG)
   工作温度: -40-+125°C

SILVER PLATING 镀银			GOLD PLATING 镀金			Ød1	Ød2	WIRE GAUGE 线规		STRIPPING LENGTH 剥线长度(mm)
PART NUMBER 料号	PART DESCRIPTION 描述		PART NUMBER 料号	PART DESCRIPTION 描述				MM²	AWG	
T2020001002-000	CDM-0.3	CDM-0.3,SILVER PLATING DD公针 0.14-0.37mm2,镀银	T2020011002-000	DDM-0.3	DDM-0.3,GOLD PLATING DD公针 0.14-0.37mm2,镀金	0.90	2.55	0.14-0.37	26-22	8
T2020001005-000	CDM-0.5	CDM-0.5,SILVER PLATING DD公针 0.5mm2,镀银	T2020011005-000	DDM-0.5	DDM-0.5,GOLD PLATING DD公针 0.5mm2,镀金	1.10	2.60	0.5	20	
T2020001008-000	CDM-0.75	CDM-0.75,SILVER PLATING DD公针 0.75mm2,镀银	T2020011008-000	DDM-0.75	DDM-0.75,GOLD PLATING DD公针 0.75mm2,镀金	1.30	2.60	0.75	18	
T2020001010-000	CDM-1.0	CDM-1.0,SILVER PLATING DD公针 1.0mm2,镀银	T2020011010-000	DDM-1.0	DDM-1.0,GOLD PLATING DD公针 1.0mm2,镀金	1.45	2.60	1.0	18	
T2020001015-000	CDM-1.5	CDM-1.5,SILVER PLATING DD公针 1.5mm2,镀银	T2020011015-000	DDM-1.5	DDM-1.5,GOLD PLATING DD公针 1.5mm2,镀金	1.75	3.00	1.5	16	
T2020001025-000	CDM-2.5	CDM-2.5,SILVER PLATING DD公针 2.5mm2,镀银	T2020011025-000	DDM-2.5	DDM-2.5,GOLD PLATING DD公针 2.5mm2,镀金	2.25	3.20	2.5	14	6.2

THIS DRAWING IS A CONTROLLED DOCUMENT.

DIMENSIONS: mm

TOLERANCES UNLESS OTHERWISE SPECIFIED:
0 PLC ±-
1 PLC ±-
2 PLC ±-
3 PLC ±-
4 PLC ±-
ANGLES ±-

MATERIAL - -
FINISH - -

DWN 22NOV2014 David Wang
CHK 22NOV2014 Chris Wang
APVD 22NOV2014 Xiang Xu
PRODUCT SPEC 108-137042
APPLICATION SPEC 114-137042
WEIGHT -

TE Connectivity

NAME CDM/DDM HD/HDD PIN CONTACT

SIZE A3 | CAGE CODE 00779 | DRAWING NO C-T20200X10XX000 | RESTRICTED TO -

Customer Drawing | SCALE 4:1 | SHEET 1 OF 1 | REV A2

1470-19 (3/13)