THIS DRAWING IS UNPUBLISHED. RELEASED FOR PUBLICATION
© COPYRIGHT By – ALL RIGHTS RESERVED.

| LOC | DIST |
|---|---|
| CM | 00 |

REVISIONS

| P | LTR | DESCRIPTION | DATE | DWN | APVD |
|---|---|---|---|---|---|
| | V2 | REVISED PER ECR-15-006687 | 26OCT2015 | NK | NL |

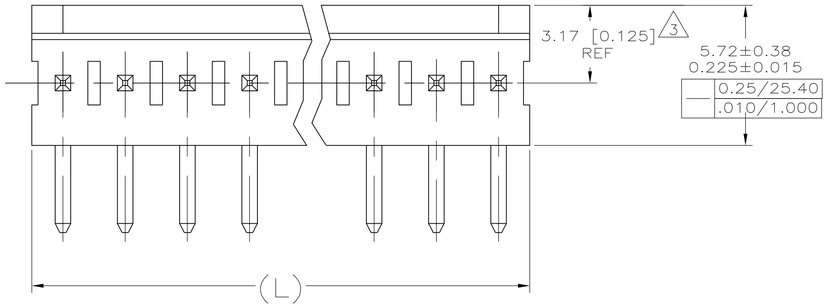


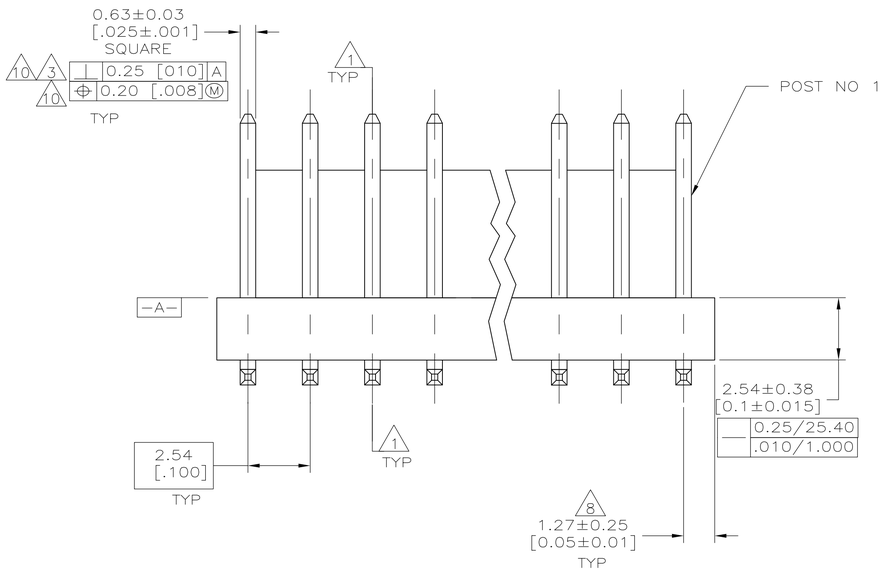


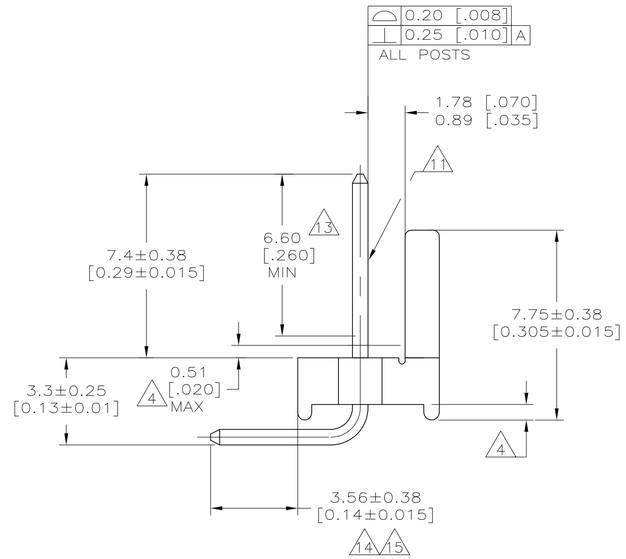


1. POST TO WITHSTAND 13 NEWTONS (3 LBS) MINIMUM AXIAL FORCE IN IN BOTH DIRECTIONS SHOWN WITHOUT DISLODGING.
2. TOLERANCES APPLY TO SOLDER SIDE OF BOARD.
3. MEASURED AT –A–
4. PLASTIC FLASH PERMITTED IN THIS AREA.
5. PARTS COMPLY WITH AMP SOLDERABILITY SPEC. NO. 109–11–2.
6. ONE HOLE MAY BE UNDERSIZED 0.81–0.89 [.032–.035] DIA. FOR ASSEMBLY RETENTION DURING WAVE SOLDERING.
7. MATERIAL: HEADER–THERMOPLASTIC POLYESTER 94V–0 (NATURAL)
   POST–COPPER ALLOY
   FINISH–USE PLATING NOTES 13 & 14 FOR –2 THRU –18 AND NOTES 13 & 15 FOR –32 THRU –58
8. COORDINATE DIMENSION APPLIES FROM CENTER OF ACTUAL FEATURE.
9. PLASTIC BURRS CAUSED BY CUT–OFF TOOLING ARE PERMITTED WITHIN THE MAXIMUM TOLERANCE ENVELOPE.
10. POSTS TO BE MEASURED WHEN STRIP IS HELD FLAT.
11. POST MUST WITHSTAND TWO 90° BENDS AGAINST EXTRUSION WITHOUT BREAKING.
12. DIMENSION SHOULD BE 2.79–4.06 [.110–.160] MIN WHEN MATING WITH A MTA–100 CONNECTOR ASSEMBLY OR 2.79–3.05 [.110–.120] WHEN MATING WITH A CST–100 CONNECTOR ASSEMBLY.
13. PLATING: GOLD PLATE AREA, 0.00076 [.000030] GOLD OR 0.00008 [.000003] MIN GOLD FLASH OVER 0.00068 [.000027] PALLADIUM NICKEL, PER TE CONNECTIVITY'S DISCRETION, ALL SIDES, OVER NICKEL UNDERPLATE, .00127 [.000050] MIN, ALL SIDES AND ENTIRE LENGTH OF POST.
14. PLATING: BRIGHT TIN/LEAD (93/7) PLATE AREA, 0.00381–0.00889 [.000150–.000350] THICK, ALL FOUR SIDES 3.56 [.140] MINIMUM.
15. PLATING: MATTE TIN PLATE AREA,0.00381–0.00889[.000150–.000350] THICK, ALL FOUR SIDES 3.56 [.140] MINIMUM.
16. OBSOLETE PARTS: OBSOLETE CIS STREAMLINING PER D.RENAUD/D.SINISI

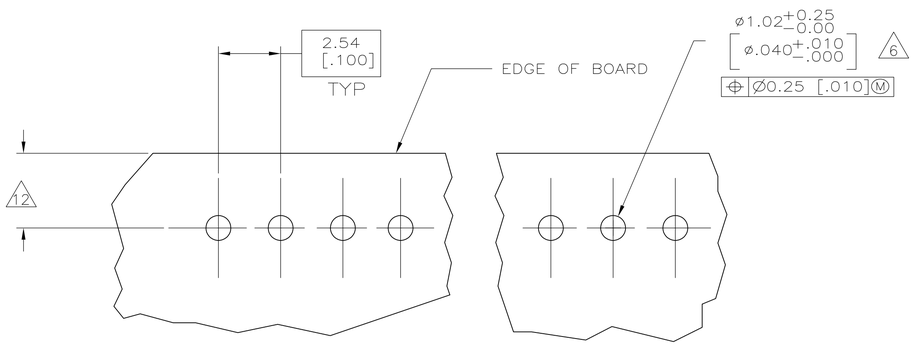


RECOMMENDED MOUNTING HOLE PATTERN FOR 1.60 [.063] THICK P.C. BOARD 2

| LEAD FREE | | | | CONTAINS LEAD | | | |
|---|---|---|---|---|---|---|---|
| 45.72 [1.800] | 18 | 4–641214–8 | | SUPERSEDED 16 | 45.72 [1.800] | 18 | ~~1–641214–8~~ |
| 43.18 [1.700] | 17 | 4–641214–7 | | | 43.18 [1.700] | 17 | ~~1–641214–7~~ |
| 40.64 [1.600] | 16 | 4–641214–6 | | | 40.64 [1.600] | 16 | ~~1–641214–6~~ |
| 38.10 [1.500] | 15 | 4–641214–5 | | OBSOLETE | 38.10 [1.500] | 15 | ~~1–641214–5~~ |
| 35.56 [1.400] | 14 | 4–641214–4 | | OBSOLETE | 35.56 [1.400] | 14 | ~~1–641214–4~~ |
| 33.02 [1.300] | 13 | 4–641214–3 | | SUPERSEDED 16 | 33.02 [1.300] | 13 | ~~1–641214–3~~ |
| 30.48 [1.200] | 12 | 4–641214–2 | | | 30.48 [1.200] | 12 | ~~1–641214–2~~ |
| 27.94 [1.100] | 11 | 4–641214–1 | | | 27.94 [1.100] | 11 | ~~1–641214–1~~ |
| 25.40 [1.000] | 10 | 4–641214–0 | | | 25.40 [1.000] | 10 | ~~1–641214–0~~ |
| 22.86 [.900] | 9 | 3–641214–9 | | | 22.86 [.900] | 9 | ~~641214–9~~ |
| 20.32 [.800] | 8 | 3–641214–8 | | | 20.32 [.800] | 8 | ~~641214–8~~ |
| 17.78 [.700] | 7 | 3–641214–7 | | OBSOLETE | 17.78 [.700] | 7 | ~~641214–7~~ |
| 15.24 [.600] | 6 | 3–641214–6 | | 16 SUPERSEDED | 15.24 [.600] | 6 | ~~641214–6~~ |
| 12.70 [.500] | 5 | 3–641214–5 | | OBSOLETE | 12.70 [.500] | 5 | ~~641214–5~~ |
| 10.16 [.400] | 4 | 3–641214–4 | | SUPERSEDED 16 | 10.16 [.400] | 4 | ~~641214–4~~ |
| 7.62 [.300] | 3 | 3–641214–3 | | | 7.62 [.300] | 3 | ~~641214–3~~ |
| 5.08 [.200] | 2 | 3–641214–2 | | OBSOLETE | 5.08 [.200] | 2 | ~~641214–2~~ |
| DIM (L) | NO.OF POSN | ASSEMBLY | | | DIM (L) | NO.OF POSN | ASSEMBLY |

THIS DRAWING IS A CONTROLLED DOCUMENT.

DIMENSIONS: mm [INCHES]

TOLERANCES UNLESS OTHERWISE SPECIFIED:
0 PLC ±
1 PLC ±
2 PLC ± 0.13 [.005]
3 PLC ±
4 PLC ±
ANGLES ±

MATERIAL 7 FINISH 7

DWN S. HOOVER 26–JAN–2005
CHK D. BOSSI 26–JAN–2005
APVD D. BOSSI 26–JAN–2005
PRODUCT SPEC
APPLICATION SPEC
WEIGHT

TE Connectivity

NAME: MTA–100 HEADER ASSEMBLY, POLARIZED, NOTCHED, .025 SQUARE RIGHT ANGLE POST, .000030 GOLD PLATED

| SIZE | CAGE CODE | DRAWING NO | RESTRICTED TO |
|---|---|---|---|
| A1 | 00779 | C–641214 | |

CUSTOMER DRAWING SCALE 8:1 SHEET 1 OF 1 REV V2

4805 (3/11)