PART NUMBER	ITEM ① BODY	ITEM ② CONTACT	ITEM ③ INSULATOR
131-8701-251	BRASS GOLD PL .00001 MIN OVER NICKEL PL .00005 MIN OVER COPPER PL .00005 MIN	BRASS GOLD PL .00003 MIN OVER NICKEL PL .00005 MIN OVER COPPER PL .00005 MIN	TEFLON
131-8701-256	BRASS NICKEL PL .0001 MIN OVER COPPER PL .00005 MIN	BRASS GOLD PL .00003 MIN OVER NICKEL PL .00005 MIN OVER COPPER PL .00005 MIN	TEFLON

DRAWING NO.				
C - 131-8701-251/260				
0	REVISIONS			
ENGINEERING RELEASE				
1	11-23-99	RH	KI	RR	ECN 46728

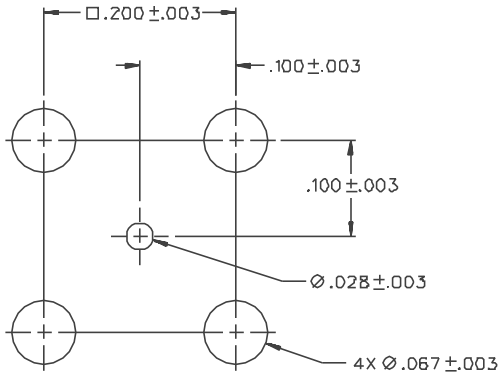

MOUNTING HOLE LAYOUT

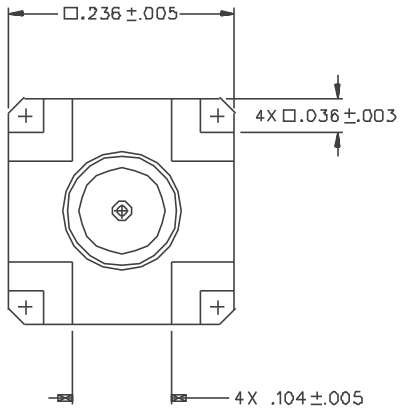

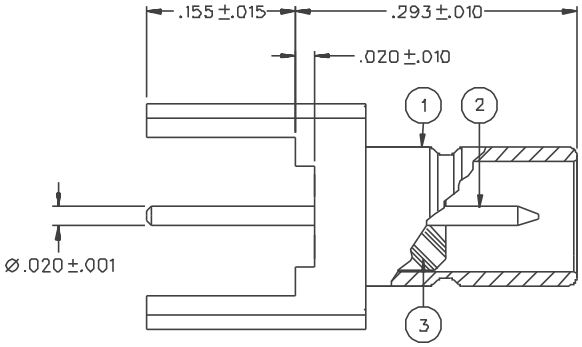

NOTES:

1. SPECIFICATIONS:

IMPEDANCE: 75 OHMS
FREQUENCY RANGE: 0-2 GHz
VSWR: NOT APPLICABLE
WORKING VOLTAGE: 335 VRMS MAX AT SEA LEVEL
DIELECTRIC WITHSTANDING VOLTAGE: 1000 VRMS MIN AT SEA LEVEL
INSULATION RESISTANCE: 1000 MEGOHM MIN
CONTACT RESISTANCE:
CENTER CONTACT - INITIAL 6 MILLIOHM MAX, AFTER ENVIRONMENTAL 8 MILLIOHM MAX
OUTER CONDUCTOR - GOLD PLATED INITIAL 1 MILLIOHM MAX, AFTER ENVIRONMENTAL 1.5 MILLIOHM MAX
NICKEL PLATED INITIAL 2.5 MILLIOHM MAX, AFTER ENVIRONMENTAL 3.5 MILLIOHM MAX

BRAID TO BODY - NOT APPLICABLE
CORONA LEVEL: NOT APPLICABLE
INSERTION LOSS: NOT APPLICABLE
RF LEAKAGE: NOT APPLICABLE
RF HIGH POTENTIAL WITHSTANDING VOLTAGE: 600 VRMS AT 4 AND 7 MHZ

MECHANICAL:

ENGAGE/DISENGAGE FORCE: INITIAL 14 LBS MAX, AFTER DURABILITY 14 LBS MAX ENGAGEMENT, 2 LB MIN DISENGAGEMENT
MATING TORQUE: NOT APPLICABLE
COUPLING PROOF TORQUE: NOT APPLICABLE
COUPLING NUT RETENTION: NOT APPLICABLE
CONTACT RETENTION: 4 LBS MIN AXIAL FORCE
CABLE ACCEPTABILITY: NOT APPLICABLE
CABLE HEX CRIMP SIZE: NOT APPLICABLE
CABLE RETENTION: NOT APPLICABLE
DURABILITY: 500 CYCLES MIN

ENVIRONMENTAL:

(MEETS OR EXCEEDS THE APPLICABLE PARAGRAPH OF MIL-C-39012)
THERMAL SHOCK: MIL-STD-202, METHOD 107, CONDITION B
OPERATING TEMPERATURE: -65 DEG C TO 165 DEG C
CORROSION: MIL-STD-202, METHOD 101, CONDITION B
SHOCK: MIL-STD-202, METHOD 213, CONDITION B
VIBRATION: MIL-STD-202, METHOD 204, CONDITION B

CUSTOMER DRAWING

THIS DRAWING TO BE INTERPRETED PER ANSI Y 14.5M - 1982

"μSTATION"

COMPANY CONFIDENTIAL

TOLERANCE UNLESS OTHERWISE SPECIFIED		DRAWN BY	DATE	JOHNSON	Cinch Connectivity Solutions 299 Johnson Ave. Ste. 100 Waseca, MN 56093 1-800-247-8256
DECIMALS .XX	mm	KAS	7-28-99		
.XXX +-.003		CHECKED BY KAS	DATE 11-24-99	TITLE JACK ASSEMBLY VERTICAL PC MOUNT Mini-75 SMB, .155 LEG	
MATL		APPROVED BY TAK	DATE 11-24-99		
FINISH		APPROVED BY RJB	DATE 12-14-99	CODE NO.	DRAWING NO. C - 131-8701-251/260
		RELEASE DATE		SCALE 10:1	U/M INCH SHEET 2 OF 2