THIS DRAWING IS UNPUBLISHED. RELEASED FOR PUBLICATION - ,N/A .
© COPYRIGHT N/A By - ALL RIGHTS RESERVED.

REVISIONS

P	LTR	DESCRIPTION	DATE	DWN	APVD
	R	REV PER ECO 17-011273	8-21-17	CT	DM

1. THIS RECEPTACLE WILL MATE WITH ANY 17C2, SIZE 3 PLUG IN AMPLIMITE SERIES.
2. MAXIMUM WIRE INSULATION TO BE USED WITH THIS RECEPTACLE IS ø.068.
3. THIS CONNECTOR ACCEPTS (2) POWER 8, OR COAX SOCKET CONTACTS IN POSITIONS A1 THRU A2, PURCHASED SEPARATELY.
4. THIS CONNECTOR ACCEPTS SIZE 20 SOCKET SIGNAL CONTACTS IN POSITIONS 1 THRU 15, PURCHASED SEPARATELY.

5. UL/CSA DESIGNATION STAMPED IN THIS AREA, OPTIONAL.
6. STEEL PER ASTM-A-109.
7. BRASS PER MIL-C-50 AND ASTM-B-36 UNS NO. C26000.
8. FINISH: CADMIUM PLATED PER QQ-P-416.
9. GOLD PLATED PER MIL-G-45204 TYPE II, GRADE C, CLASS 1 OVER COPPER PER MIL-C-14550, CLASS IV.
10. FINISH: TIN PER ASTM-B-545 .000400 MIN THK OVER COPPER PER AMS2418 .000050 MIN THK.
11. FINISH: ZINC PLATE PER ASTM-B-633 .000200-.000400 THK WITH SUPPLEMENTARY CHROMATE (Cr3+).

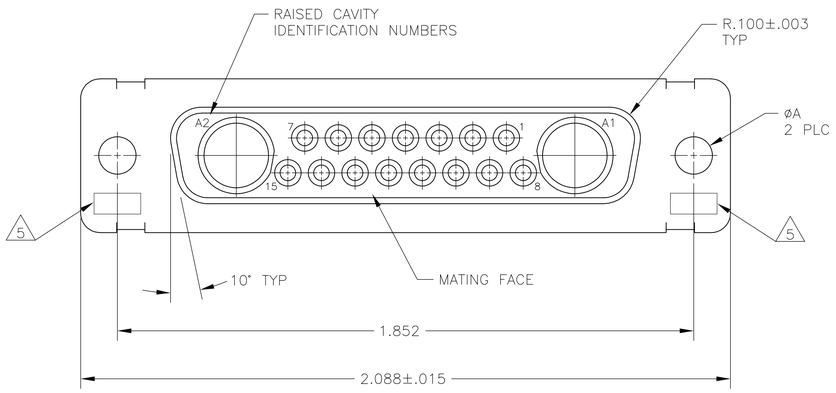

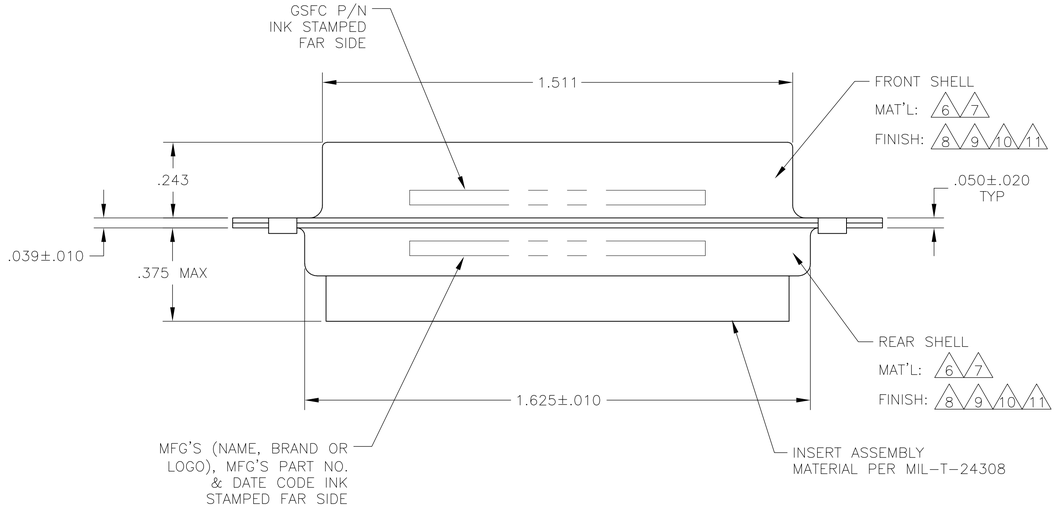

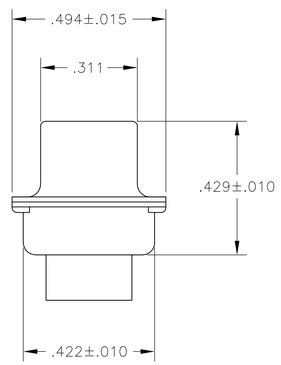

PRELIMINARY NOT RELEASED FOR PRODUCTION

REMARKS	ØA	GSFC P/N	PART NO.
6 11	.120	-	5-212510-1
6 10	.120	-	5-212510-4
6 10	.120	-	212510-5
6 10	.120	-	212510-4
7 9	.154	311P405-13S-B-15	212510-3
7 9	.120	311P405-13S-B-12	212510-2
6 8	.120	-	212510-1

THIS DRAWING IS A CONTROLLED DOCUMENT.

DIMENSIONS: INCHES

TOLERANCES UNLESS OTHERWISE SPECIFIED:
0 PLC ± -
1 PLC ± -
2 PLC ± -
3 PLC ± .005[0.13]
4 PLC ± -
ANGLES ± 0°30'

MATERIAL -
FINISH -

DWN C.C.THOMAS 26JAN88
CHK A.EMADI 02FEB88
APVD A.EMADI 02FEB88
PRODUCT SPEC —
APPLICATION SPEC —
WEIGHT 0.000000

TE Connectivity

NAME
RECEPTACLE ASSEMBLY
AMPLIMITE 17C2
SIZE 3, SERIES 109, COAX MIX

SIZE A1 | CAGE CODE 00779 | DRAWING NO C-212510 | RESTRICTED TO —

CUSTOMER DRAWING | SCALE 4:1 | SHEET 1 OF 1 | REV R

4805 (1/15)