THIS DRAWING IS UNPUBLISHED. RELEASED FOR PUBLICATION 20
© COPYRIGHT 20 BY TYCO ELECTRONICS CORPORATION. ALL RIGHTS RESERVED.

PART NUMBER	REV	FIRST USED	POWER UNIT	FEED TYPE
1852181-1	B	122500-1	LEADMAKER & BENCH MODEL G	POST FEED
1852181-2	B	565435-5	BENCH MODEL K	POST FEED
7-1852181-7	A	-	SPARE PARTS	-

1. RECOMMENDED SPARE PARTS
2. GREASE LIGHTLY
3. GUARD MUST BE IN PLACE WHEN OPERATING APPLICATOR IN A BENCH MACHINE

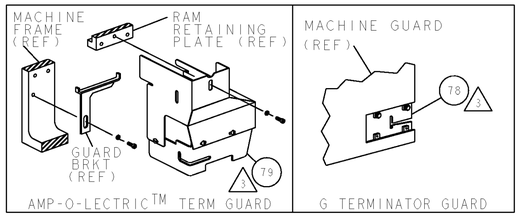

AMP-O-LECTRIC™ TERM GUARD | G TERMINATOR GUARD

TERMINAL NAME: 2.8mm FASTIN-FASTON RECEPTACLE					
-	969176	AMP TERMINAL - AMP CRIMP SPECS			
-	-				
-	-	PAD LTR	CRIMP HEIGHT		WIRE SIZE
-	-	A	.057±.002[1.44±0.05mm]		1.50mm2
-	-	B	.049±.002[1.25±0.05mm]		1.0mm2
-	-	C	.045±.002[1.15±0.05mm]		0.75mm2
-	-	D	-		-
-	-	CRIMP	SIZE	TYPE	RANGE
-	-				
-	-	WIRE	.080 [2.03mm]	F	0.75-1.50mm2
-	-	INSUL	.100 [2.54mm]	OV	-
WIRE STRIP LENGTH .142 -.157	TERM APPL SPEC 114-18022	FEED .661	APPL INSTRUCTIONS 408-8040	SET UP GAGE 458637-1	

LOC	DIST
A	66

REVISIONS

P	LTR	DESCRIPTION	DATE	DWN	APVD
	A	RELEASED	12JAN2006	ROW	GB
	B	ECR-08-001500	29JAN2008	MY	TE

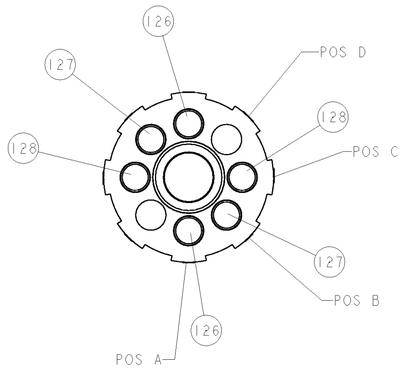

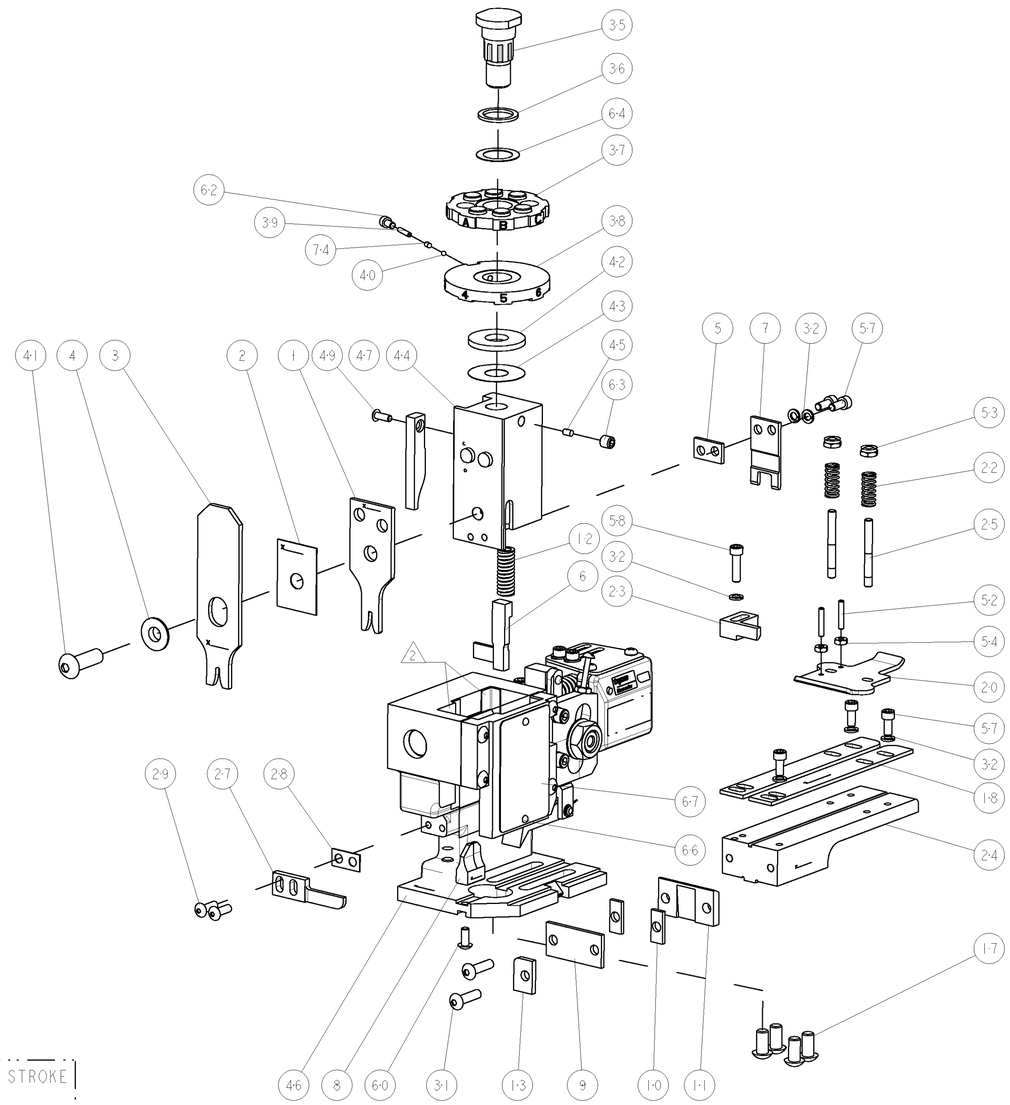

-	2	2	-	4-354779-4	PIN, WIRE DISC, .3210	128
-	2	2	-	3-354779-4	PIN, WIRE DISC, .3160	127
-	2	2	-	1-354779-8	PIN, WIRE DISC, .3080	126
-	REF	-	..	455749-1	GUARD WINDOW	79
-	-	REF	..	679532-1	INSERT, GUARD	78
-	1	1	-	690603-1	SPRING ASSIST AMP-O-MATOR APPLICATOR	74
-	1	1	-	217238-1	GENERAL INSTRUCTION PKG	72
-	1	1	-	4088039	EF APPL INST 408-8039	71
-	1	1	-	461264-1	PLATE, IDENTIFICATION	67
-	2	2	-	21017-2	SCREW, DRIVE	66
-	1	1	-	986950-1	WASHER, FLAT PRECISION	64
-	1	1	-	21009-2	SCR, SET, SELF LOCKING 1/4-20 X .250	63
-	1	1	-	23030-1	SCR, SKT HD CAP 6-32 x .25	62
-	1	1	-	22733-8	SCR, BHSC, SELF-LOCKING, 8-32 X .375	60
-	1	1	-	2-21000-8	SCR, SKT HD CAP 8-32 X .625	58
-	3	3	-	2-21000-6	SCR, SKT HD CAP 8-32 X .375	57
-	2	2	-	2-21000-6	SCR, SKT HD CAP 8-32 X .375	56
-	2	2	-	21018-4	NUT, HEX, REG 4-40	54
-	2	2	-	21022-2	NUT, LOCK, HEX, TORQUE, 8-32	53
-	2	2	-	2-21006-6	SCR, SET, CUP POINT 4-40 X .625	52
-	1	1	-	1-21002-7	SCR, BTN SKT HD CAP 6-32 X .375	49
-	1	-	..	690501-3	CAM, POST FEED, 1 1/8	48
-	-	1	..	690501-4	CAM, POST-FEED 1 5/8	47
-	1	1	-	458980-1	SUB ASSY, APPLICATOR FRAME	46
-	1	1	-	690191-1	PLUG,NYLON	45
-	1	1	-	455674-1	RAM	44
-	1	1	-	690125-1	SHIM SUB-ASSY	43
-	1	1	-	690124-1	WASHER, RAM (.115)	42
-	1	1	-	7-21002-9	SCR, BTN SKT HD CAP 5/16-24 X 1.00	41
-	1	1	-	23241-6	BALL, STEEL	40
-	1	1	-	690170-1	SPRING, COMPRESSION	39
-	1	1	-	690142-1	DISC, INSULATION	38
-	1	1	-	354777-1	WIRE DISC, ASSEMBLY	37
-	1	1	-	22480-5	SPRING, COMPRESSION	36
-	1	1	-	690212-1	POST, RAM	35
-	6	6	-	21024-4	WASHER, SPRG LOCK, REG NO 8	32
-	2	2	-	2-21002-9	SCR, BTN SKT HD CAP 10-32 X .750	31
-	2	2	-	2-21002-2	SCR, BTN SKT HD CAP 8-32 X .500	29
-	1	1	-	1-690451-7	SPACER, STRIPPER	28
-	1	1	-	240639-1	STRIPPER (MACHINING)	27
-	2	2	-	22354-8	STUD, THREADED	25
-	1	1	-	458803-8	PLATE, STRIP GUIDE, SLOTTED	24
-	1	1	-	240825-4	PLATE, STRIP HOLD DOWN	23
-	2	2	-	4-22281-1	SPRING, DRAG	22
-	1	1	-	454177-1	DRAG	20
-	2	2	-	454204-2	GUIDE, LOWER STRIP	18
-	4	4	-	3-21002-3	SCR, BTN SKT HD CAP 1/4-20 X .500	17
-	1	1	-	690481-9	SPACER, HOLD DOWN	13
-	1	1	-	23846-1	SPRING, DIE	12
-	1	1	-	240833-4	PLATE, REAR SHEAR	11
-	2	2	-	1-240645-5	SPACER, SHEAR PLATE	10
-	1	1	-	1-240642-2	PLATE, FRONT SHEAR	9
1	1	1	-	1633248-4	ANVIL, COMBINATION	8
-	1	1	-	3-240651-2	BLADE, SLUG	7
-	1	1	-	1-455892-2	HOLD DOWN, TERMINAL	6
-	1	1	-	3-240641-7	SPACER	5
-	1	1	-	3-238009-5	BLOCK, FL CRIMPER SPACER	4
1	1	1	-	4-854830-0	CRIMPER, INSULATION SPECIAL	3
-	1	1	-	455888-4	SPACER, CRIMPER	2
1	1	1	-	1-456405-7	CRIMPER, WIRE PREMIUM	1
-77	-2	-1	U/M	PART NO	DESCRIPTION	ITEM NO

POST-FEED 1 5/8 STROKE

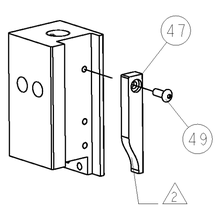

LEADMAKER

POST-FEED 1 1/8 STROKE

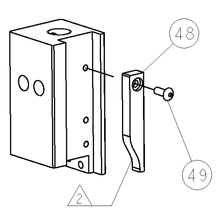

K TERMINATOR BENCH MACHINE

POST-FEED 1 5/8 STROKE

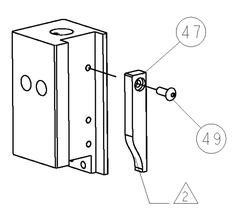

G TERMINATOR BENCH MACHINE

THIS DRAWING IS A CONTROLLED DOCUMENT FOR TYCO ELECTRONICS CORPORATION. IT IS SUBJECT TO CHANGE AND THE CONTROLLING ENGINEERING ORGANIZATION SHOULD BE CONTACTED FOR THE LATEST REVISION.

DIMENSIONS: INCHES

TOLERANCES UNLESS OTHERWISE SPECIFIED:
0 PLC ±-
1 PLC ±0.1
2 PLC ±0.01
3 PLC ±0.001
4 PLC ±0.0001
ANGLES ±-

MATERIAL - -
FINISH - -

DWN R.O.WILSON 09DEC05
CHK R.O.WILSON 13DEC05
APVD T.ELBIN 14DEC05

PRODUCT SPEC -
APPLICATION SPEC -
WEIGHT -

tyco Electronics
Tyco Electronics
Harrisburg, PA 17105-3608

NAME END FEED HDM APPLICATOR
-
-

SIZE A1 | CAGE CODE 00779 | DRAWING NO C-1852181 | RESTRICTED TO -

CUSTOMER DRAWING | SCALE 3:5 | SHEET 1 OF 1 | REV B

CUSTOMER VIEWABLE ASSEMBLY