PRODUCT NUMBER

10118528–6XX–06LF

PLATING
6 = 0.38µm Au/GXT FULL PLATED

RoHS COMPATIBLE PRODUCT
SEE NOTE 5

NB OF POSITIONS PER ROW

PIN STYLE	DIM"A"	DIM"B"
01	4.00	4.00
02	5.90	5.90
03	8.40	8.40
04	9.80	9.80
05	3.25	3.25

KIT NUMBER	MADE FROM	QTY
10118528–0003LF	10118528–603–06LF	144

PACKAGING NOTE 6

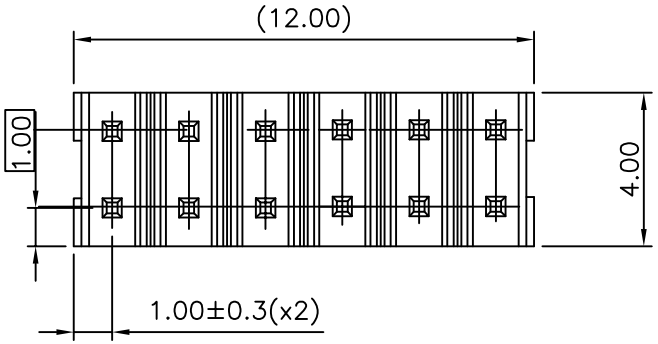

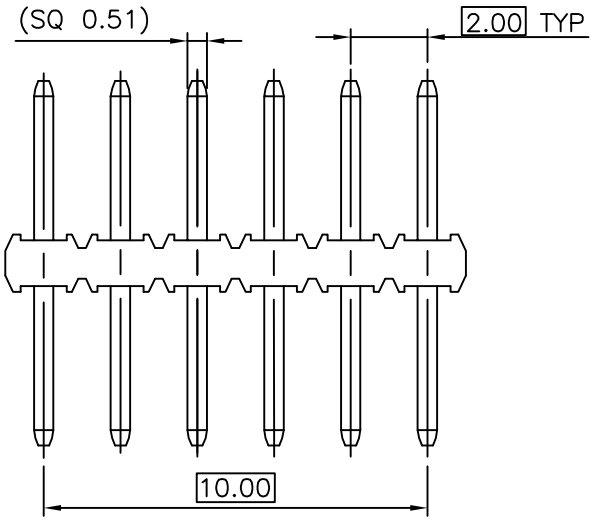

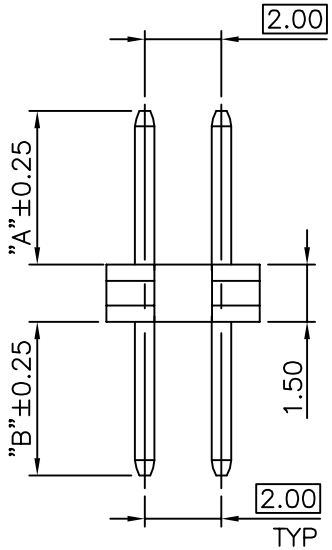

NOTES:

1. MATERIAL HOUSING: HIGH TEMP. THERMOPLASTIC UL 94V–0, COLOR BLACK
2. MATERIAL TERMINAL: COPPER ALLOY
3. 7N MIN. PIN RETENTION IN EITHER DIRECTION.
4. STANDARD PACKAGING IN PLASTIC BOX
5. RoHS COMPATIBLE PRODUCT SPECIFICATIONS
   - a – PLATING:
     - "LF" MEANS THE PRODUCT IS LEAD–FREE, 2µm MINIMUM MATTE TIN OVER 1.27µm MINIMUM NICKEL UNDERPLATE.
   - b – MANUFACTURING PROCESS COMPATIBILITY
     - THE HOUSING WILL WITHSTAND EXPOSURE TO 260°C ±5°C SOLDER BATH TEMPERATURE FOR 5 SECONDS IN A WAVE SOLDER APPLICATION WITH A 1.6mm MIN THICK CIRCUIT BOARD.
     - COMPATIBLE TO REFLOW PROCESS 260°C MAX FOR 30 SECONDES
   - c – LABELLING:
     - MEETS PACKAGING SPECS AS PER GS–14–920
   - d – LEGAL STATEMENT : SEE GS–47–0004
6. PACKAGING IN PLASTIC BOX : 144PCS

ltr	ecn no	dr	date
A	F11–0098	LMU	11.09.13
B	F12–0078	JCO	12.06.26
C	F12–0085	JCO	12.12.07
D	B–19190	LMU	14.10.24

mat'l. code

surface ISO 1302

tolerance ISO 406 ISO 1101

projection

tolerances unless otherwise specified

angles | linear | .X ±0.3 | .XX ±0.13 | .XXX ±0.05

mm

scale 1:1

dr	L.MULIN	06.06.11
engr	J.COMPAGNON	06.06.11
chr		
appd	JM.C	06.06.11

sheet index | revision sheet

product family: MINITEK

title: UNSH HEADER 2.00 mm VERTICAL TMT

dwg no: 10118528 | sheet 1 of 1 | size A3

type: CUSTOMER Drawing

FCIconnect.com
Copyright FCI
form: A3
Printed: Nov 13, 2014
STATUS:Released
PDS: Rev :D