VIEW ON MATING SIDE

	32	31	31	29	28	27	26	25	24	23	22	21	20	19	18	17	16	15	14	13	12	11	10	9	8	7	6	5	4	3	2	1
B	B	B	B	B	B	B	B	B	B	B	B	B	B	B	B	B	B	B	B	B	B	B	B	B	B	B	B	B	B	B	B	B
A	A	A	A	A	A	A	A	A	A	A	A	A	A	A	A	A	A	A	A	A	A	A	A	A	A	A	A	A	A	A	A	A

A = 32 CONTACTS L=2,8
B = 32 CONTACTS L=2,8

S = 64 TOTAL NUMBER OF CONTACTS

Marking	Standard
Performance level	G2/0 = Contact area level2 / Termination tin
Flux proof	no
Fixing clip	yes
Dimensions	SDA-85050-0001 sht.1
Technical Data	PS-85052-0001

B	G2/0	b1-32
A	G2/0	a1-32
Contact symbol	Perform. level	Contact position number

LTR	REVISIONS	FOR PREVIOUS REVISIONS SEE MRI LIST
A	ECN 2469 first release	

UNLESS OTHERWISE SPECIFIED TOLERANCES: ANGULAR ±2°

	INCH	METRIC
3 PLACE	± .	±
2 PLACE	± .	±
1 PLACE	± .	±

DRAFT WHERE APPLICABLE MUST REMAIN WITHIN DIMENSIONS

DESIGN DIMENSION ☐ MM ☐ IN.

EQUIVALENT DIMENSION ☐ MM ☐ IN.

IF TWO DIMENSIONS ARE SHOWN THE UPPER IS THE DESIGN DIMENSION, LOWER IS SECONDARY

DRWG BY	KN	SIGN
CHK'D BY	Ca	SIGN
APP'D BY	JB	SIGN
SCALE		

REVISE ONLY ON CAD SYSTEM | SH. | REV.

CADCAM PROJECT NAME s8505001 s11

THIS DRAWING CONTAINS INFORMATION THAT IS PROPRIETARY TO MOLEX INC. & SHOULD NOT BE USED WITHOUT WRITTEN PERMISSION

TITLE

64 pos. female connector acc. DIN 41612 style Q contacts arrangement

MOLEX EUROPE

SHEET NO. 1 OF 1

DATE 97/04/22

PART NO. 85050-0115

DWG NO. SD-85050-0115

SIZE A

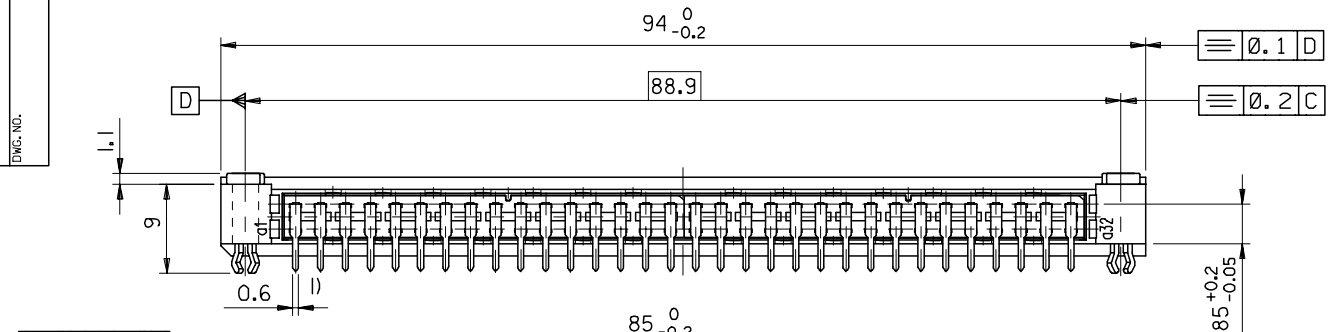

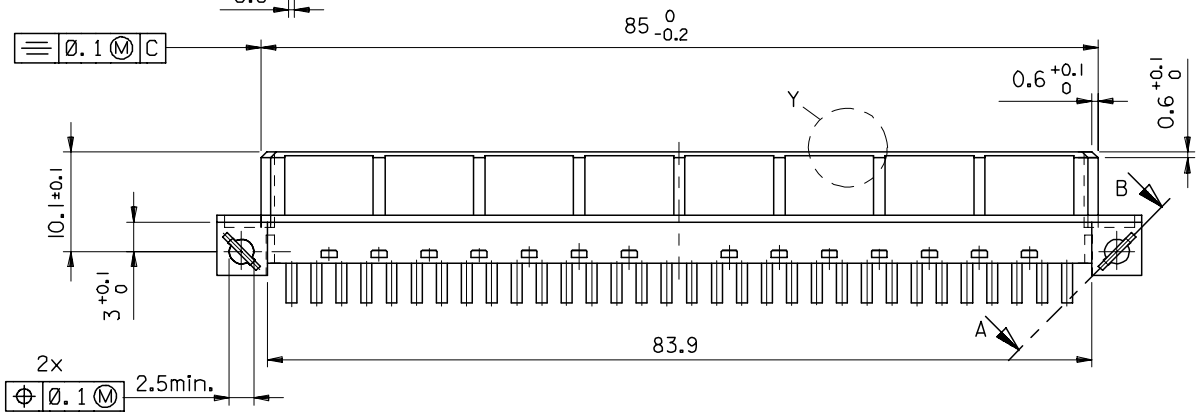

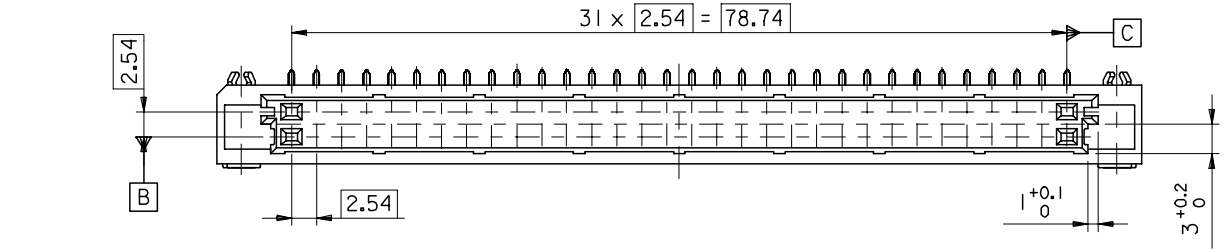

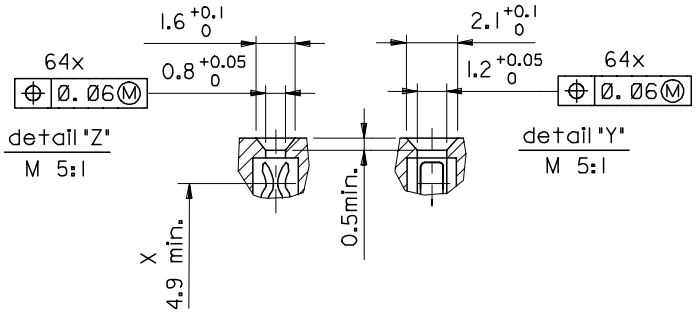

PCB LAYOUT: COMPONENT SIDE

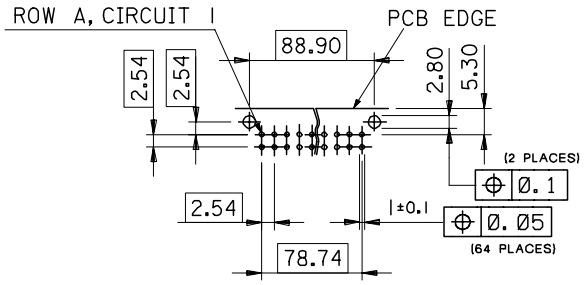

1) tails to fit in PC-board layout

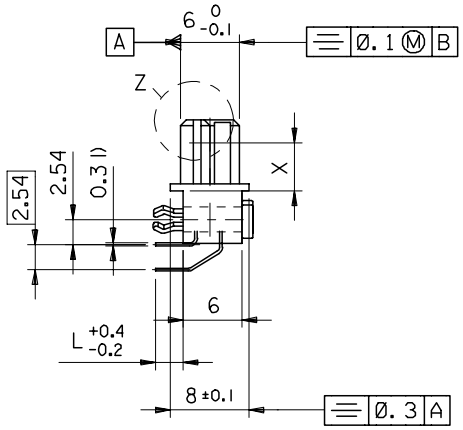

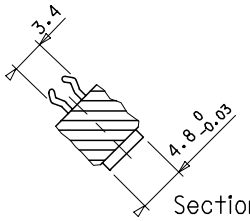

Section A - B

12006-0451 2006/02/02	REVISIONS	FIRST ANGLE PROJECTION	DRWG BY KN	SIGN	REVISE ONLY ON CAD SYSTEM	SH.	REV.
		UNLESS OTHERWISE SPECIFIED TOLERANCES: ANGULAR ±2° INCH / METRIC: 3 PLACE ± / ±; 2 PLACE ± / ±; 1 PLACE ± / ±	CHK'D BY Ca	SIGN	CADCAM PROJECT NAME 85050000 s11		
		DRAFT WHERE APPLICABLE MUST REMAIN WITHIN DIMENSIONS	APP'D BY JB	SIGN	THIS DRAWING CONTAINS INFORMATION THAT IS PROPRIETARY TO MOLEX INC. & SHOULD NOT BE USED WITHOUT WRITTEN PERMISSION		
		DESIGN DIMENSION ☒ MM ☐ IN.			TITLE 64 pos. female connector DIN 41612 style Q + clip Dimensions		
B2	LTR	EQUIVALENT DIMENSION ☐ MM ☐ IN.	SCALE 2:1		molex MOLEX EUROPE	SHEET NO. 1 OF 1	DATE 96/10/22
	FOR PREVIOUS REVISIONS SEE MRI LIST	IF TWO DIMENSIONS ARE SHOWN, THE UPPER IS THE DESIGN DIMENSION, LOWER IS SECONDARY			PART NO. SEE CHART	DWG NO. SDA-85050-0001	SIZE B

7132-1283