CFPX-180

SURFACE MOUNT
QUARTZ CRYSTALS

ISSUE 3; 8 AUG 2008

RoHS
2002/95/EC

Delivery Options

- Please contact our sales office for current leadtimes

Holder Style

- CFPX-180 surface mount crystals are encapsulated in a ceramic package with a seam sealed metal lid

General Specifications

- Load Capacitance (C_L): 16pF standard
- Drive Level: 100µW max
- Ageing: ±5ppm max per year @ 25°C
- Co: 7pF max

Packaging

- CFPX-180 surface mount crystals are available packaged loose as bulk pack or on tape and reel

Standard Frequency Tolerances and Stability

- ±10ppm to ±50ppm

Operating Temperature Range

- –10 to 60°C

Storage Temperature Range

- –30 to 85°C

Environmental

- Shock: MIL-STD-202F, Method 213B (1/2 sine, 1000G, 0.5ms)
- Vibration: MIL-STD-202F, Method 204D, Test Condition D 20G (freq range 10-2000Hz, 4 hrs in X, Y & Z axes, total 12hrs)

Marking includes

- Frequency

Minimum Order Information Required

- Frequency + Holder + Frequency Tolerance @ 25°C + Frequency Stability + Operating Temperature Range + Circuit Condition + Overtone Order

Outline in mm

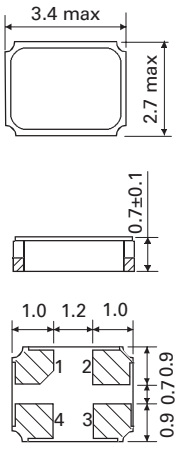

Pad Connections
1. Crystal
2. N/C
3. Crystal
4. N/C

Solder pad layout

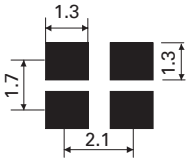

Tel: +44 (0)1460 270200

Fax: +44 (0)1460 72578

Website: www.iqdfrequencyproducts.com

e-mail: info@iqdfrequencyproducts.com

Electrical Specification - maximum limiting values

Frequency Range	Frequency Tolerance @ 25°C ±2°C	Operating Temperature Range	Frequency Stability Available Over Operating Temperature Range		ESR max.	Vibration Mode
			Minimum	Maximum		
13.0 to <16.0MHz	±10ppm to ±50ppm	-10 to 60°C	±10ppm	±50ppm	150Ω	Fundamental AT Cut
16.0 to 50.0MHz					100Ω	

Note. For any other frequencies / specification combinations, please contact our sales office.

Outline in mm - Tape

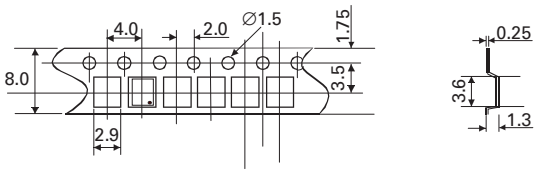

Outline in mm - Reel

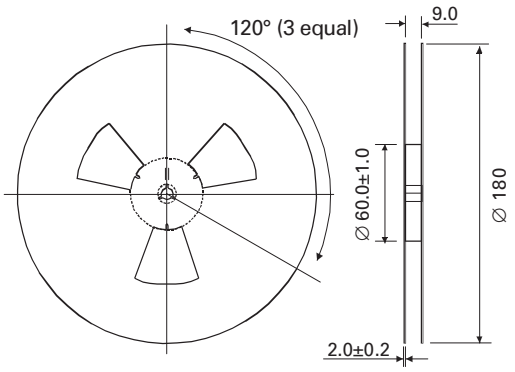

Tel: +44 (0)1460 270200
Fax: +44 (0)1460 72578
Website: www.iqdfrequencyproducts.com
e-mail: info@iqdfrequencyproducts.com