THIS DRAWING IS UNPUBLISHED. RELEASED FOR PUBLICATION –,– .
© COPYRIGHT – By – ALL RIGHTS RESERVED.

LOC	DIST
J	—

REVISIONS

P	LTR	DESCRIPTION	DATE	DWN	APVD
	K2	REVISED ECR-15-007795	29MAY2015	TS	KB

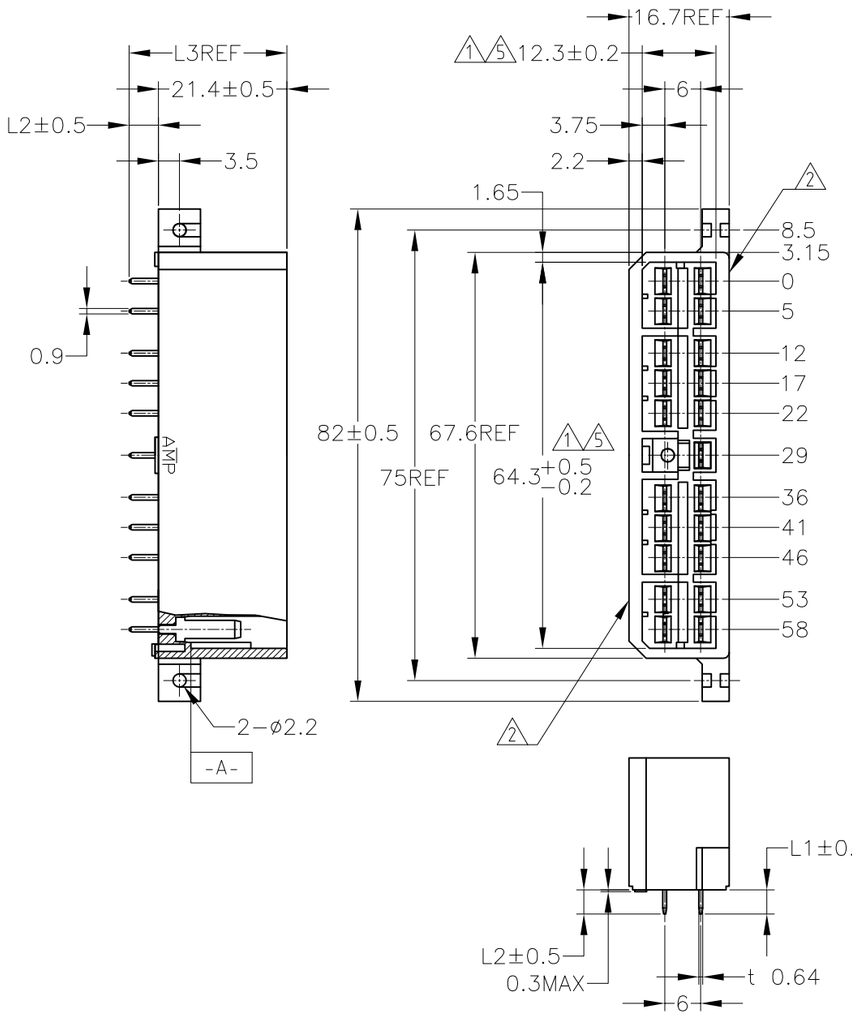

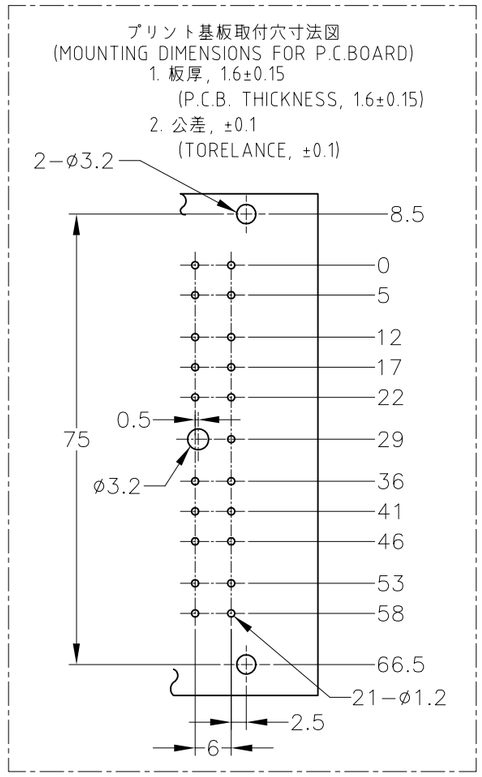

OBSOLETE	L3	L2	L1	SOLDERING SIDE 半田付け部	CONTACT SIDE 接触部側	COLOR 色	PART NUMBER 製品型番
	26.3	4.9	4.9	SELECTIVE-TIN (MATTE)	SELECTIVE GOLD	NATURAL	5171457-5
	32.1	10.7	10.7	PRE-TIN		NATURAL	6-171457-1
	47.5	26.1	14.1	PRE-TIN		NATURAL	5-171457-1
	30.3	8.9	8.9	PRE-TIN		NATURAL	4-171457-1
OBSOLETE	26.3	4.9	4.9	TIN-LEAD	SELECTIVE GOLD	GREEN	1-171457-4
	26.3	4.9	4.9	TIN-LEAD	SELECTIVE GOLD	NATURAL	1-171457-1
OBSOLETE	26.3	4.9	4.9	TIN-LEAD	SELECTIVE GOLD	GREEN	171457-8
OBSOLETE	26.3	4.9	4.9	TIN-LEAD	SELECTIVE GOLD	BROWN	171457-7
OBSOLETE	26.3	4.9	4.9	TIN-LEAD	SELECTIVE GOLD	BLACK	171457-6
	26.3	4.9	4.9	TIN-LEAD	SELECTIVE GOLD	NATURAL	171457-5
	26.3	4.9	4.9	PRE-TIN		GREEN	171457-4
OBSOLETE	26.3	4.9	4.9	PRE-TIN		BROWN	171457-3
OBSOLETE	26.3	4.9	4.9	PRE-TIN		BLACK	171457-2
	26.3	4.9	4.9	PRE-TIN		NATURAL	171457-1
				CONTACT FINISH コンタクト仕上			

1. 相手ハウジングと所定の機能を満たして嵌合できること。
2. フードの反りは0.2以内。
3. 推奨取付ねじ：JIS B 1115 又は、1122 タッピンねじ
なべ1種, 呼び径3を使用し、締め付け後半田付けする。
4. 適用製品規格：108-5093
5. -A- 面より2mmの範囲で測定。
6. 相手ハウジングとの嵌合力は、29.4N以下。
但し、リセプタクル コンタクトは含まない。

1. IN COUPLING WITH THE PLUG HOUSING MATING SATISFIES FUNCTION.
2. WARPAGE 0.2 MAX.
3. RECOMMENDED MOUNTING SCREW: 3mm DIA, PAN HEAD, CLASS 1 TAPPING SCREW SPECIFIED IN JIS B1115, B1122
4. PRODUCT SPECIFICATION: 108-5093
5. TO BE MEASURED WITHIN 2mm FROM -A-
6. IN COUPLING WITH THE PLUG HOUSING MATING FORCE 29.4N MAX. WITHOUT RECEPTACLE CONTACTS.

THIS DRAWING IS A CONTROLLED DOCUMENT.

TOLERANCE UNLESS OTHERWISE SPECIFIED: 一般公差
0<x≦ 10 : ±0.2
10<x≦ 30 : ±0.25
30<x≦100 : ±0.3
ANGLE ; ±3°
角度

DIMENSIONS: mm

TOLERANCES UNLESS OTHERWISE SPECIFIED:
0 PLC ±–
1 PLC ±–
2 PLC ±–
3 PLC ±–
4 PLC ±–
ANGLES ±–

MATERIAL: HOUSING: 66NYLON; TAB CONTACT: BRASS
FINISH: SEE TABLE

DWN	K.YUASA	7/21'92
CHK	K.YUASA	7/21'92
APVD	A.TOMITA	7/21'92
PRODUCT SPEC	SEE NOTE 4	
APPLICATION SPEC	—	
WEIGHT	—	

TE Connectivity

NAME: MULTI-INTERLOCK CONNECTOR 21P VERTICAL TYPE CAP HOUSING ASSEMBLY

SIZE	CAGE CODE	DRAWING NO	RESTRICTED TO
A3	00779	C-171457	—

CUSTOMER DRAWING | SCALE 1:1 | SHEET 1 OF 1 | REV K2

1470-19 (3/11)