NOTES: UNLESS OTHERWISE SPECIFIED.

1. ALL DIMENSIONS ARE IN MM.
   TOLERANCES TO BE ±0.5 MM.
2. PARTS SPECIFIED AS FOLLOWS:
2-1. ENCLOSURE:
   * MEET V-0 FLAMMABILITY.
   *COLOR:BLACK.
   * TEXTURE: MOLDTECH MT11020.
2-2. AC INLET:
   * IEC 320, C14 CERTIFIED, 3 WAY.
   * COLOR: BLACK.
2-3. DC OUTPUT:
   * PLUG SHAPE: 4 PIN PLUG TYPE
   * PLUG INSULATOR: BLACK
   * PLUG POLARITY:

P1 , P2	(+)
P3,P4,SHELL	(-)

   * COLOR: BLACK.
2-4. ADAPTOR UNIT:
   * DIMENSIONS MARKED * MARK MUST BE INSPECTED & CONTROLLED STRICTLY BY OQC.

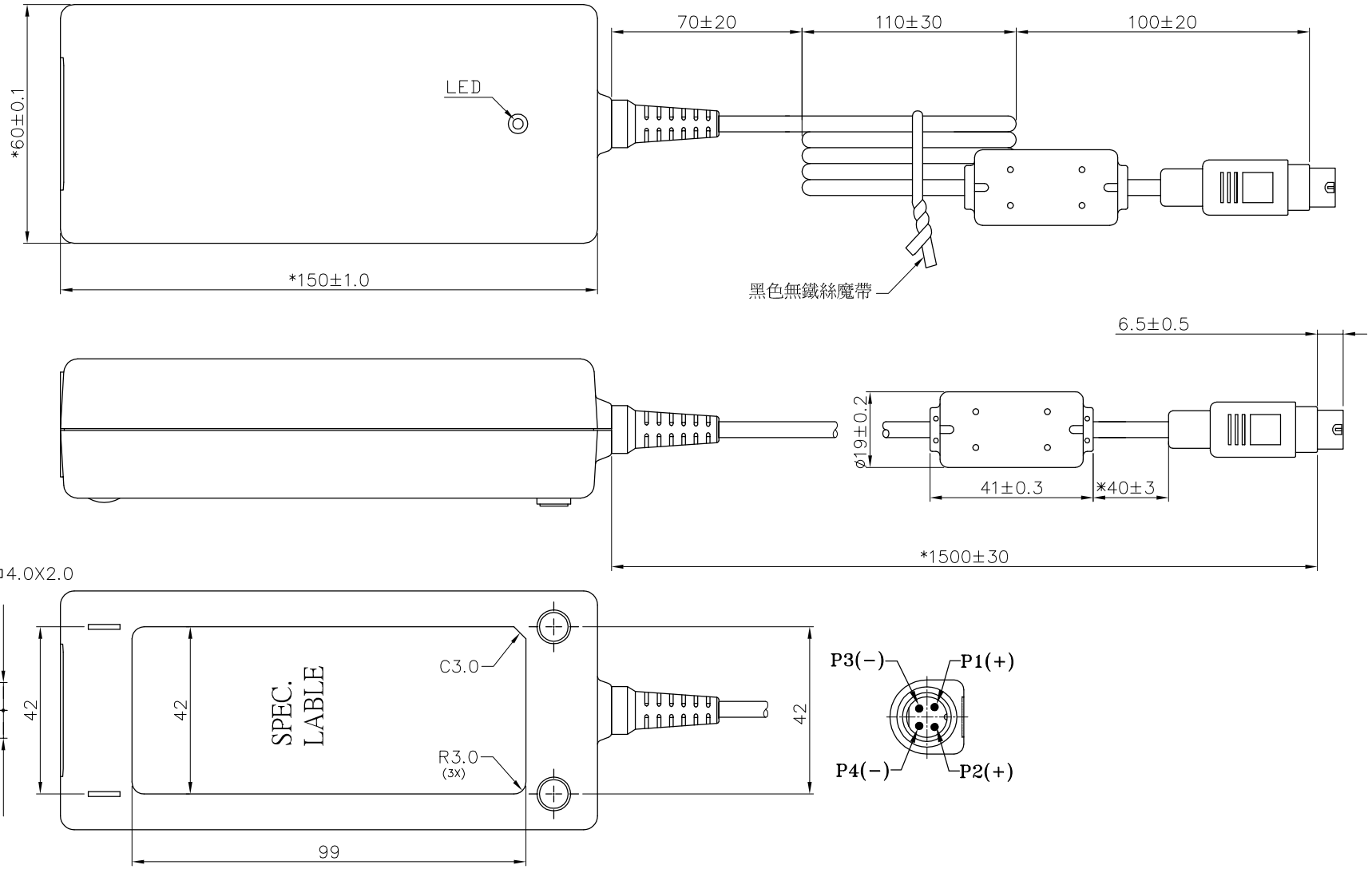

REVISION	DESCRIPTION	DATE	ZONE
A0	release	15 JAN 2009	

PRINTING DATE	2009/10/01	2D FILE	PA-1081-01LT-LF-PD(785008)
FINAL DATE	2009/10/01	3D FILE	
UNIT: mm	SCALE:		

DESIGNER: Felix
CHECKER: Felix
APPROVED: Brian

LITEON

TITLE: OUTLINE
PROJECT: PA-1081-01LT-LF
PART NO: ----------
DRAWING NO: ----------
REV: A